NASA TECH BRIEF

NASA Tech Briefs are issued to summarize specific innovations derived from the U.S. space program, to encourage their commercial application. Copies are available to the public at 15 cents each from the Clearinghouse for Federal Scientific and Technical Information, Springfield, Virginia 22151.

Program Computes Single-Point Failures in Critical System Designs

The problem:

To devise a method for analyzing the designs of critical systems that will either prove the design is free of single-point failures or detect each member of the population of single-point failures inherent in a system design. A single-point failure is defined as that component failure which can produce an unwanted system output.

The solution:

A computer program which, given the logical model of a system and the model's response in an unfailed mode, will compute the totality of failure effects on a number of selected elements in the system. The computations are performed element by element, system state by system state, until the history of the system has been exhausted. All single-point failures are printed out.

How it's done:

This program detects the single-point failures of a logical system that is representable as variable state constraints within the set of Boolean equations that model the system. A Boolean simulation of the system and the computation of its history in an unfailed operating mode must have been previously computed and recorded on tape. These data are essential input to the program and are generated by a Boolean simulation program which provides the history as a sequence of state vectors.

In order for the recorded history to be compatible with the single-point failure program, the elements of the logical model must be ordered for Boolean simulation such that the elements to be failed are dense on the "tail", or right end, of the state vector. This ordering is accomplished by an equation translator program. This program takes, as input, an ordered list of names of the logical elements together with the Boolean model in terms of the names, and produces, as output, the set of equations in terms of element numbers. This output and the taped history are compatible for processing by the single-point failure program.

The single-point failure program will test a maximum of 24 elements in the system. The unfailed history of the logical system represents "nominal data" to which the computed state vectors are compared in determining the consequences of component failure.

The computer fails an element by changing and freezing its logical state, computing its effect on the rest of the sample elements (checking to see whether the failed element causes any of the other sample elements to change state), and then printing out the differences between the computed state vector and the state vector of the unfailed system. After each computation, the state of the system is reset to the unfailed state so that the next failure computation can be made. This process proceeds, element by element, system state by system state, until the history of the system has been exhausted.

Notes:

1. This program should find application in the checkout of redundant circuits and digital systems.
2. The system size is restricted to 999 elements.
3. If more than 24 sampling elements must be monitored for state alteration, the sampling elements may be grouped in lots of less than or equal to 24 and the program executed for each group.
4. Inquiries concerning this innovation may be directed to:

   COSMIC
   Computer Center
   University of Georgia
   Athens, Georgia 30601
   Reference: B67-10001

(continued overleaf)

This document was prepared under the sponsorship of the National Aeronautics and Space Administration. Neither the United States Government nor any person acting on behalf of the United States Government assumes any liability resulting from the use of the information contained in this document, or warrants that such use will be free from privately owned rights.

Patent status:

No patent action is contemplated by NASA.

Source: W. R. Brown of
North American Aviation, Inc.
under contract to
Manned Spacecraft Center
(MSC-603)

NASA TECH BRIEF

NASA Tech Briefs are issued to summarize specific innovations derived from the U.S. space program, to encourage their commercial application. Copies are available to the public at 15 cents each from the Clearinghouse for Federal Scientific and Technical Information, Springfield, Virginia 22151.

Computer Program Detects Transient Malfunctions in Switching Circuits

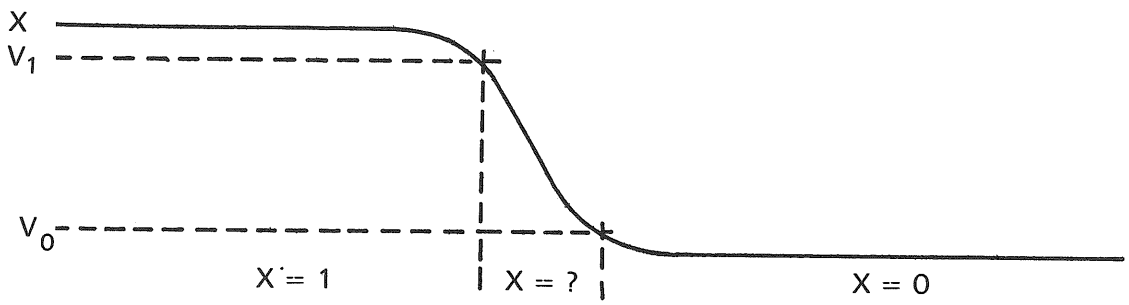

The problem:

To devise a computer program that will determine the response of large combinational and sequential switching circuits to given input changes, taking into account any malfunctions due to races, hazards, and oscillations, and flagging these as they occur. (Races, hazards, and oscillations are defects that occur in circuits while switches or relays are in the transient state between their two stable states). Other programs do not take into account malfunctions due to races and hazards, necessitating tedious manual analysis of the circuit to locate them.

The solution:

A new program which accepts a system model in the form of Boolean equations and solves these equations using a ternary algebra. This application of ternary algebra to the solution of Boolean equations introduces a third or indeterminate state between the "on" and "off" states of binary algebra.

How it's done:

Although ideal binary variables can take on only two values, the "binary" transition in an electronic circuit is actually a continuous function, as shown in the figure, rather than a discrete one. The variable x in the figure is considered to be a 1 when it is above V_1 and a 0 when it is below V_0. During the time the signal is between V_0 and V_1, its value is said to be indeterminate and could be either a 0 or a 1. In fact, it could simultaneously affect one logic gate as a 1 and another as a 0, depending on the electrical characteristics of the gates. Electromechanical devices also experience transient behavior in that relay contacts are indeterminate during the time the relay is operating or releasing. The effects of unexpected transient behavior are particularly evident in electronic devices where secondary response time is on the order of signal propagation time.

Basically, ternary simulation operates in the following manner: When an input variable is to change

(continued overleaf)

This document was prepared under the sponsorship of the National Aeronautics and Space Administration. Neither the United States Government nor any person acting on behalf of the United States Government assumes any liability resulting from the use of the information contained in this document, or warrants that such use will be free from privately owned rights.

states, say from 0 to 1, it is first set to the indeterminate state. The equations for the system are then solved using ternary algebra to allow the effects of the indeterminate state to be propagated throughout the logic system. The input transition is completed by setting the input variable to its final state (1) and again solving the equations. When a set of variables in the logic system remains in the indeterminate state, a race has occurred. When a variable is in the 0 (1) state before an input transition, goes to the indeterminate state during the input transition, and returns to the 0 (1) state upon completion of the transition, the possibility of a static hazard exists.

In analyzing the circuit, the program provides a step-by-step account of the states of all elements. In addition, the program has the ability to solve the equations selectively; that is, when an element changes state, only those equations affected by the change are solved.

Notes:

1. Ternary simulation is just as applicable to solid-state switching circuits as it is to relay type circuits, and should thus be of interest to manufacturers for analyzing any type of electronic switching circuits.
2. Inquiries concerning this innovation may be directed to: COSMIC
   Computer Center
   University of Georgia
   Athens, Georgia 30601
   Reference: B67-10002

Patent status:

No patent action is contemplated by NASA.

Source: Edward L. Calvin of
North American Aviation, Inc.
under contract to
Manned Spacecraft Center
(MSC-604)

NASA TECH BRIEF

NASA Tech Briefs are issued to summarize specific innovations derived from the U.S. space program, to encourage their commercial application. Copies are available to the public at 15 cents each from the Clearinghouse for Federal Scientific and Technical Information, Springfield, Virginia 22151.

Self-Starting Procedure Simplifies Numerical Integration

The problem:

To devise a self-starting, multistep procedure for the numerical integration of ordinary differential equations. Most multistep methods are not self-starting, and single step methods such as that of Runge-Kutta are used to obtain starting values for the integration. This requires nonesssential tallying to determine enough starting values.

The solution:

The classical, multistep, predictor-corrector procedures for the numerical solution of systems of ordinary differential equations are generalized to provide compatible, self-starting methods that produce all the required backward differences directly from the initial equations. Explicit algorithms and tables of numerical coefficients are given for starting and continuing the numerical integration of the equations.

How it's done:

The general problem is to devise algorithms for calculating x_n, y_n, and f_n [where $x_n=x(t_n)$, $y_n=y(t_n)$, and $f_n=f(x_n, y_n, t_n)$] for $n=1, 2, 3, \ldots$, given the differential equations $dx/dt=y$ and $dy/dt=f(x, y, t)$ and the initial values $x_o=x(t_o)$ and $y_o=y(t_o)$. The theory for first order systems is obtained by ignoring x in these equations. The procedure used is the conventional one of approximating the function (f) by a polynomial t of degree q.

In order to achieve the best compromise between the requirements of speed, accuracy, and programming compactness, the following procedures are used in the integration:

I. Fourth order methods are used for first order equations (q=4) and sixth order methods are used for second order equations (q=6).

II. The iterated starter, which initializes the algorithms and then iterates the single set of equations, is used and iterated eight times. The iterated starter is superior to a "bootstrap" starter (essentially an efficient way of obtaining first approximations in the right hand side of the algorithms) because the "bootstrap" starter, although efficient in practice, is awkward and space-consuming when programmed for automatic computers due to the multiplicity of algorithms and matrices required.

III. The summed form of the predictor–corrector algorithm is used in backward-difference form. The effectiveness of the summed form of the predictor–corrector formula has long been known to astronomers. The use of backward differences in the forward integration is preferable to the use of backward ordinates for two reasons: (1) the backward ordinate formula tends to add nearly equal quantities of alternating sign, whereas the backward-difference formula adds monotonically decreasing quantities; and (2) the availability of the difference tables makes error estimation and automatic adjustment of the interval size a straightforward procedure.

IV. Four extra significant decimal digits are carried, in floating-point form, to control round-off errors.

Note:

Further information concerning this innovation is presented in NASA TN D-2936, "Self-Starting Multistep Methods for the Numerical Integration of Ordinary Differential Equations" by William A. Mersman, July 1965, available from the Clearinghouse for

(continued overleaf)

This document was prepared under the sponsorship of the National Aeronautics and Space Administration. Neither the United States Government nor any person acting on behalf of the United States Government assumes any liability resulting from the use of the information contained in this document, or warrants that such use will be free from privately owned rights.

Federal Scientific and Technical Information, Springfield, Virginia 22151; price $2.00. Inquiries may also be directed to:

Technology Utilization Officer
Ames Research Center
Moffett Field, California 94035
Reference: B67-10013

Patent status:

No patent action is contemplated by NASA.

Source: (ARC-50)

NASA TECH BRIEF

NASA Tech Briefs are issued to summarize specific innovations derived from the U.S. space program, to encourage their commercial application. Copies are available to the public at 15 cents each from the Clearinghouse for Federal Scientific and Technical Information, Springfield, Virginia 22151.

Aluminized Thin-Window Proportional-Counter Tube Is Stronger, More Responsive in Long Wavelength Region

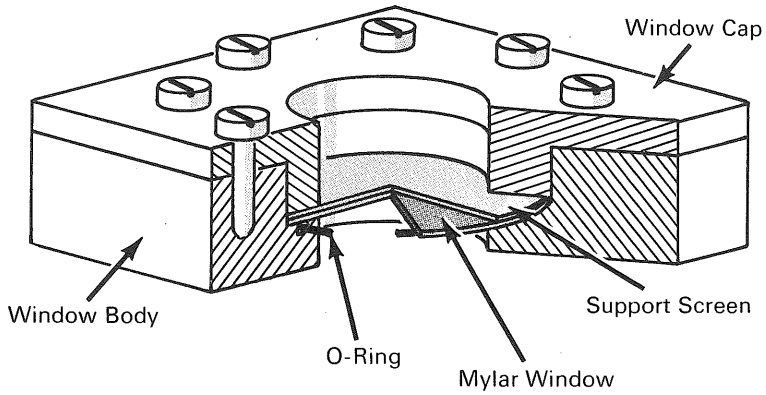

The problem:

To devise a thin-window proportional counter tube for long-term use in space, or other demanding environments, which permits the efficient detection of long wavelength X-rays out in the 12–15 Å region. The thin window contains an ionizing gas for counter operation in the vacuum of outer space while simultaneously realizing useful sensitivity to long wavelength X-rays. Prior art used a thin window of mica which was not sufficiently rugged and its response in the long wavelength region was impaired.

The solution:

A thin window of 0.25-mil Mylar with a very thin aluminum coating on one side.

How it's done:

A piece of 0.25-mil Mylar is vacuum coated with a thickness of aluminum. Absorption tests are performed to make certain that the Mylar is leak free and still gives reasonable transmission for Na Kα X-rays. A window support screen of etched nickel, 0.001-inch thick and 40 wires per inch, is cemented to the compression surface of the window cap with a small amount of commercial potting compound. A thin film of vacuum grease is applied to the window cap over which is placed the aluminized Mylar with the aluminum surface toward the inside of the tube. The O-ring is lightly greased before it is placed in its groove. With the aluminized Mylar held in place by the vacuum grease, the window cap is tightened against the window body.

Notes:

1. Possible applications include oceanography, some types of scientific laboratory work, and geologic exploration.

(continued overleaf)

This document was prepared under the sponsorship of the National Aeronautics and Space Administration. Neither the United States Government nor any person acting on behalf of the United States Government assumes any liability resulting from the use of the information contained in this document, or warrants that such use will be free from privately owned rights.

2. Additional construction and test details are contained in Technical Memorandum No. 33-221, "A Ruggedized Thin Window Proportional Counter Tube", by H. W. Schnopper and R. A. Shields, Jet Propulsion Laboratory, September 15, 1965, which is available from:

   Technology Utilization Officer
   Jet Propulsion Laboratory
   4800 Oak Grove Drive
   Pasadena, California 91103
   Reference: B67-10015

Patent status:

Inquiries about obtaining rights for the commercial use of this invention may be made to NASA, Code GP, Washington, D.C. 20546.

Source: H. W. Schnopper, Cornell University
and R. A. Shields
Jet Propulsion Laboratory
(JPL-689)

NASA TECH BRIEF

NASA Tech Briefs are issued to summarize specific innovations derived from the U.S. space program, to encourage their commercial application. Copies are available to the public at 15 cents each from the Clearinghouse for Federal Scientific and Technical Information, Springfield, Virginia 22151.

Shortened Horn-Reflector Antenna

A shortened horn-reflector antenna was designed to overcome the mechanical disadvantages and complexity of the conventional horn-reflector antenna.

The shortened horn-reflector antenna is a modification of the conventional horn-reflector antenna in which the horn is replaced by a hyperboloidal subreflector, and Cassegrainian feeding is used. The shortened antenna offers broadband performance, economic construction, very low antenna temperature, and excellent pattern performance. A comparison of the performance of a model having a 6-foot aperture with that of a conventional horn-reflector antenna is given below. It is assumed that both antennas are operated with a receiver having a temperature of 25°K, at C-band frequencies, and with feed line losses of 0.20 dB.

	Shortened Antenna	Conventional Antenna
Aperture efficiency	65 percent	55 percent
Antenna temperature	6°K	40°K
Figure of merit	1.7 dB	−1.46 dB

Note:

Inquiries concerning this innovation may be directed to:

Technology Utilization Officer
Goddard Space Flight Center
Greenbelt, Maryland 20771
Reference: B67-10017

Patent status:

No patent action is contemplated by NASA.

Source: Paul A. Lantz
(GSFC-502)

Category 01

This document was prepared under the sponsorship of the National Aeronautics and Space Administration. Neither the United States Government nor any person acting on behalf of the United States Government assumes any liability resulting from the use of the information contained in this document, or warrants that such use will be free from privately owned rights.

NASA TECH BRIEF

NASA Tech Briefs are issued to summarize specific innovations derived from the U.S. space program, to encourage their commercial application. Copies are available to the public at 15 cents each from the Clearinghouse for Federal Scientific and Technical Information, Springfield, Virginia 22151.

Tester for Study of Rolling Element Bearings

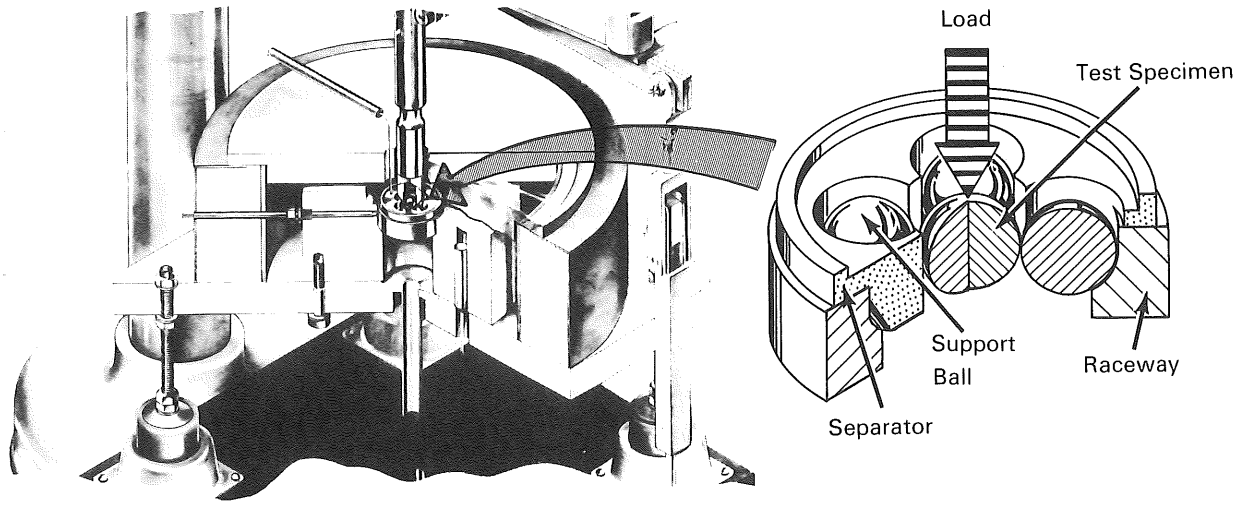

The problem:

To design a test device for the study of rolling element phenomena including rolling-element (bearing) fatigue, ball-bearing kinematics and elastohydrodynamic lubrication at temperatures from −300° to 2000°F.

The solution:

A five-ball fatigue tester consisting essentially of a driven test ball pyramided upon four lower balls positioned by a separator and free to rotate in an angular contact raceway. With each revolution of the drive shaft, the upper ball receives three stress cycles. The upper test ball and the raceway are analogous in operation to the inner and outer races, respectively, of a bearing. The separator and the lower balls function in a manner similar to the cage and the balls of a bearing.

How it's done:

The test specimen assembly comprises the upper test ball specimen pyramided upon the four lower test ball specimens which are positioned in the angular contact raceway by the separator. Specimen loading and drive is supplied through a vertical shaft. By varying the pitch diameter of the four lower balls, bearing contact angle may be controlled.

The test specimen assembly is fitted in a housing containing a plurality of cartridge type heaters for obtaining test temperatures to 1000°F. The housing is supported by rods held in flexible rubber mounts. The rods provide for alignment of the raceway and four lower balls with the upper test ball and drive shaft, and the flexible rubber mounts dampen vertical oscillations of the drive shaft created by vibration. Such vibrations, if not dampened, will increase the stress

(continued overleaf)

This document was prepared under the sponsorship of the National Aeronautics and Space Administration. Neither the United States Government nor any person acting on behalf of the United States Government assumes any liability resulting from the use of the information contained in this document, or warrants that such use will be free from privately owned rights.

level of the ball specimen, thus influencing fatigue-life results.

Choice of test-specimen rotative speed is provided through step pulleys driven by an electric motor. A magnetic pickup feeding an electronic counter provides for precise speed measurement. Ambient temperature is measured with a thermocouple in contact with the raceway containing the freely rotating lower balls. The test specimen is lubricated by metering droplets of fluid lubricants into an air stream directed at the test specimen.

Modifications of this apparatus have been made permitting fatigue testing at temperatures ranging from −300° to 2000°F, and testing of full scale bearings. The use of a failure detection and shutdown system have made long term unmonitored tests possible.

Notes:

1. This device should be useful in testing and research of bearings, bearing materials, and lubricants through a wide range of controlled variable conditions.
2. Additional information concerning this innovation is given in NASA TN D-259, "Rolling-Contact Fatigue Life of a Crystallized Glass Ceramic," by Thomas L. Carter and Erwin V. Zaretsky, and NASA TN D-270, "Effect of Hardness and Other Mechanical properties on Rolling-Contact Fatigue Life of Four High Temperature Bearing Steels," by Thomas L. Carter, Erwin V. Zaretsky and William J. Anderson, available from the Clearinghouse for Federal Scientific and Technical Information, Springfield, Virginia 22151. Inquiries may also be directed to:

   Technology Utilization Officer
   Lewis Research Center
   21000 Brookpark Road
   Cleveland, Ohio 44135
   Reference B67-10009

Patent status:

No patent action is contemplated by NASA.

Source: Erwin V. Zaretsky et al.
(Lewis-305)

NASA TECH BRIEF

NASA Tech Briefs are issued to summarize specific innovations derived from the U.S. space program, to encourage their commercial application. Copies are available to the public at 15 cents each from the Clearinghouse for Federal Scientific and Technical Information, Springfield, Virginia 22151.

Miniature Capacitor Functions as Pressure Sensor

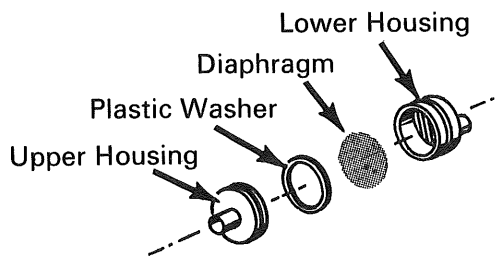

ACTUAL SIZE

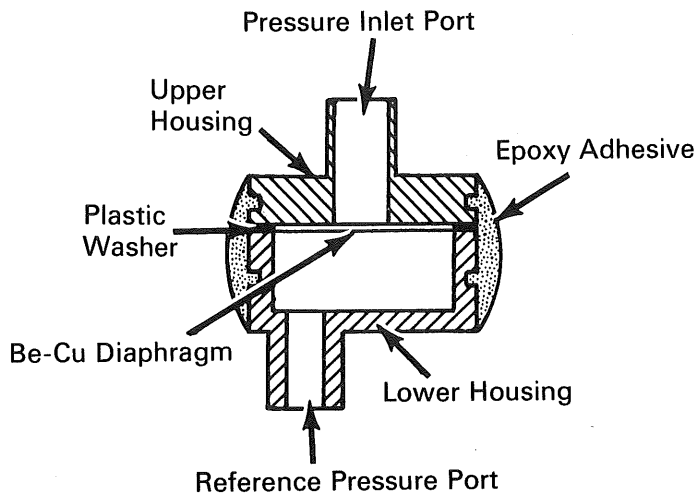

The problem:

To devise a miniature capacitor that will operate reliably as a differential-pressure telemetry sensor over wide ranges of pressure, temperature, and acceleration encountered during free flight of an instrumented test model in a hypersonic continuous-flow wind tunnel.

The solution:

A capacitor incorporating a beryllium copper diaphragm that produces a variation in capacitance as a function of the pressure applied to one face of the diaphragm relative to a reference pressure applied to the opposite face.

How it's done:

The actual size of the unit (exploded view) and the construction details (sectional view) are shown in the illustrations. The diaphragm is secured to the rim of the lower housing by means of a low-melting solder in a specially designed fixture. This subassembly and electrically insulating washer are then fitted to the upper housing and aligned in another specially designed fixture. An epoxy adhesive is used to hold the assembly together and provide a pressure seal at the seam.

When the respective pressures are applied to the inlet and reference ports, the diaphragm moves slightly and correspondingly changes the capacitance of the unit in response to the pressure difference. The capacitance is measured between the upper and lower housings connected to the tank circuit of a telemetry oscillator.

Notes:

1. The capacitor is capable of withstanding an overpressure of 50 psi and is insensitive to the accelerations and temperatures encountered in a hypersonic wind tunnel. It may also be used as an absolute pressure sensor by sealing the reference port.

(continued overleaf)

This document was prepared under the sponsorship of the National Aeronautics and Space Administration. Neither the United States Government nor any person acting on behalf of the United States Government assumes any liability resulting from the use of the information contained in this document, or warrants that such use will be free from privately owned rights.

2. The units can be easily produced within close capacitance tolerances using the specially designed assembly fixtures.
3. Capacitors of this design can be used for remote measurement of rapid as well as slow changes in pressure in a variety of applications.
4. Inquiries concerning this invention may be directed to:

   Technology Utilization Officer
   Jet Propulsion Laboratory
   4800 Oak Grove Drive
   Pasadena, California 91103
   Reference: B67-10020

Patent status:

Inquiries about obtaining rights for the commercial use of this invention may be made to NASA, Code GP, Washington, D.C. 20546.

Source: R. G. Harrison
(JPL-903)

NASA TECH BRIEF

NASA Tech Briefs are issued to summarize specific innovations derived from the U.S. space program, to encourage their commercial application. Copies are available to the public at 15 cents each from the Clearinghouse for Federal Scientific and Technical Information, Springfield, Virginia 22151.

Variable-Pulse Switching Circuit Accurately Controls Solenoid-Valve Actuations

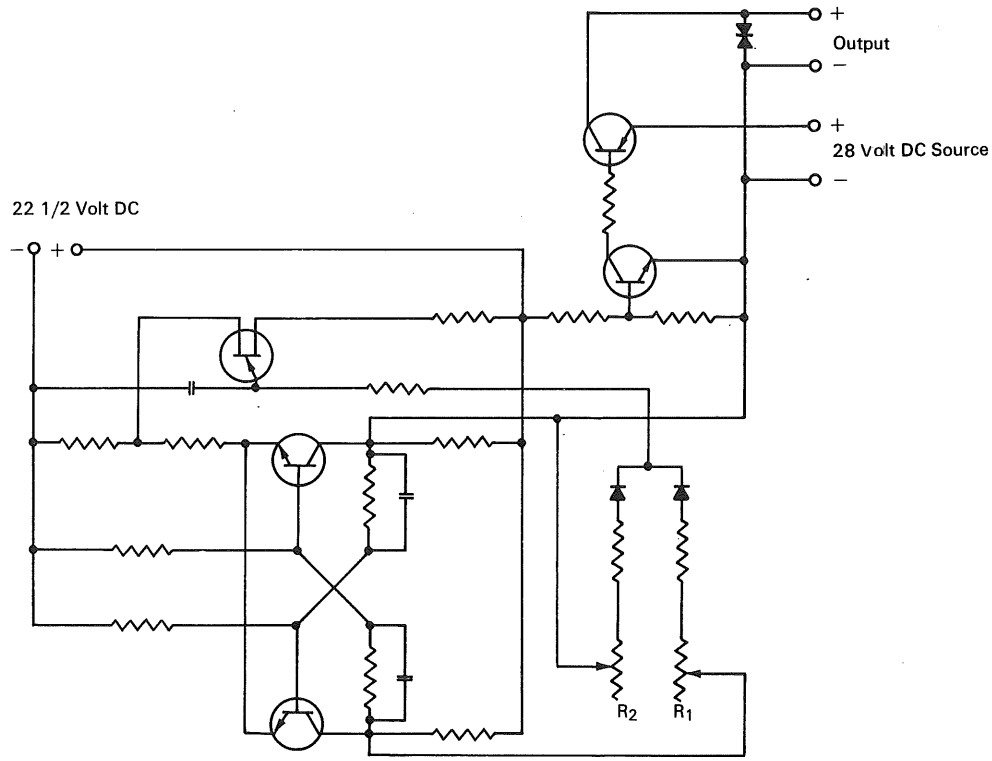

The problem:

To devise an adjustable switching circuit that will operate a 28 volt dc solenoid valve at precise time intervals.

The solution:

A solid state circuit that generates adjustable square wave pulses of sufficient power to operate a 28 volt dc solenoid valve.

How it's done:

The circuit includes a pulse-forming branch (flip-flop) and sufficient amplification to power the operation of the solenoid valve from a 28 volt dc source. The flip-flop is powered by an independent 22 1/2 volt battery. Pulse width (on time) can be varied over a range of 10 to 40 milliseconds by adjusting potentiometer R_1. Similarly, the interval between pulses (off time) can be varied over a range of 8 to 350 milliseconds by means of R_2.

(continued overleaf)

This document was prepared under the sponsorship of the National Aeronautics and Space Administration. Neither the United States Government nor any person acting on behalf of the United States Government assumes any liability resulting from the use of the information contained in this document, or warrants that such use will be free from privately owned rights.

Notes:

1. This type of circuit has been used in conjunction with a solenoid valve for precise time control of fluid flow in combustion experiments. With a suitable arrangement of relays, the circuit can be used for sequencing of multiple flows in various processes requiring precise timing.
2. Inquiries concerning this invention may be directed to:

   Technology Utilization Officer
   Marshall Space Flight Center
   Huntsville, Alabama 35812
   Reference: B67-10022

Patent status:

Inquiries about obtaining rights for the commercial use of this invention may be made to NASA, Code GP, Washington, D. C. 20546.

Source: J. D. Gillett,
of North American Aviation, Inc.
under contract to
Marshall Space Flight Center
(M-FS-1895)

NASA TECH BRIEF

NASA Tech Briefs are issued to summarize specific innovations derived from the U.S. space program, to encourage their commercial application. Copies are available to the public at 15 cents each from the Clearinghouse for Federal Scientific and Technical Information, Springfield, Virginia 22151.

Computer/PERT Technique Monitors Actual Versus Allocated Costs

A computerized method has been developed to measure the user's performance in cost-type contracts with a "cost-index-of-work-accomplished" technique. This utilizes the existing NASA PERT (Program Evaluation Review Technique) without imposing any additional reporting requirements upon the user. A cost index is calculated monthly that compares the user's actual incurred costs with baseline allocated costs. The allocated costs result from a reasonable distribution or allocation of the user's initial cost proposal dollars to activities reflecting this proposal in PERT fragnets. After this initial allocation, the computer calculates with each normal PERT time updating, the allocated costs, or the total-resources-allocated-for-work-accomplished (similar to value of work performed) through the report date.

At the start a fragnet is designed that represents the events, activities, and allocated activity times in graphic form. As the next step, the user's dollar allocation is divided among the activities shown in the fragnet by standard NASA cost distribution practices plus specific unit costs obtained from the user's detailed cost proposal. These dollar allocations are keypunched into the resource columns of NASA PERT activity cards and the cards are fed to the computer. The resultant printout is a resource report at project start—a dollar distribution by fiscal month, quarter, and year. At regular reporting periods, the user submits adjusted cost data on expenditures in time and dollars per activity and the NASA PERT activity cards are updated accordingly. Each subsequent computer printout, therefore, reflects the progress by comparison of the actual costs with a value of work performed through that specific reporting period.

Notes:

1. A copy of the computer program involved may be obtained by forwarding a reel of IBM compatible magnetic tape to the below address.
2. Inquiries concerning this innovation may be directed to:

   Technology Utilization Officer
   Lewis Research Center
   21000 Brookpark Road
   Cleveland, Ohio 44135
   Reference: B67-10025

Patent status:

No patent action is contemplated by NASA.

Source: Joseph D. Walker
and Edward Houry
(Lewis-260)

Category 01

This document was prepared under the sponsorship of the National Aeronautics and Space Administration. Neither the United States Government nor any person acting on behalf of the United States Government assumes any liability resulting from the use of the information contained in this document, or warrants that such use will be free from privately owned rights.

AEC-NASA TECH BRIEF

AEC-NASA Tech Briefs describe innovations resulting from the research and development program of the U.S. AEC or from AEC-NASA interagency efforts. They are issued to encourage commercial application. Tech Briefs are published by NASA and may be purchased, at 15 cents each, from the Clearinghouse for Federal Scientific and Technical Information, Springfield, Virginia 22151.

Feed-Through Connector Couples RF Power into Vacuum Chamber

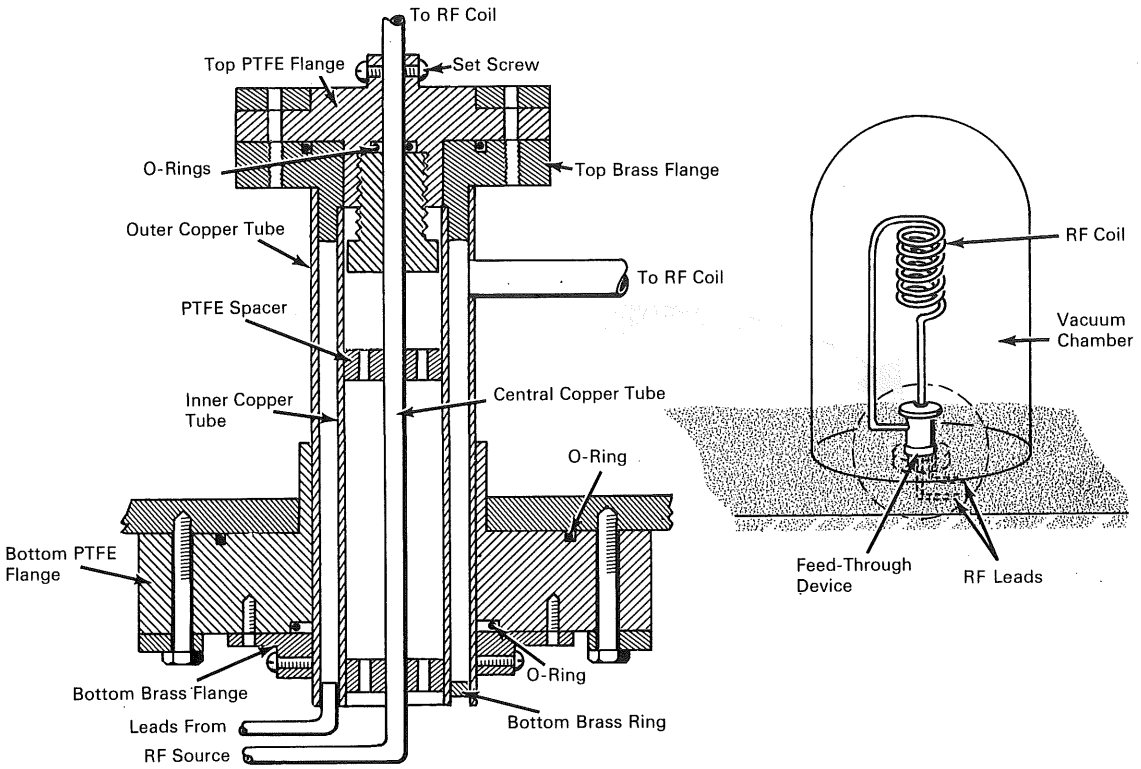

The problem:

To design a feed-through device for connecting rf power to an rf coil in a vacuum chamber (at pressures in the range of 10^{-4} to 10^{-5} mm of mercury). The coil and leads must be water cooled and vacuum tight seals provided at the junctions of the feed-through device, leads, and vacuum chamber.

The solution:

A feed-through device incorporating silver soldered copper tubes, PTFE (polytetrafluoroethylene) electrical insulators, and O-ring vacuum seals.

How it's done:

The basic component is an annular cylindrical cavity formed by silver soldering copper tubes (inner and outer copper tubes) to brass end pieces (top brass flange, bottom brass flange, and bottom brass ring). The top PTFE flange, vacuum sealed by O-rings, supports and electrically insulates the central tubular conductor, which is secured to the PTFE flange by set screws. The device protrudes into the vacuum chamber and is electrically insulated from it by the bottom PTFE flange, which is fitted with O-rings for

(continued overleaf)

This document was prepared under the sponsorship of the Atomic Energy Commission and/or the National Aeronautics and Space Administration. Neither the United States Government nor any person acting on behalf of the United States Government assumes any liability resulting from the use of the information contained in this document, or warrants that the use of any information, apparatus, method, or process disclosed in this document may not infringe privately owned rights.

vacuum tight sealing. Water or other appropriate fluid can be circulated through the tubular conductors for cooling the device.

Note:

Inquiries concerning this innovation may be directed to:

Technology Utilization Officer
AEC–NASA Space Nuclear Propulsion Office
U.S. Atomic Energy Commission
Washington, D.C. 20545
Reference: B67-10027

Patent status:

No patent action is contemplated by AEC or NASA.

Source: G. L. Grandy
of Westinghouse Astronuclear Laboratory
under contract to
AEC–NASA Space Nuclear Propulsion Office
(NU-0096)

NASA TECH BRIEF

NASA Tech Briefs are issued to summarize specific innovations derived from the U.S. space program, to encourage their commercial application. Copies are available to the public at 15 cents each from the Clearinghouse for Federal Scientific and Technical Information, Springfield, Virginia 22151.

Monitor Assures Availability and Quality of Communication Channels

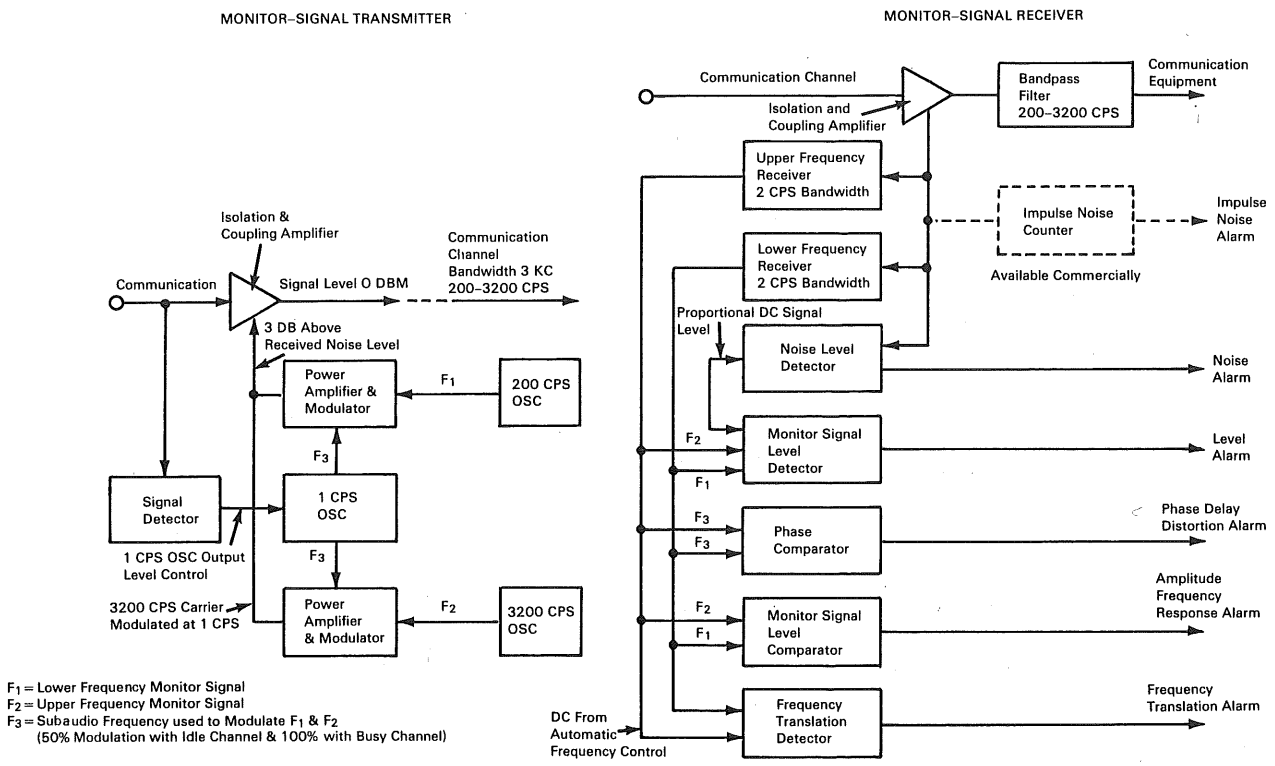

The problem:

To devise a monitoring system that continuously monitors a communication channel for proper circuit parameters and energizes an alarm if these parameters do not fall within allowable limits. The system must assure the availability and quality of a communication channel, whether in use or idle. It must determine when an idle channel has been interrupted or has deteriorated below usable standards, and it must monitor channel quality during circuit use. Although quality monitoring devices are commercially available and in general use for telegraph and low speed digital circuits, they cannot monitor channels carrying voice or other signals that contain many random frequencies. Also, they cannot monitor all the critical parameters of voice and high speed data circuits.

The solution:

A monitor system that comprises a monitor-signal transmitter at the transmitting end of the channel and a monitor-signal receiver at the receiving end;

(continued overleaf)

This document was prepared under the sponsorship of the National Aeronautics and Space Administration. Neither the United States Government nor any person acting on behalf of the United States Government assumes any liability resulting from the use of the information contained in this document, or warrants that such use will be free from privately owned rights.

the monitor-signal transmitter generates two amplitude-modulated signals that are within the communications channel frequency band, one at the low frequency end and the other at the high-frequency end. The monitor-signal receiver detects the transmitted monitor signal and measures its power level, phase delay, frequency amplitude response, and degree of modulation. An alarm sounds if any of these measurements do not fall within normal limits.

How it's done:

Transmitter oscillators generate the upper and lower frequencies, F_1 and F_2, which are used to monitor channel quality. The 200- and 3200-cps oscillators are typical frequencies only. F_1 and F_2 are amplitude modulated by F_3, the output of the subaudio frequency oscillator. A communication signal detector controls the modulating output of this oscillator. During transmissions, the detector increases the output (F_3) of the oscillator. This increased output is detected at the receiver, thereby establishing that the communication channel is in use.

The power amplifiers and modulators isolate the oscillators from outside influence and permit amplitude modulation without frequency modulation. The isolation and coupling amplifier isolates the amplitude modulated monitor signals from the communications equipment and couples the monitor signal to the communications channel. It also provides for manual adjustment of the transmitted monitor-signal level.

At the monitor-signal receiver, the two monitor signals are separated and demodulated by the upper frequency and lower frequency receivers. The demodulated outputs of each receiver (F_1 and F_3; F_2 and F_3) are fed to the monitor-signal detectors and comparators.

The monitor-signal level detector adds the average power level of the upper and lower monitor frequencies (F_1 and F_2) to indicate communications channel signal level and also channel failure (zero-level condition). It also detects when the channel is in use by measuring the power level of the subaudio frequency modulation (50%, idle; 100%, in use). When this increase in modulation is detected, the level detector feeds a dc signal to the noise level detector, indicating the channel is in use.

The noise detector actuates its alarm at levels slightly greater than normal idle circuit noise. When the communication channel is in use, the dc signal from the monitor-signal level detector reduces the gain of the noise detector to prevent the communication signal from actuating the alarm.

The phase comparator compares the phase angle between the subaudio frequency outputs (F_3) of the upper and lower frequency receivers. These outputs are the same frequency, but one has been transmitted by the communication channel as a frequency below the signal band and the other as a frequency above it. Since these upper and lower frequencies started with their modulation in phase, from the same subaudio frequency oscillator, any phase difference at the receiver is a measure of the phase-delay distortion of the commercial channel.

The monitor-signal level comparator compares the received power level of the upper- and lower-frequency monitor signals (F_1 and F_2) and thus measures frequency distortion.

The frequency translation detector operates from the AFC error signal generated in the upper- and lower-frequency receivers. An alarm is sounded when this error signal exceeds a predetermined amount.

The bandpass filter removes the monitor-signal frequencies from the communication channel to prevent their interfering with channel use. This filter will not be necessary if the level of the monitor signal can be low enough that it is comparable to the normal channel noise.

Notes:

1. The channel quality monitor can be used in voice and high-speed data channels to assure circuit quality and channel availability. It is especially useful in high priority voice channels which do not carry traffic most of the time, but which must be operational and available immediately. In data circuits, it could signal substandard channel conditions that would ordinarily result in list time and data.
2. Inquiries concerning this invention may be directed to:

   Technology Utilization Officer
   Kennedy Space Center
   Kennedy Space Center, Florida 32899
   Reference: B67-10028

Patent status:

Inquiries about obtaining rights for the commercial use of this invention may be made to NASA, Code GP, Washington, D.C. 20546.

Source: George P. Smith
of the RCA Service Company
under contract to
Kennedy Space Center
(KSC-66-38)

NASA TECH BRIEF

NASA Tech Briefs are issued to summarize specific innovations derived from the U.S. space program, to encourage their commercial application. Copies are available to the public at 15 cents each from the Clearinghouse for Federal Scientific and Technical Information, Springfield, Virginia 22151.

Instrument Sequentially Samples AC Signals from Several Accelerometers

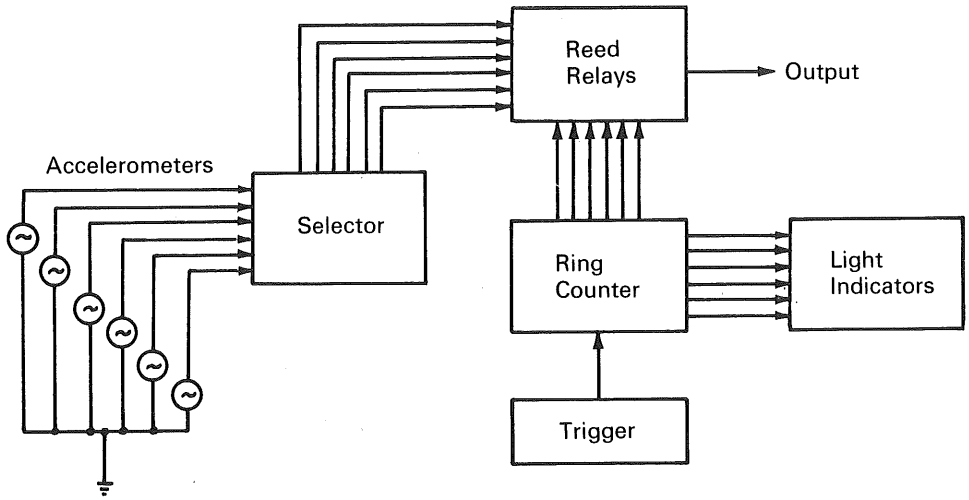

The problem:

In conducting random noise vibration tests using several accelerometers to obtain a representative measurement of the vibration levels over the entire test structure, it is necessary to provide a means for sampling each of the accelerometer signals in such a manner that all of the frequency information is preserved.

The solution:

A scanner circuit that sequentially samples the ac signals from the accelerometers and provides an essentially time-averaged output signal.

How it's done:

A main unit of the scanner is a modified ring counter employing silicon controlled rectifiers to actuate magnetically shielded, mercury wetted reed relays. A unijunction transistor is used as the active element of a sawtooth generator that provides a trigger pulse to switch the counter. The pulse duration and repetition rate are adjustable to permit a sampling rate from less than 1 Hz to approximately 200 Hz. The number of accelerometer channels to be sequentially sampled can be selected by means of a selector switch on the front panel of the instrument. The direction of sampling (forward or reverse) can be controlled by another switch on the front panel. The sampling can also be stopped on any desired channel, so that only the signal from that channel will be gated through the instrument.

Notes:

1. The output of the scanner has been applied to an automatic equalizer to enable precise control of the vibration levels of a vibration system used for random noise vibration tests on structural specimens. The scanner may also have application in conjunction with devices used for automatic control of vibration levels on motors or other equipment subject to mechanical vibrations.

(continued overleaf)

This document was prepared under the sponsorship of the National Aeronautics and Space Administration. Neither the United States Government nor any person acting on behalf of the United States Government assumes any liability resulting from the use of the information contained in this document, or warrants that such use will be free from privately owned rights.

2. An instrument that will automatically select the peak ac signal from several accelerometers is described in NASA Tech Brief 66-10462. Inquiries may also be directed to:

   Technology Utilization Officer
   Jet Propulsion Laboratory
   4800 Oak Grove Drive
   Pasadena, California 91103
   Reference: B67-10029

Patent status:

Inquiries about obtaining rights for the commercial use of this invention may be made to NASA, Code GP, Washington, D.C. 20546.

Source: Carl P. Chapman
(JPL-884)

NASA TECH BRIEF

NASA Tech Briefs are issued to summarize specific innovations derived from the U.S. space program, to encourage their commercial application. Copies are available to the public at 15 cents each from the Clearinghouse for Federal Scientific and Technical Information, Springfield, Virginia 22151.

Local Measurements in Turbulent Flows Through Cross Correlation of Optical Signals

Various methods for measuring turbulent fluctuations in transonic and supersonic flows (at temperatures ranging from 100° to 3000°K) have been studied in an effort to find suitable instruments which combine the necessary linear and time invariant frequency response with a sufficiently high temporal and spatial resolution. This study shows that a method of measurement based on the cross correlation of optical signals will provide the required characteristics. In this method, two collimated beams of radiation are crossed at the point of interest in the flow, and the power loss of each beam through the flow is measured with two independent photodetectors. Although each detector alone yields only an integrated effect along the entire beam path, the technique of forming a cross correlation between the two detector signals removes the unwanted portions of the signals and yields information about the turbulent properties. An additional possibility offered by the technique is that of measuring the correlation between either different thermodynamic properties or different species concentrations. This measurement, in principle, can be achieved by arranging one beam to be sensitive to one property, while the second detects fluctuations of the other property.

The crossed beam correlation method estimates local power spectra, turbulence scales, convection velocities, and eddy lifetimes with the same data reduction procedures that have been developed for conventional two-point measurements using standard probes. In addition, an area integral of the space-time correlation can be obtained so that "one shot" estimates of forcing functions and true three-dimensional wave number components become possible, avoiding the prohibitively expensive translation of point probes across the source area of interest. Because the optical wavelength can be chosen from any portion of the spectrum, this method appears to offer a versatility and/or selectivity not available with any standard solid probe.

Note:

Inquiries concerning this invention may be directed to:

Technology Utilization Officer
Marshall Space Flight Center
Huntsville, Alabama 35812
Reference: B67-10030

Patent status:

Inquiries about obtaining rights for the commercial use of this invention may be made to NASA, Code GP, Washington, D.C. 20546.

Source: M. J. Fisher

(M-FS-1268)

Category 01

This document was prepared under the sponsorship of the National Aeronautics and Space Administration. Neither the United States Government nor any person acting on behalf of the United States Government assumes any liability resulting from the use of the information contained in this document, or warrants that such use will be free from privately owned rights.

NASA TECH BRIEF

NASA Tech Briefs are issued to summarize specific innovations derived from the U.S. space program, to encourage their commercial application. Copies are available to the public at 15 cents each from the Clearinghouse for Federal Scientific and Technical Information, Springfield, Virginia 22151.

High Transients Suppressed in Electromagnetic Devices

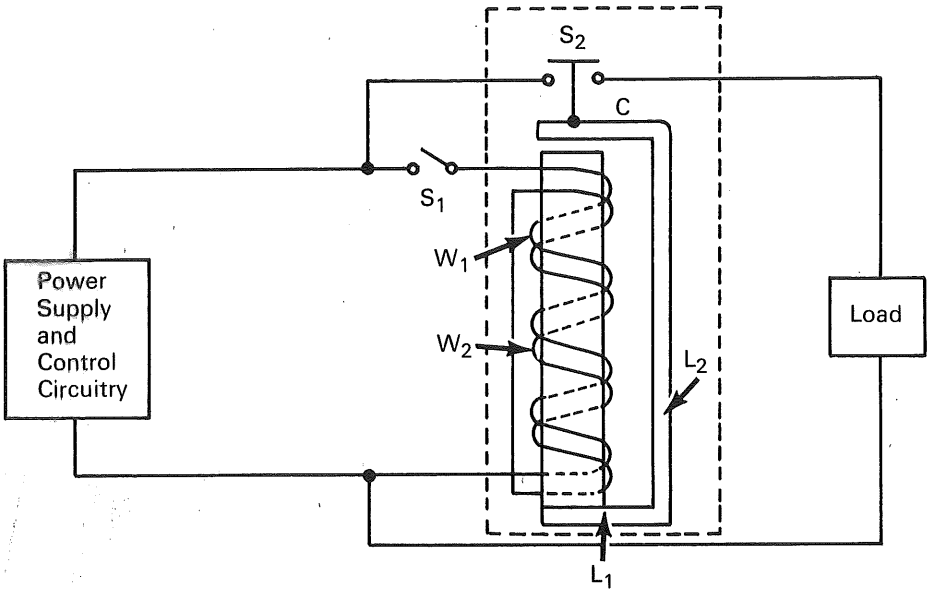

The problem:

In the operation of electromagnetic devices such as relays and solenoids, high transients are caused by rapid field decay upon removal of current to the devices. Previous methods of suppressing these transients have been less than ideal in that they resulted in increased size and weight, polarity dependence, and increases in contact resistance due to outgassing.

The solution:

A bifilar winding around the magnetic core alternately spaced vertically and radially from the core to achieve a high coefficient of coupling.

How it's done:

An actuation winding W_1 about the core is connected to a power supply through a switch S_1. A transient voltage suppression coil W_2 is alternately wound with its ends connected to form a short circuited winding. A leg L_1 projects laterally from the base of the core and has a vertical leg L_2 extending upward to slightly above the top of the core at which point a contact assembly C is spring loaded to extend laterally above the core. A load is connected in series with the device through a switch S_2.

When S_1 is closed, current flows through W_1 creating a strong magnetic field that pulls C down to contact the core at the same time pulling S_2 closed connecting the load to the power supply.

Opening S_1 de-energizes W_1 causing the magnetic field to decay rapidly to produce a transient voltage. The high coefficient of coupling between W_1 and W_2 causes the transient to bleed off through W_2 rather

(continued overleaf)

This document was prepared under the sponsorship of the National Aeronautics and Space Administration. Neither the United States Government nor any person acting on behalf of the United States Government assumes any liability resulting from the use of the information contained in this document, or warrants that such use will be free from privately owned rights.

than seek other dissipative paths. When the magnetic field has decayed sufficiently, spring loaded contact C returns to the horizontal, opening S_2 and removing the load from the power supply.

Notes:

1. This method affords a simple and inexpensive suppression of high transient voltages that would otherwise cause interference in the operation of sensitive components adjacent the electromagnetic device.
2. To control the effect on relay release time, it is only necessary to select the proper wire size for W_2.
3. Inquiries concerning this invention may be directed to:

   Technology Utilization Officer
   Kennedy Space Center
   Kennedy Space Center, Florida 32899
   Reference: B67-10031

Patent status:

This is the invention of a NASA employee and a patent application has been filed. Inquiries concerning license rights may be made directly to the inventor, Mr. Charles Wayne Marion, at Kennedy Space Center, Kennedy Space Center, Florida 32899.

Source: Charles Wayne Marion
(KSC-66-13)

AEC-NASA TECH BRIEF

AEC-NASA Tech Briefs describe innovations resulting from the research and development program of the U.S. AEC or from AEC-NASA interagency efforts. They are issued to encourage commercial application. Tech Briefs are published by NASA and may be purchased, at 15 cents each, from the Clearinghouse for Federal Scientific and Technical Information, Springfield, Virginia 22151.

Thermoelectric Metal Comparator Determines Composition of Alloys and Metals

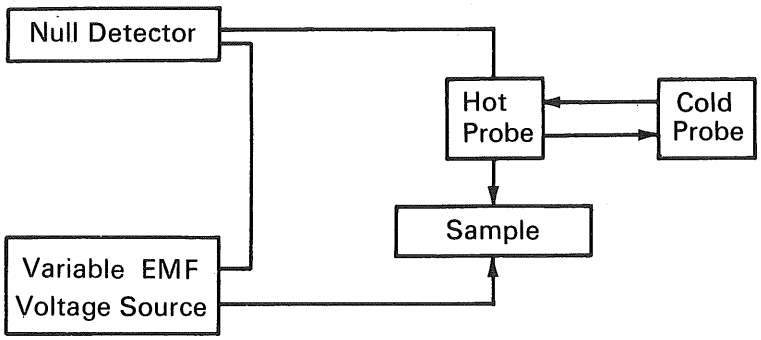

SIMPLIFIED CIRCUIT OF COMPARATOR

The problem:

To nondestructively inspect unknown metals and alloys for conformance to a chemical specification. A device is required to provide more precise and rapid determination than the spark testing technique, and which produces real numerical values that can be reproduced or recorded for future reference.

The solution:

A device which measures the difference in emf produced by the junction of a hot probe and the junction of a cold contact on the surface of an unknown metal. This instrument utilizes the "Seebeck" (thermal electromotive force) effect, where a hot junction between two dissimilar metals produces a characteristic emf, the magnitude of which is dependent on the temperature of the junction and the composition of the metals.

How it's done:

The emf comparing device consists of a voltage source, a null detector, and hot and cold probes. A temperature controller is used to adjust the proper temperature at the hot probe.

The hot junction is made with a heated iron probe held to the surface of the unknown metal, providing what may be considered an infinite heat source in contact with an infinite heat sink. The required temperature of the hot probe is maintained at 350° ±5° F by the temperature controller, with the controlling thermocouple imbedded in an enlarged section of the hot probe itself. The hot junction lead, which is made from the same material as the hot probe, is imbedded in an Armco iron ring or washer which is in tight contact with the hot probe. The cold junction contact consists of a wire made of the same material as the hot probe and the hot junction lead. It is held in contact with the unknown metal sample by a magnet.

An initial null setting is obtained by placing the hot probe in contact with the cold contact. The temperature of the hot probe is then standardized by taking

(continued overleaf)

This document was prepared under the sponsorship of the Atomic Energy Commission and/or the National Aeronautics and Space Administration. Neither the United States Government nor any person acting on behalf of the United States Government assumes any liability resulting from the use of the information contained in this document, or warrants that the use of any information, apparatus, method, or process disclosed in this document may not infringe privately owned rights.

sample readings on a known metal, such as SAE 1040 steel, and adjusting the temperature of the probe until a standard emf is obtained. The hot probe and cold contact are then placed on the metal sample to be tested. The hot probe sample junction and the cold contact sample junction each display the "Seebeck" effect. The total emf produces an unbalance in the circuit which is indicated on the null detector. This unbalance is eliminated by adjusting the variable emf voltage source until a null is reestablished. The difference between the initial null emf and the sample null emf is read directly from the voltage source potentiometer. Emf values are read to 1/100 of a millivolt in the range of 0.01 to 10.0 millivolts, with an accuracy of ±1/100 of a millivolt.

Notes:

1. Most commercial ferrous and nonferrous alloys do not have overlapping emf ranges and are easily determined. However, if an alloy to be tested has an overlapping emf range with any other alloy or unalloyed metal being considered, it may be necessary to supplement this device with some other means of determining whether the alloy has a given composition.
2. Inquiries concerning this innovation may be directed to:

   Office of Industrial Cooperation
   Argonne National Laboratory
   9700 South Cass Avenue
   Argonne, Illinois 60439
   Reference: B67-10035

Source: C. C. Stone and D. E. Walker
Metallurgy Division
(ARG-235)

Patent status:

Inquiries about obtaining rights for commercial use of this innovation may be made to:

Mr. George H. Lee, Chief
Chicago Patent Group
U.S. Atomic Energy Commission
Chicago Operations Office
9800 South Cass Avenue
Argonne, Illinois 60439

NASA TECH BRIEF

NASA Tech Briefs are issued to summarize specific innovations derived from the U.S. space program, to encourage their commercial application. Copies are available to the public at 15 cents each from the Clearinghouse for Federal Scientific and Technical Information, Springfield, Virginia 22151.

Residual Magnetism Holds Solenoid Armature in Desired Position

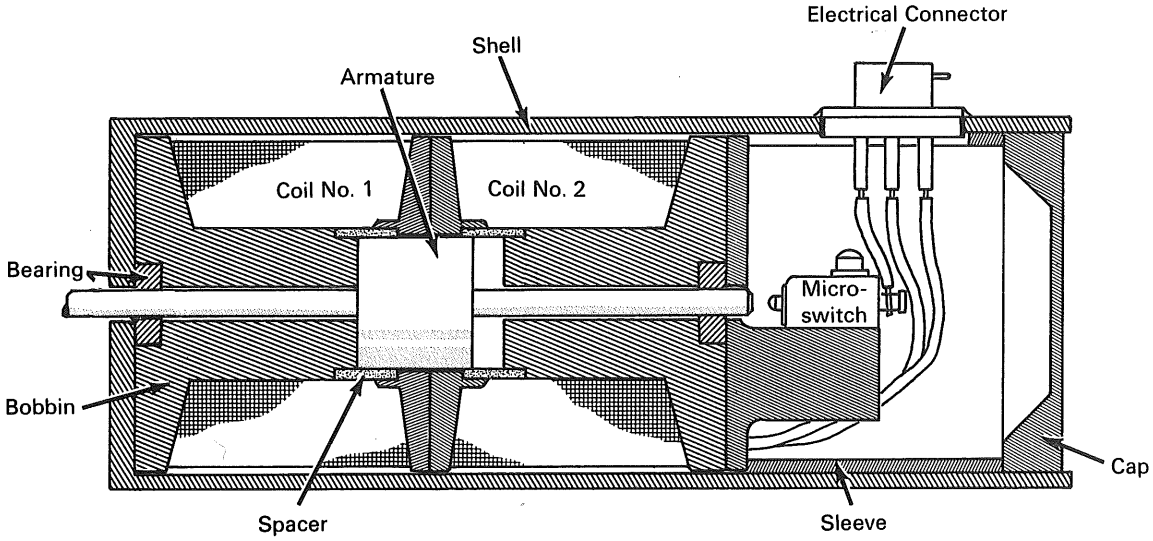

The problem:

To design a holding solenoid that will hold its armature in a desired position without the continuous application of electrical power or mechanical locking devices.

The solution:

A solenoid that utilizes residual magnetism to hold the armature in the desired position after excitation current is removed from the coil.

How it's done:

The solenoid consists of two coils with insulated copper windings; a bobbin, an armature, and a shell made of a material having the desired residual properties (for example, alloy ASTM A-353); brass bobbin spacers; polytetrafluoroethylene bearings; and a sleeve, cap, and switch bracket made of aluminum or stainless steel. A microswitch may be included to monitor the position of the armature.

When excitation current is applied to coil No. 1 of the solenoid, the armature moves to the position indicated in the illustration. When the current is turned off from this coil, the residual magnetic field in the magnetic circuit (linking the bobbin, armature, and shell) will hold the armature in position as long as desired. The armature can be released from this holding position by applying current to coil No. 2 or exerting a mechanical force on the armature shaft that is greater than the residual magnetic force. When the armature is moved from its equilibrium (holding) position, the residual magnetic field essentially disappears. The armature can then be moved in either direction by applying current to the appropriate coil.

(continued overleaf)

This document was prepared under the sponsorship of the National Aeronautics and Space Administration. Neither the United States Government nor any person acting on behalf of the United States Government assumes any liability resulting from the use of the information contained in this document, or warrants that such use will be free from privately owned rights.

Notes:

1. Although this solenoid consumes no electrical power in the hold position and eliminates the need for mechanical locking devices, it has a low tolerance to armature displacements from the equilibrium position. Such displacements destroy the residual magnetic field. The solenoid should therefore not be used in a vibration environment, without suitable modification.
2. Inquiries concerning this innovation may be directed to:

   Technology Utilization Officer
   Lewis Research Center
   21000 Brookpark Road
   Cleveland, Ohio 44135
   Reference: B67-10038

Patent status:

No patent action is contemplated by NASA.

Source: R. P. Crawford
of General Dynamics
under contract to
Lewis Research Center
(Lewis-343)

NASA TECH BRIEF

NASA Tech Briefs are issued to summarize specific innovations derived from the U.S. space program, to encourage their commercial application. Copies are available to the public at 15 cents each from the Clearinghouse for Federal Scientific and Technical Information, Springfield, Virginia 22151.

Study Made of Explosive Cutting in Simulated Space Environments

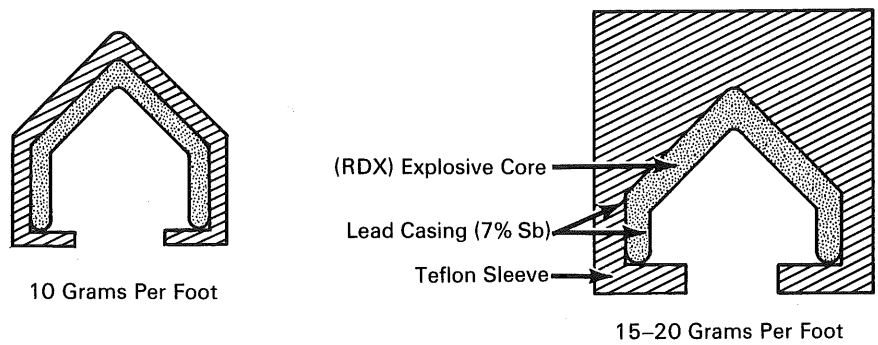

CONFIGURATIONS OF FLEXIBLE LINEAR SHAPED CHARGE (FLSC)

A study was made to determine the feasibility of explosive cutting and to establish techniques applicable to in-space cutting operations. The tests performed were divided into two phases: (1) feasibility tests using various explosives to determine the explosive cutting techniques for cutting a manhole in an empty fuel tank and, (2) technique refinement tests to improve the cutting by using shaped charge cutting techniques.

Complete details of the study are contained in NASA Technical Memorandum, "Explosive Cutting of a Manhole in Simulated Saturn V Upper Stage Fuel Tanks in Space Environments," NASA TM X-53440, by L. O. Hamilton, April 20, 1966.

The results of the study are summarized as follows:

A Flexible Linear Shaped Charge (FLSC) containing 15 grains of RDX per foot and backed by a holding fixture (backup plate) was successfully used to cut 1/8-inch thick 2014-T aluminum. Although data were insufficient to assign a reliability figure, vendor data indicated that a lead encased FLSC containing 15 grains of RDX per foot will cut 1/8-inch thick 6061-T6 aluminum at a reliability of 0.99999 at 90 percent confidence level, at optimum standoff distance.

Testing was conducted at atmospheric pressures and in a vacuum of 26 inches of mercury. There was no degradation of the explosive noted under vacuum conditions.

Microhardness testing of a target, after the cutting operation, indicated that work hardening of the target material is limited to the immediate vicinity of the cut edge.

Note:

Copies of the technical memorandum are available from:

Technology Utilization Officer
Marshall Space Flight Center
Huntsville, Alabama 35812
Reference: B67-10040

(continued overleaf)

This document was prepared under the sponsorship of the National Aeronautics and Space Administration. Neither the United States Government nor any person acting on behalf of the United States Government assumes any liability resulting from the use of the information contained in this document, or warrants that such use will be free from privately owned rights.

Patent status:

Inquiries about obtaining rights for the commercial use of this invention may be made to NASA, Code GP, Washington, D.C. 20546.

Source: L. O. Hamilton and E. R. Coleman
of Hayes International Corporation
under contract to
Marshall Space Flight Center
(M-FS-1597)

NASA TECH BRIEF

NASA Tech Briefs are issued to summarize specific innovations derived from the U.S. space program, to encourage their commercial application. Copies are available to the public at 15 cents each from the Clearinghouse for Federal Scientific and Technical Information, Springfield, Virginia 22151.

Improved Fluid Control Circuit Operates on Low Power Input

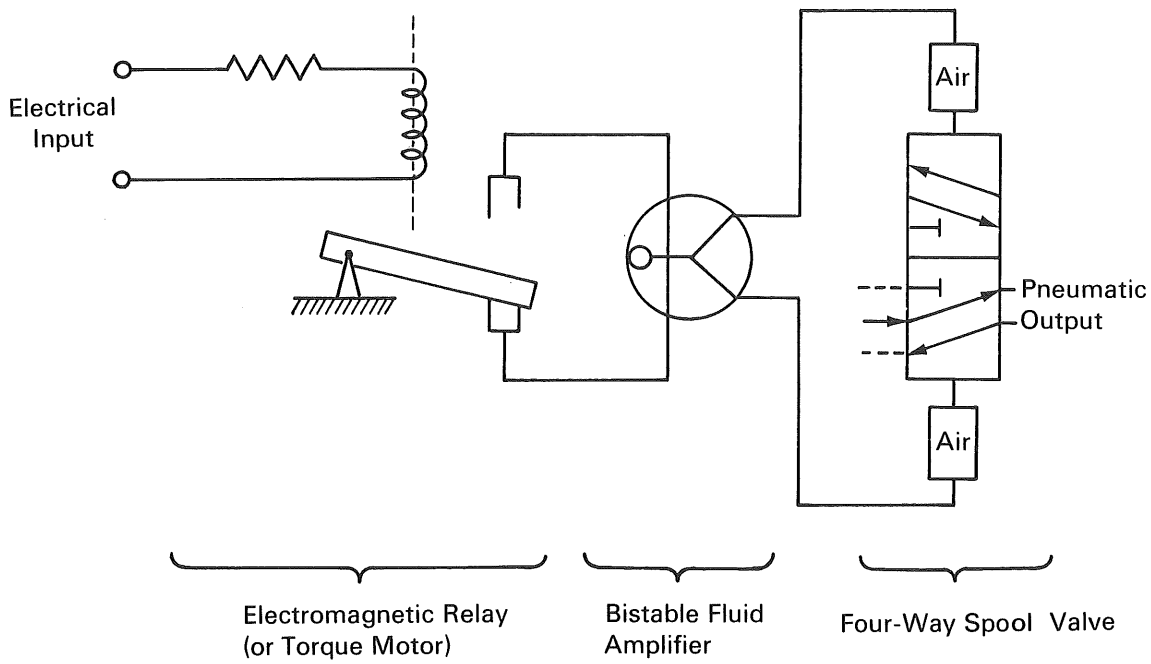

The problem:

To actuate fluid control circuits with low level electrical signals. Commercial solenoid driven valves have been used for this application but require relatively high power levels.

The solution:

A standard, commercially available electromagnetic relay switches a fluid amplifier that, in turn, drives a spool valve.

How it's done:

The relay contacts are replaced by nozzles connected to the control ports of a bistable fluid jet amplifier. In operation, the spring loaded armature of the relay caps one nozzle or the other as the relay is activated and deactivated. The fluid jet amplifier controls the spool of a mechanical valve handling relatively high volumes and flow rates.

Notes:

1. Use of the electromagnetic relay results in a power requirement of only 10 milliwatts compared to 10 watts required by a solenoid in the same application.
2. By cascading fluid amplifiers and replacing the relay with a torque motor (permanent magnet polarized relay) required power could be reduced to less than 0.1 milliwatt.

(continued overleaf)

This document was prepared under the sponsorship of the National Aeronautics and Space Administration. Neither the United States Government nor any person acting on behalf of the United States Government assumes any liability resulting from the use of the information contained in this document, or warrants that such use will be free from privately owned rights.

3. Frequency response greater than 20 cps may be obtained using the torque motor arrangement; solenoid valves are generally limited to rates below 5 cps.
4. The low input power required permits direct connection with digital computer outputs without amplification.
5. Inquiries concerning this innovation may be directed to:

   Technology Utilization Officer
   Lewis Research Center
   21000 Brookpark Road
   Cleveland, Ohio 44135
   Reference: B67-10042

Patent status:

No patent action is contemplated by NASA.

Source: Vern Gebben
(Lewis-325)

NASA TECH BRIEF

NASA Tech Briefs are issued to summarize specific innovations derived from the U.S. space program, to encourage their commercial application. Copies are available to the public at 15 cents each from the Clearinghouse for Federal Scientific and Technical Information, Springfield, Virginia 22151.

Absolute Viscosity Measured Using Instrumented Parallel Plate System

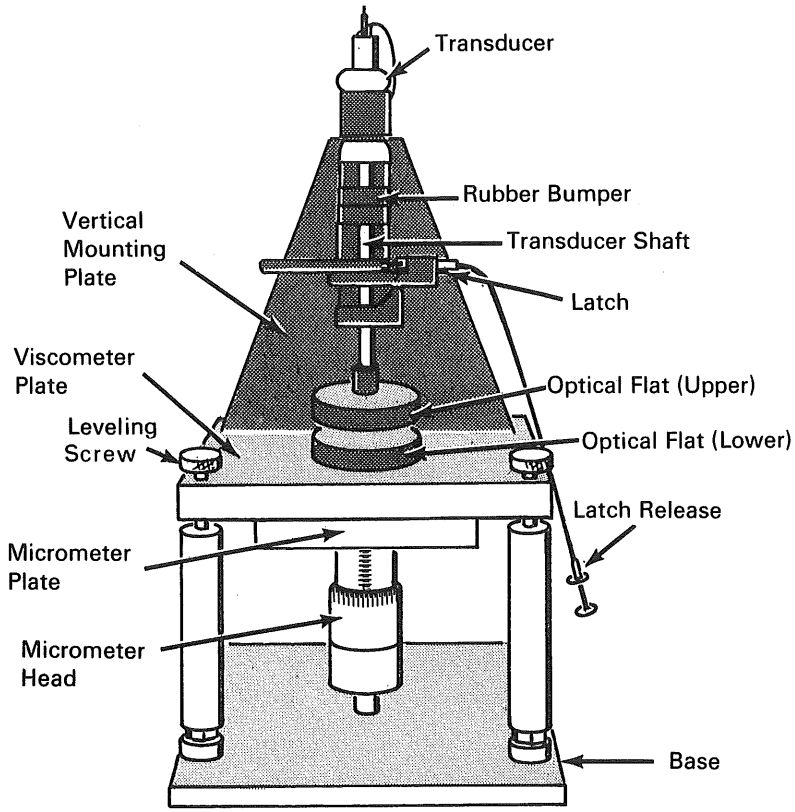

The problem:

To measure absolute viscosity of liquids or slurries and automatically display the results on a graphic record. Prior methods have involved time consuming apparatus setup and have required extensive calculations from initial measurements.

The solution:

An automatic system that measures the true average shear viscosity of liquids and viscoelastic materials, based on the parallel plate method. The system consists of a viscometer sensor, a computer, a time base, and a strip chart recorder.

How it's done:

The viscometer consists of a base, vertical and horizontal mounting plates, and the necessary related hardware to mount two optical flats, mated to two color fringes, that are used in lieu of parallel plates. The mounting devices incorporate leveling and deflection screws that afford parallelism between the two

(continued overleaf)

This document was prepared under the sponsorship of the National Aeronautics and Space Administration. Neither the United States Government nor any person acting on behalf of the United States Government assumes any liability resulting from the use of the information contained in this document, or warrants that such use will be free from privately owned rights.

optical flats through 360° rotation. The lower optical flat is mounted above the micrometer head, resting normally on a machined recess in the lower frame and the upper flat is fixed to the end of a shaft that extends upward through two linear bearings to a linear displacement transducer. The shaft is equipped with a simple friction latch that permits it to be retained in any desired position. A collar and rubber bumper prevent the optical flats from damage by severe contact.

With the upper and lower flats mated (two-color fringes), the micrometer head is turned until movement of the strip chart recorder pen is noted, and the micrometer is backed off until the pen no longer moves(zero calibration point). The range (thousandths of an inch the specimen under test is expected to vary in thickness) is set for full scale deflection of the recorder pen. The zero calibration is rechecked and the system is now set to measure and record any movement of the upper optical flat.

A discrete volume of the material whose viscosity is to be measured is placed on the lower flat and the upper flat is manually moved down until it contacts the material, at which point the friction latch is fastened. The volume and fixed force (weight of the upper flat and shaft assembly) are entered into the computer as is the initial height of the upper flat just in contact with the material. The instantaneous measurement of the materials' viscosity is computed upon releasing the friction latch which starts the recorder time base. Points are plotted automatically for tests of preselected duration and an extrapolation to one second is made.

Notes:

1. This system could be applied to general measurement of viscosity of liquids and viscoelastic materials. The paint and petroleum industries are examples. Pathology laboratories might also find it useful.
2. Inquiries concerning this invention may be directed to:

   Technology Utilization Officer
   Jet Propulsion Laboratory
   4800 Oak Grove Drive
   Pasadena, California 91103
   Reference: B67-10041

Patent status:

Inquiries about obtaining rights for the commercial use of this invention may be made to NASA, Code GP, Washington, D.C. 20546.

Source: Harold H. Broyles et al
(JPL-874)

AEC-NASA TECH BRIEF

AEC-NASA Tech Briefs describe innovations resulting from the research and development program of the U.S. AEC or from AEC-NASA interagency efforts. They are issued to encourage commercial application. Tech Briefs are published by NASA and may be purchased, at 15 cents each, from the Clearinghouse for Federal Scientific and Technical Information, Springfield, Virginia 22151.

Multipurpose Instrumentation Cable Provides Integral Thermocouple Circuit

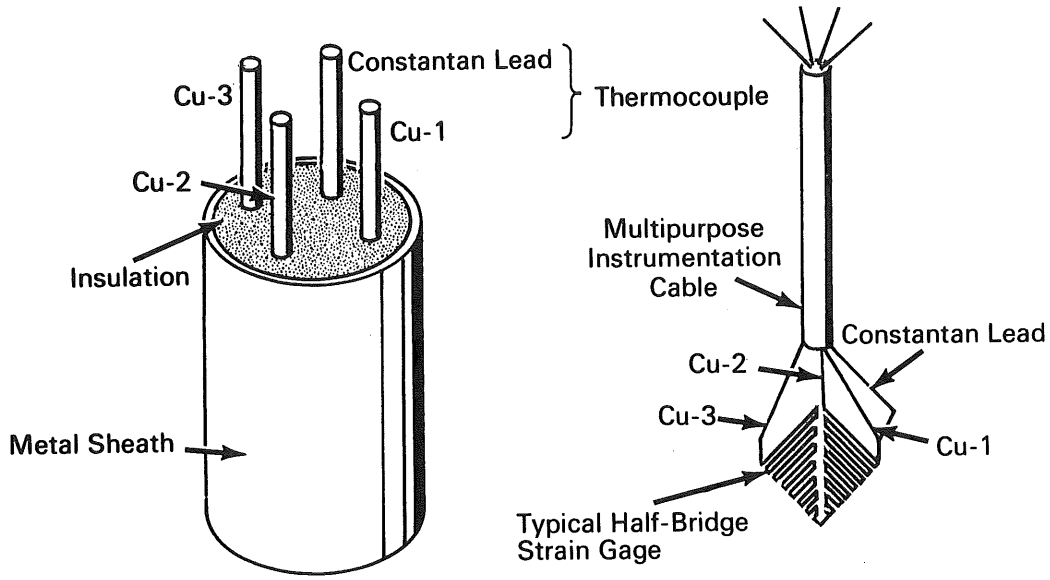

The problem:

Using transducers to measure strain, vibration, pressure, etc., throughout a wide temperature range requires close monitoring of transducer operating temperatures. Standard methods use two transducer lead wires and a separate thermocouple for each transducer, resulting in bulky and complex circuitry.

The solution:

A multipurpose cable with an integral thermocouple circuit that shares one of the transducer conductors.

How it's done:

In a typical strain gage configuration, the sheathed cable contains three copper conductors Cu-1, Cu-2, and Cu-3 for gage excitation and output plus a constantan conductor. The constantan conductor forms the negative leg of a copper/constantan thermocouple and uses one of the copper leads as the other leg. This permits measurement of the strain gage (transducer) temperature without increasing the overall size of the device by inclusion of a separate two-wire thermocouple.

Note:

Inquiries concerning this innovation may be directed to:

Technology Utilization Officer
AEC–NASA Space Nuclear Propulsion Office
U.S. Atomic Energy Commission
Washington, D.C. 20545
Reference: B67-10046

(continued overleaf)

This document was prepared under the sponsorship of the Atomic Energy Commission and/or the National Aeronautics and Space Administration. Neither the United States Government nor any person acting on behalf of the United States Government assumes any liability resulting from the use of the information contained in this document, or warrants that the use of any information, apparatus, method, or process disclosed in this document may not infringe privately owned rights.

Patent status:

No patent action is contemplated by AEC or NASA.

Source: G. Zellner
of Westinghouse Astronuclear Laboratory
under contract to
Space Nuclear Propulsion Office
(NU-0108)

AEC-NASA TECH BRIEF

AEC-NASA Tech Briefs describe innovations resulting from the research and development program of the U.S. AEC or from AEC-NASA interagency efforts. They are issued to encourage commercial application. Tech Briefs are published by NASA and may be purchased, at 15 cents each, from the Clearinghouse for Federal Scientific and Technical Information, Springfield, Virginia 22151.

Solid-State Time-to-Pulse-Height Converter Developed

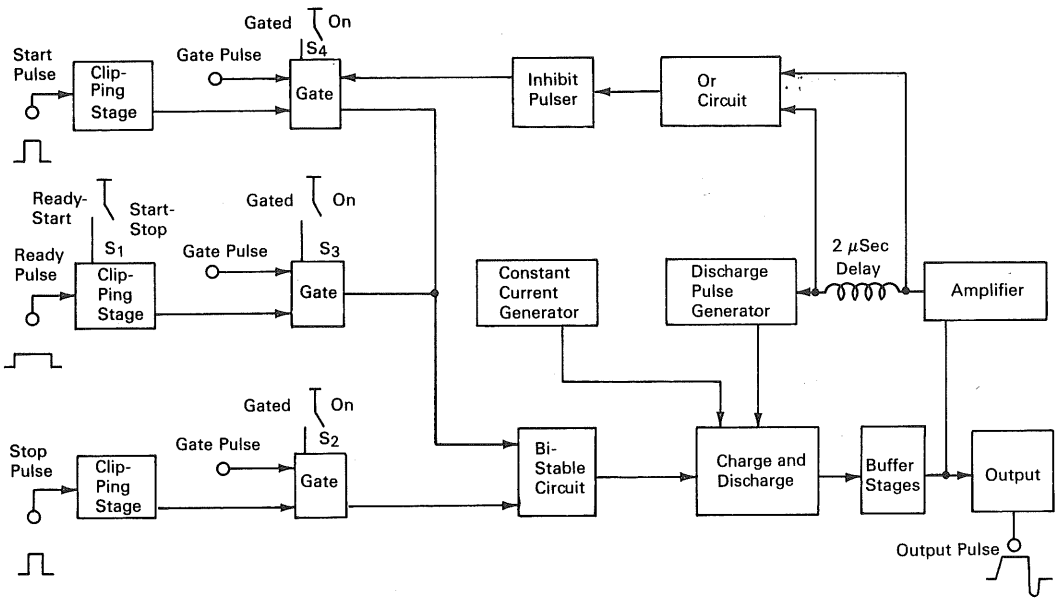

The problem:

To design a circuit capable of producing an output pulse with an amplitude directly proportional to the time interval between two input pulses. A single circuit must be capable of operating under two separate and distinctly different input conditions. These conditions are:

1. Where it is desired to measure the time interval between two pulses which occur in very rapid succession. This time interval is generally of shorter duration than that of the pulse lengths themselves.
2. Where it is desired to measure the time interval between the starting point and the end point of a continuous "beam" type pulse. The circuit in this instance receives not two pulses, but one in the form of burst energy.

Commonly employed methods of obtaining time-to-pulse-height conversion require that separate circuits be used for each type of input condition.

The solution:

A solid-state circuit which incorporates selected circuit options to achieve variable mode operation. A tunnel diode, used as a bistable element, controls the charging time of a capacitor in proportion to the time interval being measured. Time-to-pulse-height conversion is obtained for either randomly or periodically occurring pulses.

How it's done:

The device achieves time-to-pulse-height conversion by controlling the "on" time of a bistable circuit which charges a capacitor. The voltage developed across the capacitor is thus proportional to the time

(continued overleaf)

This document was prepared under the sponsorship of the Atomic Energy Commission and/or the National Aeronautics and Space Administration. Neither the United States Government nor any person acting on behalf of the United States Government assumes any liability resulting from the use of the information contained in this document, or warrants that the use of any information, apparatus, method, or process disclosed in this document may not infringe privately owned rights.

interval. After a short time interval the capacitor is discharged so that the circuit is ready for a new conversion. The conversion is accomplished by five basic circuit functions: (1) wave shaping circuits and gates, (2) converter circuits, (3) capacitor discharge circuit, (4) start pulse inhibit circuit, and (5) isolating and output stages. The circuit permits two modes of operation: ready-start and start-stop.

The ready-start mode is used to measure the time interval between two pulses occurring at a random rate. By positioning S_1 in the ready-start position, the circuit turns on the bistable element whenever a start pulse appears in coincidence with a ready pulse. The ready pulse, whose duration is fixed by a delay cable, switches the bistable element off.

With S_1 in the start-stop position, a "ready current" is always present at the bistable circuit, and the bistable circuit is turned on by a start pulse. The circuit remains on until either stop pulse or a "negative" ready pulse is applied. This mode of operation is used for experiments where one pulse occurs at a periodic rate, i.e., pulsed beam experiments.

The wave shaping circuits and gates first shape the input pulses (start, ready, and stop) in size and duration. The start and stop pulses, which must be positive, are clipped to a duration of 7 microseconds. The ready pulse is clipped to a time longer than the true interval of interest. The start pulse is delayed so that for isochronous pulses the start pulse arrives later than the start of the ready pulse.

The capacitor discharge is controlled by the pulse generator and the charge and discharge circuitry. A normally cut off transistor amplifier is brought into conduction and discharges the capacitor after a 2 microsecond delay. The discharge current of the capacitor produces an output pulse of an amplitude directly proportional to the time interval between input pulses.

The "or" and inhibit pulser circuits close the gate to the start pulse regardless of the position of S_4. This is to ensure that a new start pulse will not enter when a cycle is in progress. A 2 microsecond delay line is included between the discharge pulse generator and the "or" circuit to provide a flat-topped pulse suitable for use with a multichannel pulse height analyzer.

The isolation and output section uses three cascaded emitter followers to present a very high impedance to the charging capacitor, thus minimizing capacitor leakage current and maintaining system accuracy.

Notes:

1. Input pulses to the converter must have a rise time of less than 10 nanoseconds and an amplitude of at least 1.5 volts.
2. Ready pulses appearing at the input of the device must have a time duration greater than the time lag between the pulses under observation. This is to ensure that clipping of the ready pulse at the ready clipping line will not impair the complete coincidence condition which must occur between ready and start pulses.
3. If desired, all pulse inputs may be gated, thus reducing the duty cycle of the device. A positive pulse with an amplitude of 1.5 volts is required to open the gate.
4. Additional details contained in: *IEEE Transactions on Nuclear Science,* June 1964, pp. 399–405.
5. Inquiries concerning this innovation may be directed to:

   Office of Industrial Cooperation
   Argonne National Laboratory
   9700 South Cass Avenue
   Argonne, Illinois 60439
   Reference: B67-10053

Source: R. G. Roddick, Electronics Division, and R. J. Lynch, Physics Division (ARG-170)

Patent status:

Inquiries about obtaining rights for commercial use of this innovation may be made to:

Mr. George H. Lee, Chief
Chicago Patent Group
U.S. Atomic Energy Commission
Chicago Operations Office
9800 South Cass Avenue
Argonne, Illinois 60439

NASA TECH BRIEF

NASA Tech Briefs are issued to summarize specific innovations derived from the U.S. space program, to encourage their commercial application. Copies are available to the public at 15 cents each from the Clearinghouse for Federal Scientific and Technical Information, Springfield, Virginia 22151.

Circuit Multiplies Pulse Width Modulation, Exhibits Linear Transfer Function

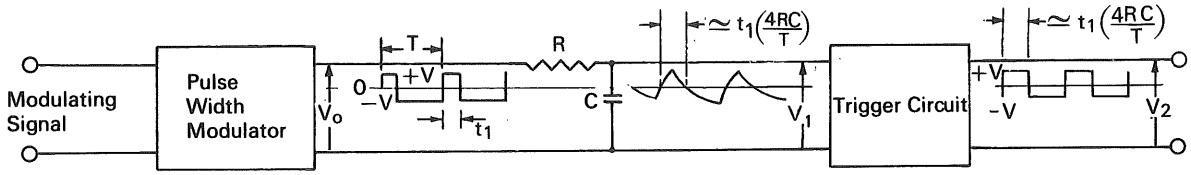

The problem:

To provide a simple means of multiplying the width modulation of a pulse train by some constant factor.

The solution:

A modulation multiplier that operates directly on a pulse width modulated input signal to generate an output pulse train having a greater degree of width modulation than the input signal.

How it's done:

Pulses from the pulse width modulator are applied to the input of the modulation multiplier. The modulation multiplier consists of an RC low-pass filter followed by a level-sensing trigger circuit. This circuit responds to its exponential sawtooth input voltage V_1 by switching to output level $+V$ when V_1 is positive and to $-V$ when V_1 is negative. In this way the circuit generates the pulse width modulated output V_2. When the RC time constant is equal to or greater than the period T of the pulses V_o (the input to the modulation multiplier), the multiplication is linear (within 2 percent for RC equal to the input pulse period and better as the RC time constant increases) over the whole range of operation. The output modulation is greater than the input modulation by approximately 4RC/T.

Notes:

1. The modulation multiplication method also applies to input pulse switching between $+V_o$ and 0 volts. However, the level at which the trigger circuit changes state must be adjusted to compensate for the additional dc level of the input pulse.
2. Inquiries concerning this invention may be directed to:

   Technology Utilization Officer
   Headquarters
   National Aeronautics and Space Administration
   Washington, D.C. 20546
   Reference: B67-10055

Patent status:

Inquiries about obtaining rights for the commercial use of this invention may be made to NASA, Code GP, Washington, D.C. 20546.

Source: A. W. Carlson and A. Furciniti
of Northeastern University
under contract to
Headquarters, NASA

(HQ-56)

Category 01

This document was prepared under the sponsorship of the National Aeronautics and Space Administration. Neither the United States Government nor any person acting on behalf of the United States Government assumes any liability resulting from the use of the information contained in this document, or warrants that such use will be free from privately owned rights.

NASA TECH BRIEF

NASA Tech Briefs are issued to summarize specific innovations derived from the U.S. space program, to encourage their commercial application. Copies are available to the public at 15 cents each from the Clearinghouse for Federal Scientific and Technical Information, Springfield, Virginia 22151.

Electron Multiplier Has Improved Performance and Stability

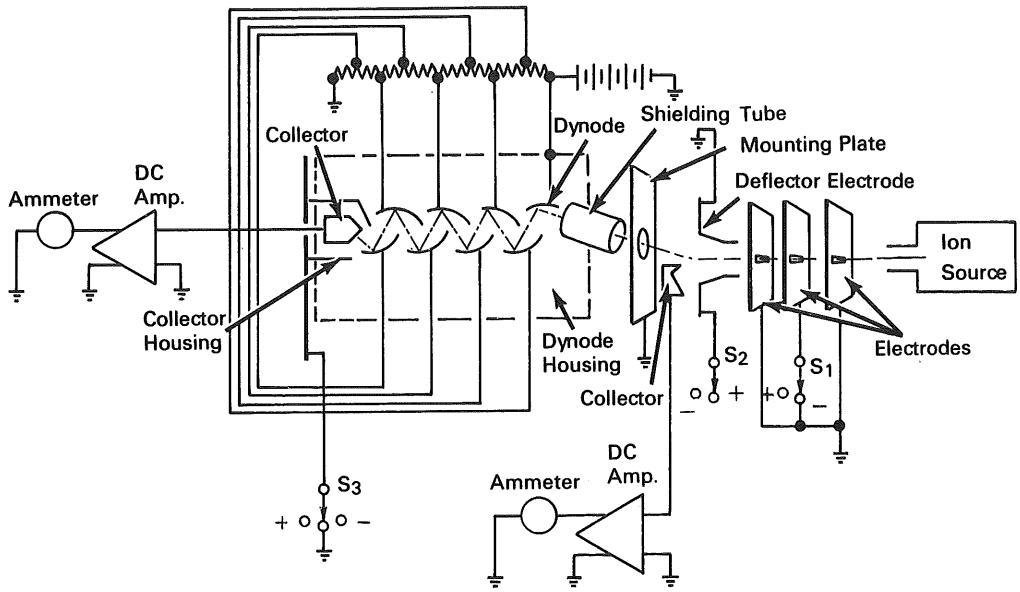

The problem:

To design an electron multiplier that is rugged in construction and capable of improved performance. The electron multiplier is used for the accurate detection and measurement of charged particles (ions) in evacuated systems such as high resolution mass spectrometers, leak detectors, and vacuum ultraviolet spectrographs. Prior constructions were easily damaged by mechanical shock and vibration.

The solution:

A design in which a series of massive metal dynodes are compactly secured with ceramic rods for operation in a metal housing. The housing is rigidly mounted within a soft steel vacuum enclosure which shields the multiplier from the effects of electromagnetic fields external to the housing.

How it's done:

At the entrance of the vacuum enclosure, a shielding tube is maintained at the potential of the housing. Plates are mounted within the vacuum enclosure adjacent to the shielding tube to form an ion lens for focusing a beam of ions on the first dynode. Deflector electrodes are provided for directing the beam of ions either on the first dynode or onto a collector to be used to measure the gain of the electron multiplier. The dynode housing is kept at the high negative potential of the first dynode, which results in a strong focusing effect for secondary electrons. Losses of electrons

(continued overleaf)

This document was prepared under the sponsorship of the National Aeronautics and Space Administration. Neither the United States Government nor any person acting on behalf of the United States Government assumes any liability resulting from the use of the information contained in this document, or warrants that such use will be free from privately owned rights.

in the direction of the dynodes axes are thus avoided and higher gains may be achieved. A grid between the last dynode and the electron collector reduces substantially any pick up of high voltage hum and noise by the collector. If this grid is positively charged, it can be used to reverse the polarity of the output current, thus providing a positive output which is required for most logarithmic amplifiers.

Notes:

Inquiries concerning this invention may be directed to:

Technology Utilization Officer
Goddard Space Flight Center
Greenbelt, Maryland 20771
Reference: B67-10060

Patent status:

Title to this invention has been waived under the provisions of the National Aeronautics and Space Act (42 U.S.C. 2457 (f)), to the GCA Corporation, Bedford, Massachusetts, 01730.

Source: G.C.A. Corporation
under contract to
Goddard Space Flight Center
(GSFC-546)

NASA TECH BRIEF

NASA Tech Briefs are issued to summarize specific innovations derived from the U.S. space program, to encourage their commercial application. Copies are available to the public at 15 cents each from the Clearinghouse for Federal Scientific and Technical Information, Springfield, Virginia 22151.

Control Circuit Ensures Solar Cell Operation at Maximum Power

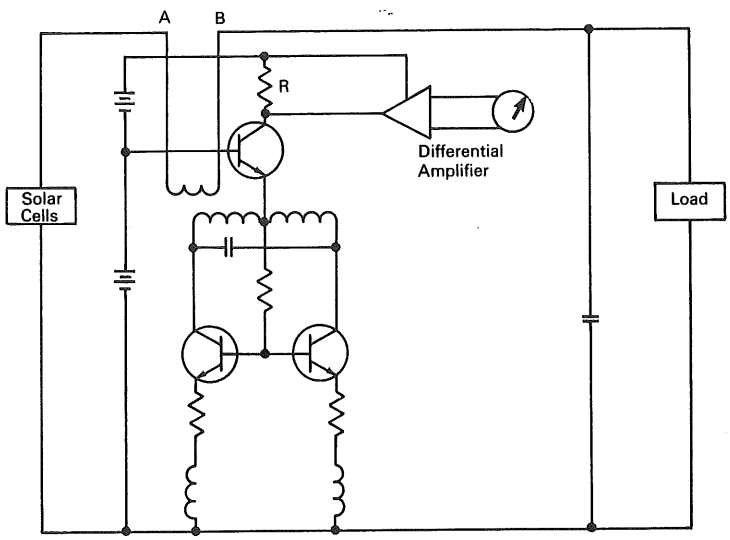

The problem:

To design a circuit that will enable a solar cell power supply to deliver maximum electrical power to a load. The absolute values of electrical power generated by solar cells vary quite drastically with the differing environmental conditions (temperature, energetic-particle radiation, and illumination) in which the cells operate. Operation of the cells at a preselected voltage (or current) will not transfer maximum power to the load under a wide range of environmental conditions.

The solution:

A circuit that senses the magnitude of the slope (dE/dI) of the E–I (voltage–current) characteristic curve and compares it to a reference voltage which represents the slope corresponding to the desired operating limits (95 percent of the maximum power point).

How it's done:

An ac voltage of constant magnitude is applied across points AB. The ac loading effect, inversely proportional to the slope dE/dI of the E–I characteristic curve, will reflect a current through the transformer which results in a voltage across R. This voltage (corresponding to dE/dI) is then compared to a reference voltage which represents the desired slope. The differential amplifier will balance at the desired slope, and the meter indication will be either positive or negative (above or below the desired slope). This voltage difference may be utilized to control the power applied to the load.

(continued overleaf)

This document was prepared under the sponsorship of the National Aeronautics and Space Administration. Neither the United States Government nor any person acting on behalf of the United States Government assumes any liability resulting from the use of the information contained in this document, or warrants that such use will be free from privately owned rights.

Note:

Inquiries concerning this innovation may be directed to:

Technology Utilization Officer
Goddard Space Flight Center
Greenbelt, Maryland 20771
Reference: B67-10061

Patent status:

No patent action is contemplated by NASA.

Source: John Paulkovich
(GSFC-432)

NASA TECH BRIEF

NASA Tech Briefs are issued to summarize specific innovations derived from the U.S. space program, to encourage their commercial application. Copies are available to the public at 15 cents each from the Clearinghouse for Federal Scientific and Technical Information, Springfield, Virginia 22151.

Portable Detector Set Discloses Helium Leak Rates

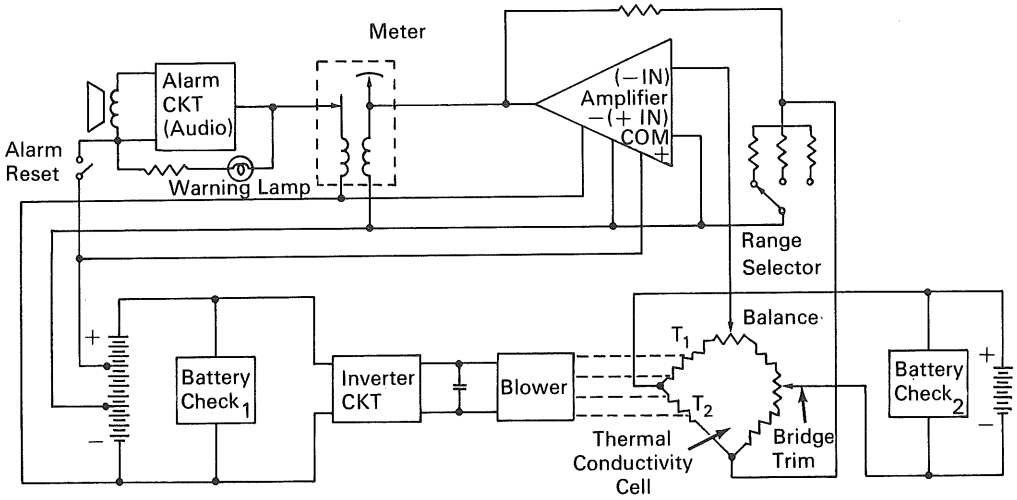

The problem:

In detecting leaks in closed fluid systems, soap solutions, mass spectrometers, or special devices sensitive to a specific gas, are not effective in all applications. The use of common tracer gases has posed problems involving safety or contamination or both.

The solution:

Use of the inert gas helium as a tracer is made possible by the development of a portable helium detector that will measure helium leak rates from 1×10^{-3} to 1×10^{-6} cc/sec.

How it's done:

Operation of the gas detector unit is based on a comparison of the thermal conductivity properties of various gases. A thermal conductivity cell consisting of two constantly driven thermistors in a balanced bridge circuit, provides the medium by which the presence of gases having thermal conductivities different from that of the ambient is detected. The thermistors are matched and identically driven so that, with both exposed to the ambient, the bridge output is null. When either of the thermistors, T_1 or T_2, is exposed to a gas whose thermal conductivity differs from that of the ambient, that thermistor's resistance value changes, unbalancing the bridge circuit to produce a voltage that drives the meter, which is calibrated to read directly the equivalent cc/sec leak rate of the helium gas in the ambient air. A blower system is used to pull the ambient through sampling tubes containing the thermistors at a constant rate. One of the sampling tubes connects with an external fitting that accommodates three different probes: a gross leak probe to detect a relatively large concentration of helium in the ambient; a rigid pinpoint probe to locate the helium leak source; and a flexible pinpoint probe to locate helium leak sources in less accessible locations.

(continued overleaf)

This document was prepared under the sponsorship of the National Aeronautics and Space Administration. Neither the United States Government nor any person acting on behalf of the United States Government assumes any liability resulting from the use of the information contained in this document, or warrants that such use will be free from privately owned rights.

Notes:

1. The unit is a hand-held detector with its own battery pack (supported by an operator-worn strap) weighing only 7.7 lbs.
2. Appropriate calibration of the meter would permit the use of this device for detection of gases having a relatively wide range of thermal conductivities.
3. Inquiries concerning this innovation may be directed to:

   Technology Utilization Officer
   Marshall Space Flight Center
   Huntsville, Alabama 35812
   Reference: B67-10065

Patent status:

No patent action is contemplated by NASA.

Source: G. E. Anderson
of North American Aviation, Inc.
under contract to
Marshall Space Flight Center
(M-FS-1733)

NASA TECH BRIEF

NASA Tech Briefs are issued to summarize specific innovations derived from the U.S. space program, to encourage their commercial application. Copies are available to the public at 15 cents each from the Clearinghouse for Federal Scientific and Technical Information, Springfield, Virginia 22151.

Flow-Test Device Fits Into Restricted Access Passages

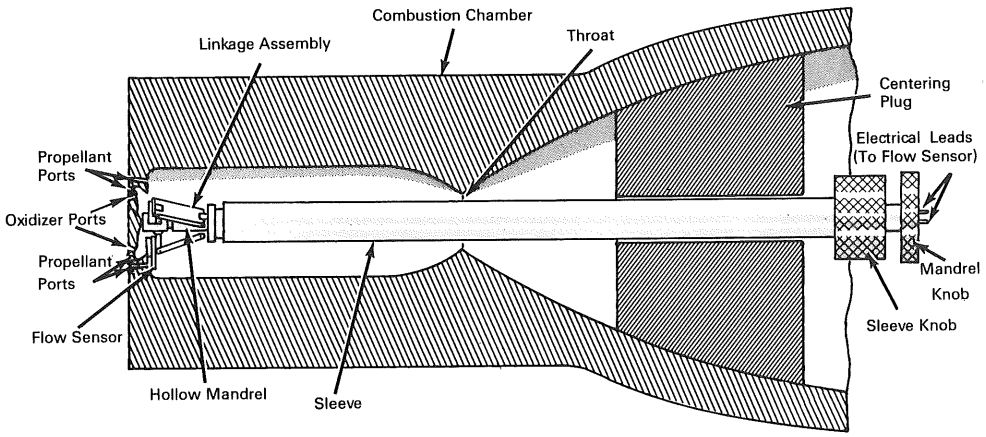

The problem:

To design a test device that will enable a fluid flow sensor to be properly positioned with respect to fluid (propellant and oxidizer) injector orifices, or ports, located at the end of a restricted passage in the combustion chamber of a rocket motor.

The solution:

A device incorporating a mandrel with a collapsible linkage assembly which can be inserted through a restricted passage (combustion chamber throat) and externally manipulated to position a fluid flow sensor (e.g., resistance thermometer) in proper relation to the flow port to be checked.

How it's done:

The collapsible linkage assembly, at the forward end of the hollow mandrel, carries three expandable support fingers which are uniformly spaced about the periphery of the mandrel. One of these fingers carries the flow sensor; the other fingers serve as support and positioning means. The mandrel, which is threaded to the inner circumference of the sleeve, can be rotated (by holding the sleeve knob with one hand and rotating the mandrel knob with the other hand) to expand the linkage after it has been inserted through the throat of the motor to position the sensor over one of the flow ports. Once the flow in a particular port has been checked, the entire device can be rotated to align the sensor with each of the other ports in sequence. To remove the device, the mandrel is rotated in the opposite direction with respect to the sleeve to collapse the linkage, and the device is easily withdrawn through the throat.

Note:

Inquiries concerning this invention may be directed to:

Technology Utilization Officer
Manned Spacecraft Center
Houston, Texas 77058
Reference: B67-10074

(continued overleaf)

This document was prepared under the sponsorship of the National Aeronautics and Space Administration. Neither the United States Government nor any person acting on behalf of the United States Government assumes any liability resulting from the use of the information contained in this document, or warrants that such use will be free from privately owned rights.

Patent status:

Inquiries about obtaining rights for the commercial use of this invention may be made to NASA, Code GP, Washington, D.C. 20546.

Source: B. J. Rosenbaum,
M. Oberschmidt,
and J. J. Fitzgerald
(MSC-1078)

NASA TECH BRIEF

NASA Tech Briefs are issued to summarize specific innovations derived from the U.S. space program, to encourage their commercial application. Copies are available to the public at 15 cents each from the Clearinghouse for Federal Scientific and Technical Information, Springfield, Virginia 22151.

Computer Program Simulates Design, Test, and Analysis Phases of Sensitivity Experiments

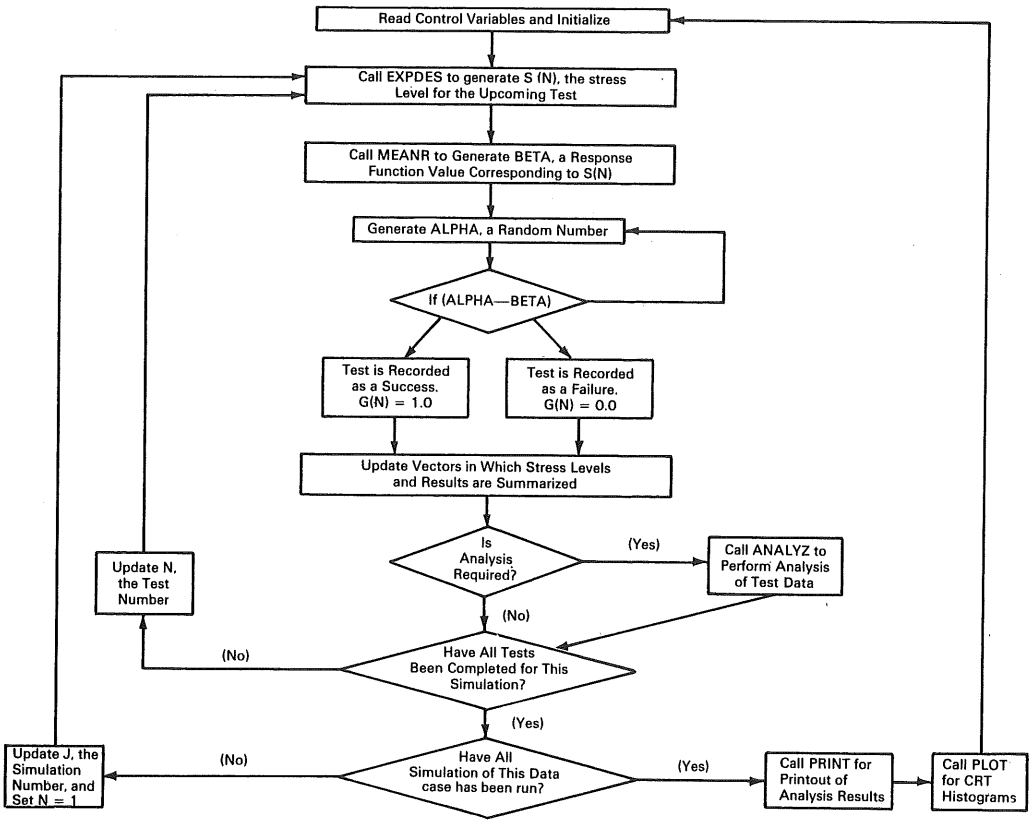

The problem:

To devise a general purpose computer program for the simulation of the design, test and analysis phases of sensitivity experiments. Such simulation is currently accomplished with special purpose computer programs. These programs generally do not provide a wide range of design-response function combinations and do not readily allow addition, deletion, or modification of subroutines to implement different types of designs.

The solution:

A modular program consisting of a relatively small main program and a number of specialized subroutines. Three of the subroutines are essentially buffer

(continued overleaf)

This document was prepared under the sponsorship of the National Aeronautics and Space Administration. Neither the United States Government nor any person acting on behalf of the United States Government assumes any liability resulting from the use of the information contained in this document, or warrants that such use will be free from privately owned rights.

routines used to call the specific routine required to implement the particular experimental design, response function, and analysis desired. Two utility subroutines handle the program output.

How it's done:

The desired experimental design, response function, and analysis procedures are specified by means of input control variables. The design routine is used to furnish a stress level for the first test and the corresponding response value is computed by the response function routine.

To introduce the randomness which characterized certain aspects of all tests, the response value is compared to a random number, uniformly distributed in [0, 1] and generated within the program. If the random number is greater than the response value, the test is recorded as a success. If, however, the random number is less than the response value, the test is a failure.

The stress value, the response, and whether the test was a success or a failure are stored in the core memory. Then the test number is updated and a new stress value is determined from the design function. The above cycle is then repeated and the information stored. This loop recurs until all the desired tests in the first simulation are performed. Then a second simulation is begun with the test number reset to one.

A maximum of 100 simulations, each consisting of up to 1024 tests, may be processed as a single data case. When these are completed, the results are all available in core storage. Then, for each simulation, estimates of the desired parameters are computed. Various characteristics of the response function can also be estimated, e.g., the stimulus levels corresponding to the 1% and 0.1% response levels or the mean and standard deviation of the distribution.

From these estimates the program then computes, over all simulations, the mean, median, standard error, maximum, and minimum values of each parameter estimate. These are then printed out in the analysis summary along with the true values of each parameter. When there are two parameters, their sample covariance matrix is also provided.

Notes:

1. This is a Fortran II program, coded for the IBM 7094.
2. This program has been used to simulate the Bartlett, run-down, 20 ZIL, block sequential, Alexander, and Rothman designs. Response functions which have been used in conjunction with these designs include the cumulative normal and cumulative uniform, those of Odell, and several special functions.
3. Maximum-likelihood estimation, predicted on the normal response function, and the method of reversals are the techniques of analysis which have received the most extensive use with this program.
4. Inquiries concerning this innovation may be directed to:

   COSMIC
   Computer Center
   University of Georgia
   Athens, Georgia 30601
   Reference: B67-10077

Patent status:

No patent action is contemplated by NASA.

Source: D. Rothman, M. J. Alexander, and J. M. Zimmerman of North American Aviation, Inc. under contract to Marshall Space Flight Center (M-FS-1496)

NASA TECH BRIEF

NASA Tech Briefs are issued to summarize specific innovations derived from the U.S. space program, to encourage their commercial application. Copies are available to the public at 15 cents each from the Clearinghouse for Federal Scientific and Technical Information, Springfield, Virginia 22151.

Instrument Continuously Measures Density of Flowing Fluids

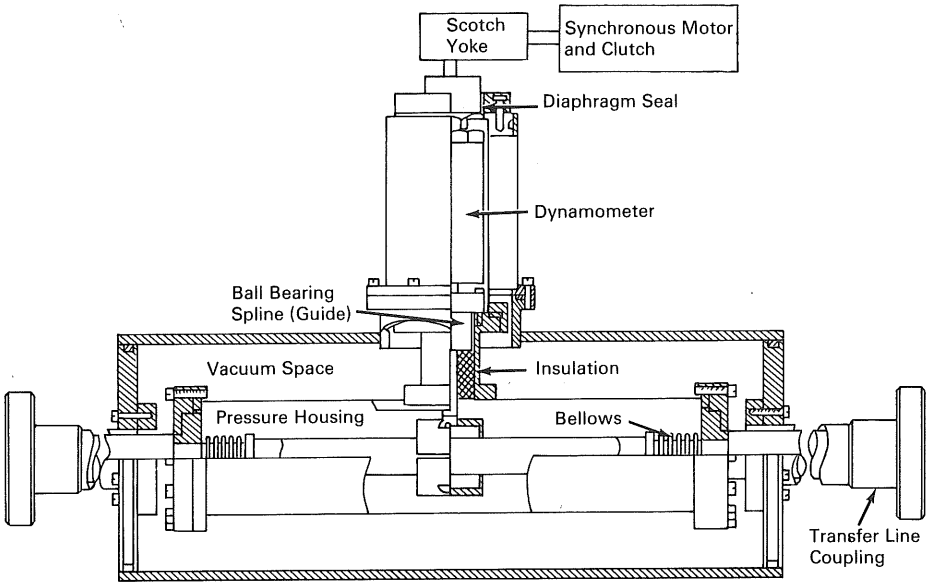

The problem:

To design an instrument that will continuously measure the densities of either single- or two-phase flowing cryogenic fluids. In addition the measurement must be made on actual flow, and not on a sample whose accuracy is doubtful. It is desirable to know the mass flow rates of cryogenic fuels and oxidizers to rocket engines during tests. The changes in density which can occur during transfer of the fluids make volume flow measurement unsatisfactory. Frequently mass flow rate is determined by obtaining a product of density and volume flow rates. The major difficulty with this method has been the lack of a satisfactory technique for measuring the density of a flowing fluid.

The solution:

An improved electromechanical densitometer based upon the principle that the mass of any vibrating system is a primary factor in determining the dynamic characteristics of the system. Thus if the fluid flowing through a system measurably affects the vibrating mass of the system, a means of measuring fluid density is provided.

How it's done:

The densitometer uses a movable section of the flow passage vibrated transversely at a constant amplitude and frequency as the sensing element. As the fluid passes through this tubular section, supported at each end by a bellows, a driving mechanism imparts an oscillating (sinusoidal) motion to both the

(continued overleaf)

This document was prepared under the sponsorship of the National Aeronautics and Space Administration. Neither the United States Government nor any person acting on behalf of the United States Government assumes any liability resulting from the use of the information contained in this document, or warrants that such use will be free from privately owned rights.

movable flow passage and the fluid passing through it. A dynamometer (force gage) linked between the tubular member and the driver continuously measures the acceleration reaction (product of mass and acceleration) of the fluid in the passage. Since the transverse motion of the movable section of the flow passage is dependent not only upon the force supplied from the mechanical oscillator but also upon the mass of the system (tube plus fluid), the mass of the system or tube motion basically becomes a function of the density of the fluid. Thus by measuring the force with the dynamometer the density of the fluid can be determined. Since the force generates an electrical signal (the output of the dynamometer) in phase with the motion and proportional to resultant maximum force, this signal after rectification by appropriate circuitry provides a resulting signal that is proportional to the maximum force. Consequently, the electrical signal is a measure of the fluid density in the passage.

Notes:

1. Additional advantages of this instrument are its simplicity, reliability, and good frequency response.
2. Mass flow rate is frequently determined by obtaining the product of density and volume flow rates. This densitometer provides a very satisfactory technique for measuring the fluid density necessary for this mass flow measurement.
3. Performance results have indicated that this densitometer is well suited for service in liquid oxygen and nitrogen single- and two-phase flow systems, and with only minor changes for use with liquid hydrogen.
4. Additional details are contained in: *The Review of Scientific Instruments,* vol. 34, no. 1, p 24–27, January 1963.
5. Inquiries concerning this invention may be directed to:

   Technology Utilization Officer
   Lewis Research Center
   21000 Brookpark Road
   Cleveland, Ohio 44135
   Reference: B67-10080

Patent status:

This invention has been patented by NASA (U.S. Patent No. 3,298,221), and royalty-free license rights will be granted for its commercial development. Inquiries about obtaining a license should be addressed to NASA, Code GP, Washington, D.C. 20546.

Source: C. E. Miller, R. B. Jacobs, and J. Macinko
of the National Bureau of Standards
under contract to
Lewis Research Center

(Lewis-309)

NASA TECH BRIEF

NASA Tech Briefs are issued to summarize specific innovations derived from the U.S. space program, to encourage their commercial application. Copies are available to the public at 15 cents each from the Clearinghouse for Federal Scientific and Technical Information, Springfield, Virginia 22151.

Circuit Increases Capability of Hysteresis Synchronous Motor

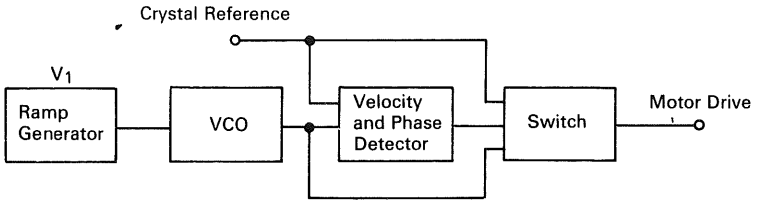

The problem:

To drive a load of given torque value by a high speed, high efficiency, low power drain, compact hysteresis synchronous motor. In a conventional system where it is desired to drive the load at a precise speed determined by a stable reference, this type motor could not torque the load into synchronism. Also, if the motor should momentarily drive the load into synchronism from stall, pullout torque would be too low to maintain synchronism. Proper pullout torque to maintain synchronism, in such a case, could only be obtained by starting the motor in a no-load condition.

The solution:

A frequency and phase detector circuit that determines the precise moment for switching the synchronous motor from the starting source to the reference source.

How it's done:

When the motor is to be started, the ramp generator delivers a voltage V_1 to the voltage-controlled oscillator (VCO) to run the oscillator at a low enough frequency to drive the high torque load. The ramp voltage slowly decreases, continuously increasing the VCO frequency as the motor follows in synchronism. While operating below the crystal reference frequency, the switch (composed of the velocity and phase detector) passes only the VCO frequency. When the VCO frequency and crystal reference frequency are equal and in phase, the velocity and phase detector passes only the crystal-controlled reference. All detection and switching is digitally controlled.

Notes:

1. This circuit could be used to obtain maximum starting and pullout torque for high speed headwheels and fast rewind devices in video recorder applications.
2. This technique permits driving larger torque loads with smaller motors having lower power drain.
3. Inquiries concerning this invention may be directed to:

   Technology Utilization Officer
   Manned Spacecraft Center
   Houston, Texas 77058
   Reference: B67-10084

Patent status:

Inquiries about obtaining rights for the commercial use of this invention may be made to NASA, Code GP, Washington, D.C. 20546.

Source: Ivan N. Markowitz
of Radio Corporation of America
under contract to
Manned Spacecraft Center
(MSC-1080)
Category 01

This document was prepared under the sponsorship of the National Aeronautics and Space Administration. Neither the United States Government nor any person acting on behalf of the United States Government assumes any liability resulting from the use of the information contained in this document, or warrants that such use will be free from privately owned rights.

NASA TECH BRIEF

NASA Tech Briefs are issued to summarize specific innovations derived from the U.S. space program, to encourage their commercial application. Copies are available to the public at 15 cents each from the Clearinghouse for Federal Scientific and Technical Information, Springfield, Virginia 22151.

Triple Modular Redundancy (TMR) Computer Operation Improved

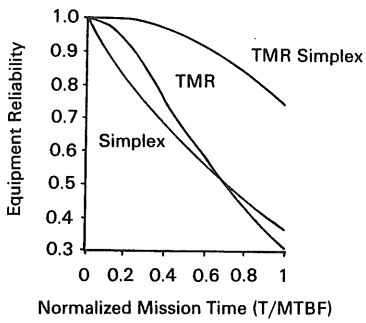

AVAILABILITY COMPARISONS

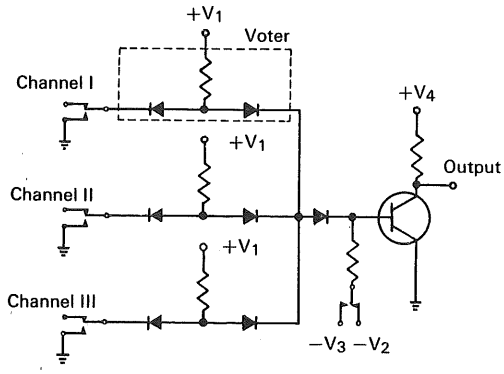

TMR TO SIMPLEX SWITCHING

The problem:

In conventional triple modular redundancy (TMR) machines, failed elements are masked by the voting function, but remain active. An additional failure in the same logical function will result in a system failure. The logic function containing the failed element is now less reliable than an equivalent simplex configuration. This condition exists because there are twice as many components as the simplex configuration and the failure of any one will cause the unit to fail. As failed elements accumulate in the machine, the TMR reliability curve is forced down and eventually crosses the equivalent simplex curve at somewhat less than the mean time before failure (MTBF) of the equivalent simplex configuration.

The solution:

By switching off the failed element plus one of the remaining good elements, the reliability curve will never cross the simplex curve and a substantial reliability increase will be obtained.

How it's done:

One method of switching from TMR to simplex is to control the bias of the voters. The voltage level is set for a threshold level of two units of current from the current summing network ($-V_2$). Upon sensing a failure, the bias is cut off from the failed channel voter and one of the remaining good channels. The remaining good channel is then set for a threshold level of one unit of current ($-V_3$).

Note:

Inquiries concerning this invention may be directed to:

Technology Utilization Officer
Manned Spacecraft Center
Houston, Texas 77058
Reference: B67-10085

(continued overleaf)

This document was prepared under the sponsorship of the National Aeronautics and Space Administration. Neither the United States Government nor any person acting on behalf of the United States Government assumes any liability resulting from the use of the information contained in this document, or warrants that such use will be free from privately owned rights.

Patent status:

Inquiries about obtaining rights for the commercial use of this invention may be made to NASA, Code GP, Washington, D.C. 20546.

Source: M. Ball and F. H. Hardie
of IBM Corporation
under contract to
Manned Spacecraft Center
(MSC-831)

NASA TECH BRIEF

NASA Tech Briefs are issued to summarize specific innovations derived from the U.S. space program, to encourage their commercial application. Copies are available to the public at 15 cents each from the Clearinghouse for Federal Scientific and Technical Information, Springfield, Virginia 22151.

Automatic Channel Switching Device

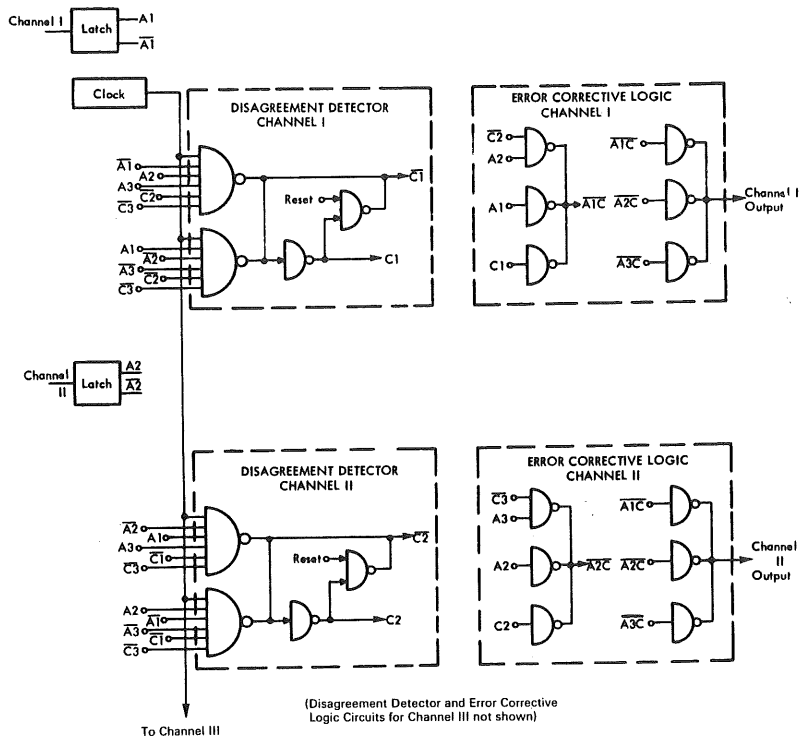

CHANNEL SWITCHING DEVICE

The problem:

In existing triple modular redundant (TMR) equipment, majority voters are used as failure correction devices. A majority voter compensates for an error in one and sometimes two of its input channels. (Two input failures can be corrected when they occur in opposite directions.) With a failure in one channel, both the remaining channels must agree or one of the channels must fail in an opposite direction of the first failure in order for the equipment to function properly. Both remaining channels affect the proper functioning of the system, therefore reliability in most cases is less than that of comparable simplex equipment.

The solution:

The channel switching device shown operates with all three TMR channels when there are no errors. The disagreement detector outputs $\overline{C1}$, $\overline{C2}$, and $\overline{C3}$ remain at the "1" level; C1, C2, and C3 remain at the "0" level. The channel outputs are the same as the inputs.

(continued overleaf)

This document was prepared under the sponsorship of the National Aeronautics and Space Administration. Neither the United States Government nor any person acting on behalf of the United States Government assumes any liability resulting from the use of the information contained in this document, or warrants that such use will be free from privately owned rights.

How it's done:

When the first failure occurs, the disagreement detector outputs for the incorrect channel change to the opposite level (C="1"; $\overline{C}$="0"). The error correcting logic uses only one of the remaining channel inputs to generate all three of the channel outputs. (A failure in channel 1 switches channel 3 input to the channel outputs, etc.) Since only one channel must operate correctly after the first failure, reliability of this section of the equipment will be better than that of conventional TMR equipment after the first failure.

Notes:

1. In conventional TMR machines, disagreement detectors (DD) sense errors by comparing the three voter (V) inputs or the three voter outputs. The detectors from each module are then "or"ed together for an error detection display. Failures are not isolated to a specific channel. Channel and module switching are required to isolate the failure.
2. Errors are isolated to a specific channel by comparing one voter input with the voter output for each channel as shown. This will test the voters as well as the channel and isolate the error to a specific channel.
3. Inquiries concerning this invention may be directed to:

   Technology Utilization Officer
   Manned Spacecraft Center
   Houston, Texas 77058
   Reference: B67-10086

Patent status:

Inquiries about obtaining rights for the commercial use of this invention may be made to NASA, Code GP, Washington, D.C. 20546.

Source: H. T. Olnowich and M. Ball
of IBM Corporation
under contract to
Manned Spacecraft Center
(MSC-832 and 834)

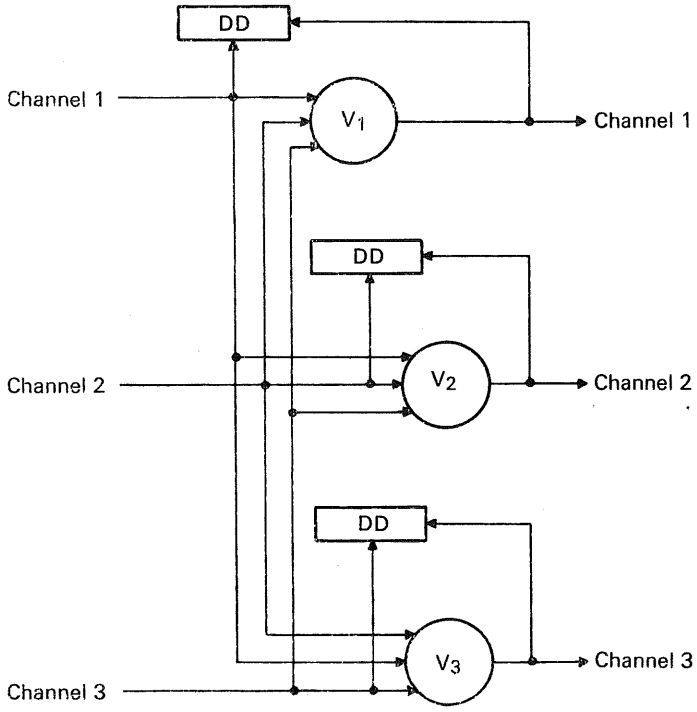

DISAGREEMENT DETECTOR ACROSS VOTER

NASA TECH BRIEF

NASA Tech Briefs are issued to summarize specific innovations derived from the U.S. space program, to encourage their commercial application. Copies are available to the public at 15 cents each from the Clearinghouse for Federal Scientific and Technical Information, Springfield, Virginia 22151.

Translator Program Converts Computer Printout into Braille Language

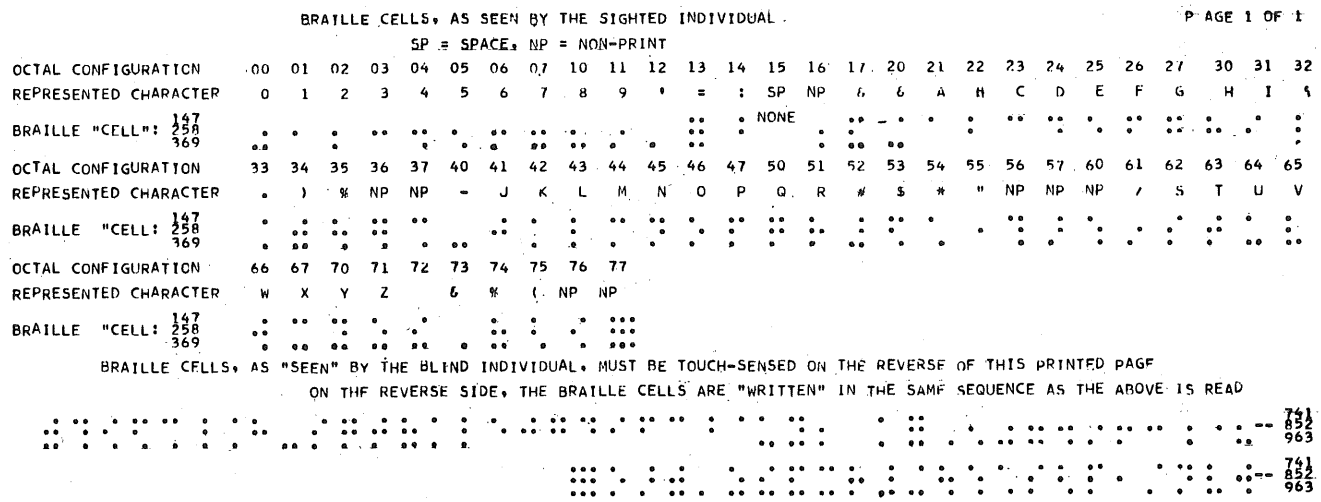

The problem:

The Boeing Company, with the hiring of a blind computer programmer, found that it had to devise a technique for using COBOL, a Common Business Oriented Language for the computer, to convert octal character representations into Braille language on the Honeywell-800/1800. Although special Braille printers are available commercially, their purchase for the use of one man is not economically feasible. The Braille output must enable the blind computer programmer to monitor and evaluate the data generated by his own programs.

The solution:

A computer program that converts print image tape files consisting of 120 characters per second into slightly modified six dot Braille cells. The Braille output is printed 8 lines per inch.

How it's done:

Braille cells consist of three by two matrices of raised dots which represent characters and are identified by the number and location of raised dots within the cells:

1	4
2	5
3	6

To afford a greater ease of recognition, a three by three matrix is utilized by the program:

1	4	7
2	5	8
3	6	9

Normally locations 7, 8, and 9 are left blank to separate one cell from another, but in the case of the octal 77 representation, all locations will contain dots

(continued overleaf)

This document was prepared under the sponsorship of the National Aeronautics and Space Administration. Neither the United States Government nor any person acting on behalf of the United States Government assumes any liability resulting from the use of the information contained in this document, or warrants that such use will be free from privately owned rights.

Thus, there is no great problem in equating these six raised dots within a cell to the six bits of a computer character.

The Braille translator specifications that have been written for processing on the Honeywell 800/1800 in COBOL are:

INPUT: (on Tape Drive AG)

H-800/1800 PRINT IMAGE TAPE FILE(S):
- 120 characters per record
- 1 record per block
- Multiple file reel permitted
- Multiple reel file permitted

OUTPUT: (on Tape Drive AC, and AD if multiple reel)

CREATED FROM:
- Compilation processes
- TSTUPDAT processes
- "First Aid" dumps of Memory
- Automatic dumps of Memory
- Manual dumps of Tape

GENERATING:
- 3 records, containing a maximum of 120 raised dots per record, equals 40 Braille cells.
- 5 records per block
- Multiple reel file but not multiple file reel

DISPOSITION: Honeywell 222-4 printer set to the following specifications:
- 8 lines per inch
- 1 part paper loaded
- Maximum setting for density control
- "Live" rubber electrical tape placed in front of print hammers.

Notes:

1. The Boeing blind programmer is responsible for developing the programs necessary for parts and inventory control. This same process could be used in any industry for the same purpose plus other functions such as finance, configuration management and control, program evaluation and reporting techniques, or any function that a sighted programmer could perform.
2. This technique can be used in any industry to benefit the blind by enabling him to monitor and evaluate the data generated by his own programs.
3. Inquiries concerning this innovation may be directed to:

   COSMIC
   Computer Center
   University of Georgia
   Athens, Georgia 30601
   Reference: B67-10087

Patent status:

No patent action is contemplated by NASA.

Source: R. A. Powell
of the Boeing Company
under contract to
Marshall Space Flight Center
(M-FS-2061)

NASA TECH BRIEF

NASA Tech Briefs are issued to summarize specific innovations derived from the U.S. space program, to encourage their commercial application. Copies are available to the public at 15 cents each from the Clearinghouse for Federal Scientific and Technical Information, Springfield, Virginia 22151.

System Automatically Supplies Precise Analytical Samples of High-Pressure Gases

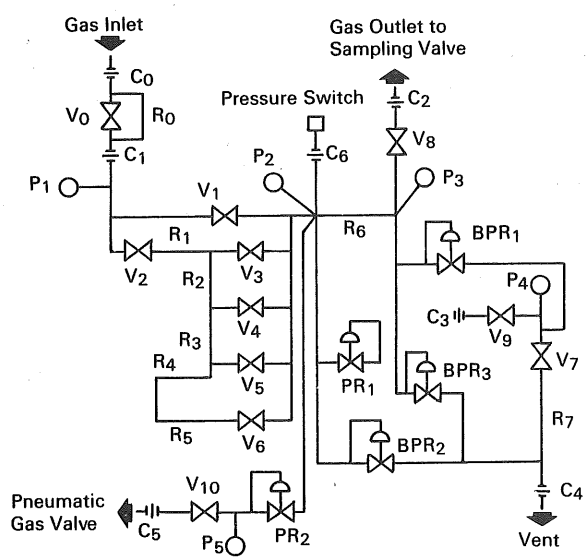

Capillary Restrictors: R_0 to R_7 Incl.
Connectors: C_0 to C_6 Incl.
Pressure Regulators: PR_1 (set at 28 psig), PR_2 (set as needed for external flow)
Back-Pressure Regulators: BPR_1 (set at 32 psig), BPR_2 (set at 120 psig), BPR_3 (set at 33 psig).
Valves: V_0 to V_{10} Incl.

The problem:

To devise a high-pressure-reducing and flow-stabilization system for use in conjunction with a conventional automatic gas sampling valve. This apparatus is required to deliver analytical gas samples at a pressure of 30 psig and a flow rate of 100 milliliters per minute from a gas supply (air, nitrogen, argon, and helium) at pressures of up to 5000 psi. The gas samples, which are to be used for detection of trace constituents by gas chromatography or other standard analytical procedures, must not be changed in composition during the sampling process.

Although conventional two-stage pressure and flow regulators serve quite well in most applications, they present a problem in that the gas samples may be contaminated as they pass through the regulator, or that condensible components from the gas samples may coalesce at the throttling section of the regulator.

The solution:

A system employing parallel capillary restrictors for pressure reduction and downstream throttling valves for flow control. This system, used in conjunction with a standard seven-port sampling valve, greatly minimizes alterations of the sampled gas.

How it's done:

For normal operation, the gas supply line to be sampled is connected to a standard 0.25-inch AN flare fitting (C_0). The gas flow is initially set to pass

(continued overleaf)

This document was prepared under the sponsorship of the National Aeronautics and Space Administration. Neither the United States Government nor any person acting on behalf of the United States Government assumes any liability resulting from the use of the information contained in this document, or warrants that such use will be free from privately owned rights.

through capillary restrictor R_0 and the sum of the flow resistances R_1 through R_5 (representing the respective capillary restrictors). These resistances, selected to compensate for inlet pressures down to 500 psi, are consecutively bypassed, starting with R_5, until pressure P_2 reads 110 psi. For pressures down to 250 psi, the flow is through V_0 and R_1; for pressures below 250 psi, either valve V_0 or V_1 is throttled and the other valve is left wide open. Flow resistance R_6 is selected to give a flow rate of 100 ml/min for a pressure drop from 110 to 40 psi. If the sampling rate decreases because the source pressure is lowered, P_2 will fall below 110 psi. The pressure switch, set at 108 psi, activates a light which remains on until it is reset by a pushbutton switch. Rated sampling flow can be retained with P_2 close to 30 psi. However, the latter may cause some coalescence. P_2 is regulated at 112 psi by back-pressure regulator BPR_2, which vents gas to connector C_4. The flow of the sampling gas is directed to the gas sampling valve by C_2. The pressure in this line is held close to 30 psig by back-pressure regulator BPR_3, whose action can be augmented by BPR_1, if desired.

When the pressure reducer is operating, the C_5 outlet is connected to the pneumatic activator plunger of the gas sampling valve to provide compressed gas (20 to 25 psig) for its automatic operation. The gas valve is triggered by a thermal timing signal from a relay on a phosphorescent cathode ray tube, which serves as the readout device for the hydrogen-flame ionization detector in a standard gas chromatograph.

Notes:

1. When this unit was incorporated into a standard gas chromatograph, analyses of trace amounts of condensible hydrocarbon gases in high-pressure gas supplies were carried out automatically at 30-second intervals.
2. This system is very efficient, reliable, and versatile. It can be used for either general gas sampling application or for high-pressure gas supplies in which extremely low levels of hydrocarbon contaminants must be detected.
3. Inquiries concerning this invention may be directed to:

   Technology Utilization Officer
   Marshall Space Flight Center
   Huntsville, Alabama 35812
   Reference: B67-10090

Patent status:

Inquiries about obtaining rights for the commercial use of this invention may be made to NASA, Code GP, Washington, D.C. 20546.

Source: William M. Langdon, et al
of Illinois Institute of Technology Research Institute
under contract to
Marshall Space Flight Center
(M-FS-1814)

NASA TECH BRIEF

NASA Tech Briefs are issued to summarize specific innovations derived from the U.S. space program, to encourage their commercial application. Copies are available to the public at 15 cents each from the Clearinghouse for Federal Scientific and Technical Information, Springfield, Virginia 22151.

System Maintains Constant Penetration During Fusion Welding

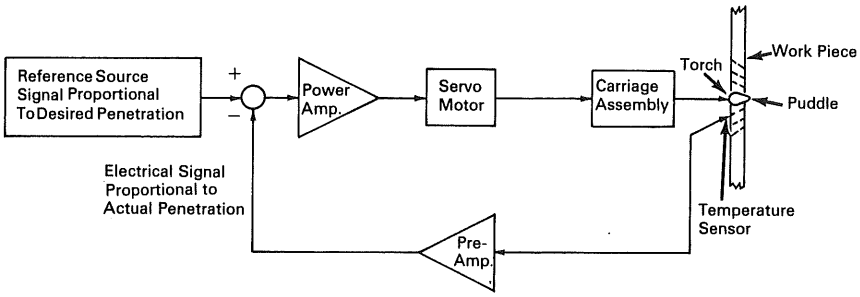

The problem:

In a typical fusion welding process, accurate control of voltage, current, and speed to compensate for minor variations in joint fitup, plate thickness, and shield characteristics has depended on the human operator as prime monitor in the feedback loop. A servo system is needed that will sense such variations and adjust the control parameters to compensate for them.

The solution:

On the assumption that a correlation exists between uniform weld penetration and the temperature gradients occurring in the vicinity of the molten puddle, a system has been developed to sense direct weld properties completely from the arc side and by means of feedback to a servo, make necessary adjustments to travel speed and weld current.

How it's done:

The system sensor consists of a single thermocouple wire of constantan in sliding contact with the aluminum workpiece at a fixed distance from the weld area. This sensor is connected to a servo control system as shown in the diagram.

When the output of the thermocouple equals the reference voltage, the output of the preamplifier is zero, no signal reaches the power amplifier and the two phase servo motor is held at null position. If workpiece temperature at the thermocouple point of contact increases, thermocouple output voltage increases, the preamplifier supplies an input voltage to the power amplifier whose output causes the servo motor to turn. Through a magnetic clutch, the servo motor drives an electrode travel speed potentiometer (not shown) in the direction required to increase the travel speed. This results in a temperature reduction in the workpiece at the thermocouple contact point, reducing thermocouple output and effecting a return to system equilibrium. If workpiece temperature decreases at the thermocouple contact point, opposite polarity voltage is fed to the servo motor to turn it in the opposite direction and reduce carriage speed until system equilibrium is again effected.

Notes:

1. Because the workpiece forms one half of the thermocouple junction, radiated torch interference is eliminated and the response is essentially instantaneous.
2. Tests with aluminum plates both chemically cleaned and not cleaned showed no effect from oxide films on the workpiece surface when using the single wire technique.

(continued overleaf)

This document was prepared under the sponsorship of the National Aeronautics and Space Administration. Neither the United States Government nor any person acting on behalf of the United States Government assumes any liability resulting from the use of the information contained in this document, or warrants that such use will be free from privately owned rights.

3. Inquiries concerning this invention may be directed to:

Technology Utilization Officer
Marshall Space Flight Center
Huntsville, Alabama 35812
Reference: B67-10091

Patent status:

Inquiries about obtaining rights for the commercial use of this invention may be made to NASA, Code GP, Washington, D.C. 20546.

Source: W. M. McCampbell
of Marshall Space Flight Center
and George Cook
of Merrick Engineering Inc.
under contract to
Marshall Space Flight Center
(M-FS-937)

NASA TECH BRIEF

NASA Tech Briefs are issued to summarize specific innovations derived from the U.S. space program, to encourage their commercial application. Copies are available to the public at 15 cents each from the Clearinghouse for Federal Scientific and Technical Information, Springfield, Virginia 22151.

GREMEX–A New Management Training Concept

The explosive growth of science and technology has created a seemingly overwhelming paradox: the effective management of vast manpower and dollar budgets allocated to programs whose goals are well defined, but whose achievement requires a course of action evolved from many alternatives.

In today's space and defense project-oriented research and development the problem is particularly acute, where scientific needs and technological development must be blended and matched against the harsh realities of available manpower, funds, and time schedules.

In an effort to meet these shortcomings, management simulation techniques are being employed to offer training in management problems. GREMEX (Goddard Research Engineering Management Exercise) was developed to provide experience in R&D project decision making from a management rather than technological perspective.

A hypothetical project, S-101, The Orbiting Optical Observatory, is the setting for the GREMEX Exercise. The game begins when a Project Development Plan (PDP) is given to the participant for study. This represents a situation in which the technical objectives have already been established, development and testing activities have been defined, and their costs estimated. An optimum time to complete project development also has been established. In addition, the probability of success of the testing program, i.e., project reliability, has been estimated.

Built into the model are "inherent success probabilities" in regard to reliability, to cost, and to time estimates of each of the development and test activities. As the exercise progresses, these are used to determine the actual time and cost consumed and whether technical performance objectives were realized..

The player-participant in the exercise, who assumes the role of the project manager, influences performance, cost and time estimates, etc., by decisions he is given the opportunity to make—or not, if he so chooses. For example, the participant will determine the type of contract, select the contractor, and award the contract quickly; with proper judgments applied, he will better his chances of achieving time, cost and performance objectives.

Sets of decisions are made and put in the form of computer instructions. The computer readout then gives the status of the project on the basis of the decisions made and the other factors programmed into the game. Plays and reports represent one month time increments.

The player thus has opportunities to test old methods and, if he wishes, to try some new approaches. This he can do without being concerned about the potential rewards or penalties that may weigh his decisions in real life. Real life in this context, is the management of multimillion dollar satellite and other space age projects exploring the universe or sending men to the moon.

A description of this management simulation technique is contained in the report: "Goddard Research Engineering Management Exercise (GREMEX)," October 1966.

Note:

Copies of this report are available from:

Technology Utilization Officer
Goddard Space Flight Center
Greenbelt, Maryland 20771
Reference: B67-10092

(continued overleaf)

This document was prepared under the sponsorship of the National Aeronautics and Space Administration. Neither the United States Government nor any person acting on behalf of the United States Government assumes any liability resulting from the use of the information contained in this document, or warrants that such use will be free from privately owned rights.

Patent status:

No patent action is contemplated by NASA.

Source: M. J. Vaccaro and M. F. Denault
(GSFC-574)

AEC-NASA TECH BRIEF

AEC-NASA Tech Briefs describe innovations resulting from the research and development program of the U.S. AEC or from AEC-NASA interagency efforts. They are issued to encourage commercial application. Tech Briefs are published by NASA and may be purchased, at 15 cents each, from the Clearinghouse for Federal Scientific and Technical Information, Springfield, Virginia 22151.

Strain Gage Circuitry Provides Fatigue Testing Machine with Accurate Cycle Count

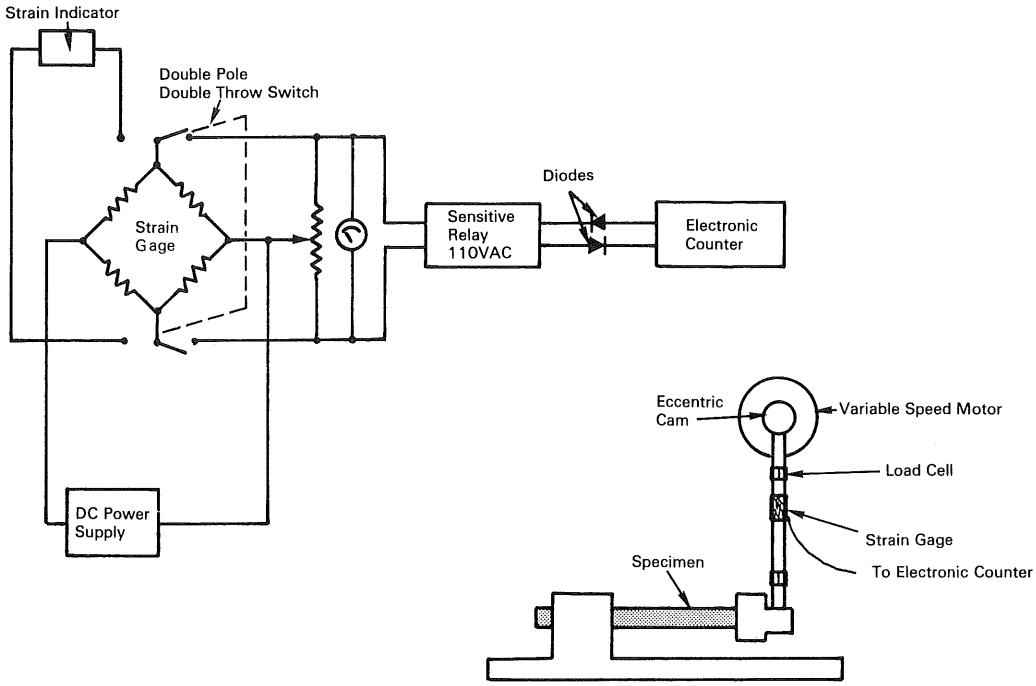

The problem:

To devise a method of testing brittle specimens to determine the number of cycles to fatigue failure. This requires that the fatigue testing machine cycle counter be stopped immediately upon onset of failure. Prior art used control circuits that were activated only when the test specimen was completely sheared. Specimens which showed signs of fatigue but did not shear did not activate the cutoff switch and the cycle counter continued counting nonexistent cycles. A control circuit design was required which would instantly stop the testing machine cycle counter at the first sign of fatigue.

The solution:

The loading arm of the fatigue tester is equipped with a strain gage to record the loading applied to the component. A control circuit utilizes this strain gage to operate the cycle counter. As the component starts to break, the load on the loading arm is reduced and the strain gage stops the operation of the cycle counter.

How it's done:

The strain gage bridge on the loading arm is powered by a dc power supply and its output is nulled by a balanced potentiometer which permits a signal to be fed to an ultrasensitive relay which switches 110 volts to the electronic counter each time the

(continued overleaf)

This document was prepared under the sponsorship of the Atomic Energy Commission and/or the National Aeronautics and Space Administration. Neither the United States Government nor any person acting on behalf of the United States Government assumes any liability resulting from the use of the information contained in this document, or warrants that the use of any information, apparatus, method, or process disclosed in this document may not infringe privately owned rights.

specimen is loaded. A microvoltmeter is connected across the gage output to check the null position of the balanced potentiometer. This circuit is able to detect load arm movements independently of rate of speed. When the specimen starts to break, counting automatically stops. The diodes shown in the counting circuit permit only one counting pulse per fatigue cycle to reach the counter.

Notes:

1. A double throw, 4-pole switch is installed across the leads of the strain gage permitting the strain gage to be transferred from the control circuit to a strain indicator which measures the loading on the loading arm.
2. Inquiries concerning this innovation may be directed to:

   Technology Utilization Officer
   AEC–NASA Space Nuclear Propulsion Office
   U.S. Atomic Energy Commission
   Washington, D.C. 20545
   Reference: B67-10093

Patent status:

No patent action is contemplated by AEC or NASA.

Source: R. Park
of Westinghouse Astronuclear Laboratory
under contract to
Space Nuclear Propulsion Office
(NU-0114)

NASA TECH BRIEF

NASA Tech Briefs are issued to summarize specific innovations derived from the U.S. space program, to encourage their commercial application. Copies are available to the public at 15 cents each from the Clearinghouse for Federal Scientific and Technical Information, Springfield, Virginia 22151.

Heater Control Circuit Provides Both Fast and Proportional Control

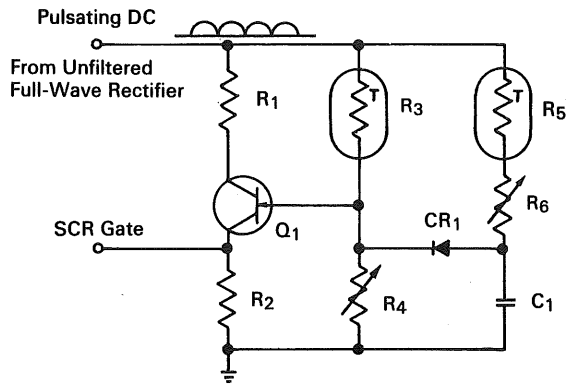

The problem:

To provide a simple and reliable circuit that will supply a heater with full current, from a pulsating dc source, up to a present temperature and then switch over to proportional control for fine temperature regulation. Existing methods require one or more additional transistors and associated circuitry. These additional components result in a lower circuit reliability.

The solution:

Add two resistors and a diode to an existing proportional control circuit.

How it's done:

The figure illustrates a conventional proportional control circuit combined with a fast heating circuit to control a silicon controlled rectifier (SCR) and heater. The fast heating circuit consists of a voltage divider (resistors R_3 and R_4). The fast heating circuit provides a voltage, at low temperatures, sufficient to trigger transistor Q_1 on the leading edge of each input dc pulse so that the heater operates during the full input pulse duration. As the temperature rises above a preset value, the change in resistance of R_3 reduces the voltage supplied by the voltage divider so that heater control is shifted to the proportional control circuit. The SCR gate output from unijunction transistor Q_1 is then delayed on each input dc pulse by the charge time of capacitor C_1 through R_5 and R_6. Because of this delay, the heater does not turn on in the early portion of each input pulse. Diode CR_1 is used to isolate the fast heating circuit from the proportional control circuit.

Notes:

1. When provided with proper sensors, the circuit could be adapted to provide control of other functions, such as pressure, volume, fluid level, motor speed, voltage, light intensity, etc.
2. Inquiries concerning this innovation may be directed to:

   Technology Utilization Officer
   Marshall Space Flight Center
   Huntsville, Alabama 35812
   Reference: B67-10097

(continued overleaf)

This document was prepared under the sponsorship of the National Aeronautics and Space Administration. Neither the United States Government nor any person acting on behalf of the United States Government assumes any liability resulting from the use of the information contained in this document, or warrants that such use will be free from privately owned rights.

Patent status:

No patent action is contemplated by NASA.

Source: R. W. Baslock
of IBM
under contract to
Marshall Space Flight Center
(M-FS-906)

NASA TECH BRIEF

NASA Tech Briefs are issued to summarize specific innovations derived from the U.S. space program, to encourage their commercial application. Copies are available to the public at 15 cents each from the Clearinghouse for Federal Scientific and Technical Information, Springfield, Virginia 22151.

System Enables More Complete Calibrations of Dynamic-Pressure Transducers

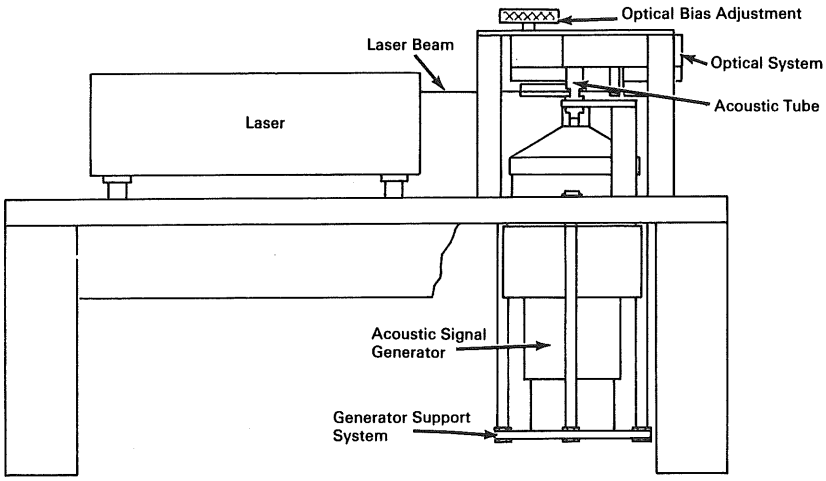

The problem:

To devise a system for absolute pressure calibration of high-intensity, wide frequency-response transducers used to monitor acoustic or aerodynamic pressure fields. The system must enable calibration of the phase characteristics as well as the pressure sensitivities of the transducers. Conventional calibration systems used for such transducers seldom provide information about the phase characteristics of the transducers. In experimental acoustic or aerodynamic pressure-field studies, where the signal outputs of one or more transducers must be correlated, it is essential that the phase characteristics of the transducers be known.

The solution:

A system incorporating a Michelson interferometer using a helium–neon laser light source and interchangeable acoustic signal generators which produce acoustic waves in an acoustic cavity at pressure amplitudes between 140 and 175 db and frequencies between 0.5 to 40 kc/s.

How it's done:

The Michelson interferometer incorporates the acoustic cavity in one of the two optical beam paths. Density fluctuations in the acoustic cavity, which are associated with the pressure fluctuations of the calibrating acoustic signal, produce a time-varying optical interference pattern. This pattern is monitored with a photodiode detector, which produces an electrical output signal characterizing both the absolute amplitude and phase of the pressure fluctuations in the acoustic cavity. Comparison of this signal with the electrical output signal of a transducer positioned in the cavity enables the sensitivity and phase characteristics of the transducer to be determined.

(continued overleaf)

This document was prepared under the sponsorship of the National Aeronautics and Space Administration. Neither the United States Government nor any person acting on behalf of the United States Government assumes any liability resulting from the use of the information contained in this document, or warrants that such use will be free from privately owned rights.

The acoustic signals are generated by one of three interchangeable units: two horn drivers for frequencies up to 16 kc/s and a St. Clair generator for frequencies above 20 kc/s. The acoustic energy from these generators is propagated into a 0.25-inch-diameter telescopic tube at the end of which a 0.25-inch transducer to be calibrated is positioned. Adjustment of the length of the tube allows longitudinal tuning of the cavity, which produces an increased pressure amplitude at the transducer diaphragm. Because longitudinal pressure gradients will exist in the tube, the laser beam scans the cavity in a transverse direction immediately in front of the transducer diaphragm for minimal calibration error. The system is capable of being operated with air or other gases at atmospheric or reduced pressures.

Note:

Inquiries concerning this innovation may be directed to:

Technology Utilization Officer
Marshall Space Flight Center
Huntsville, Alabama 35812
Reference: B67-10099

Patent status:

No patent action is contemplated by NASA.

Source: D. F. Pernet
of Illinois Institute of Technology Research Institute
under contract to
Marshall Space Flight Center
(M-FS-2063)

NASA TECH BRIEF

NASA Tech Briefs are issued to summarize specific innovations derived from the U.S. space program, to encourage their commercial application. Copies are available to the public at 15 cents each from the Clearinghouse for Federal Scientific and Technical Information, Springfield, Virginia 22151.

Double Emitter Suppressed Carrier Modulator Uses Commercially Available Components

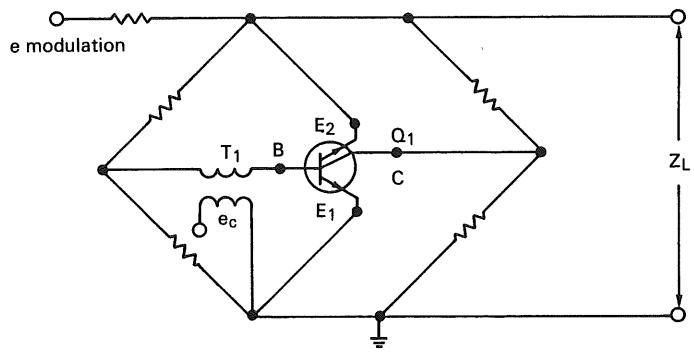

The problem:

To design a suppressed carrier modulator that will develop a signal-to-carrier output ratio of 40 db or greater with a signal input of 2.5 volts peak to peak. All tuning potentiometers must be eliminated and all sideband harmonics must be less than the carrier output amplitude.

The solution:

A double emitter suppressed carrier modulator circuit using commercially available circuit components.

How it's done:

A commercially available double emitter chopper transistor Q_1 (type 3N74) is used to achieve the required carrier suppression by means of symmetrical circuit configuration. To reduce the carrier output from a modulator, a bridge circuit is required to balance the effects of the carrier current as it switches the double emitter transistor from cutoff to saturation. By tying the collector of Q_1 to a resistor bridge and the base-transformer combination to a separate resistor bridge, any voltages developed by the circuits are balanced with respect to the load impedance and ground. The voltage developed across the emitter E_1 of the transistor to the base junction B is equal and opposite to the voltage developed across emitter E_2 to the base junction. Therefore, the E_1 to E_2 voltage sum is approximately zero with respect to the load impedance Z_L. Any stray capacitance between the collector and either emitter, or the base and either emitter is also in the balanced RC bridge network.

The values of the base bridge resistors and the collector bridge resistors are partially determined by the capacitance between: (1) both emitter junctions and the base, and (2) both emitter junctions and the collector. Because of the internal capacitance, the resistors will vary in value depending on the frequency of the carrier e_c through T_1. The circuit develops a signal-to-carrier output ratio to meet the 40 db requirement.

Notes:

1. The circuit, as designed, is intended for use from 450 to 520 kHz carrier frequencies. This approaches the upper frequency limit of the 3N74 double emitter transistor because of internal base-emitter capacitances.

(continued overleaf)

This document was prepared under the sponsorship of the National Aeronautics and Space Administration. Neither the United States Government nor any person acting on behalf of the United States Government assumes any liability resulting from the use of the information contained in this document, or warrants that such use will be free from privately owned rights.

2. Inquiries concerning this invention may be directed to:

Technology Utilization Officer
Marshall Space Flight Center
Huntsville, Alabama 35812
Reference: B67-10101

Patent status:

Inquiries about obtaining rights for the commercial use of this invention may be made to NASA, Code GP, Washington, D.C. 20546.

Source: C. F. Haist and A. Piscopo
of IBM
under contract to
Marshall Space Flight Center
(M-FS-2494)

NASA TECH BRIEF

NASA Tech Briefs are issued to summarize specific innovations derived from the U.S. space program, to encourage their commercial application. Copies are available to the public at 15 cents each from the Clearinghouse for Federal Scientific and Technical Information, Springfield, Virginia 22151.

Parametric Up-Converter Increases Flexibility of Maser

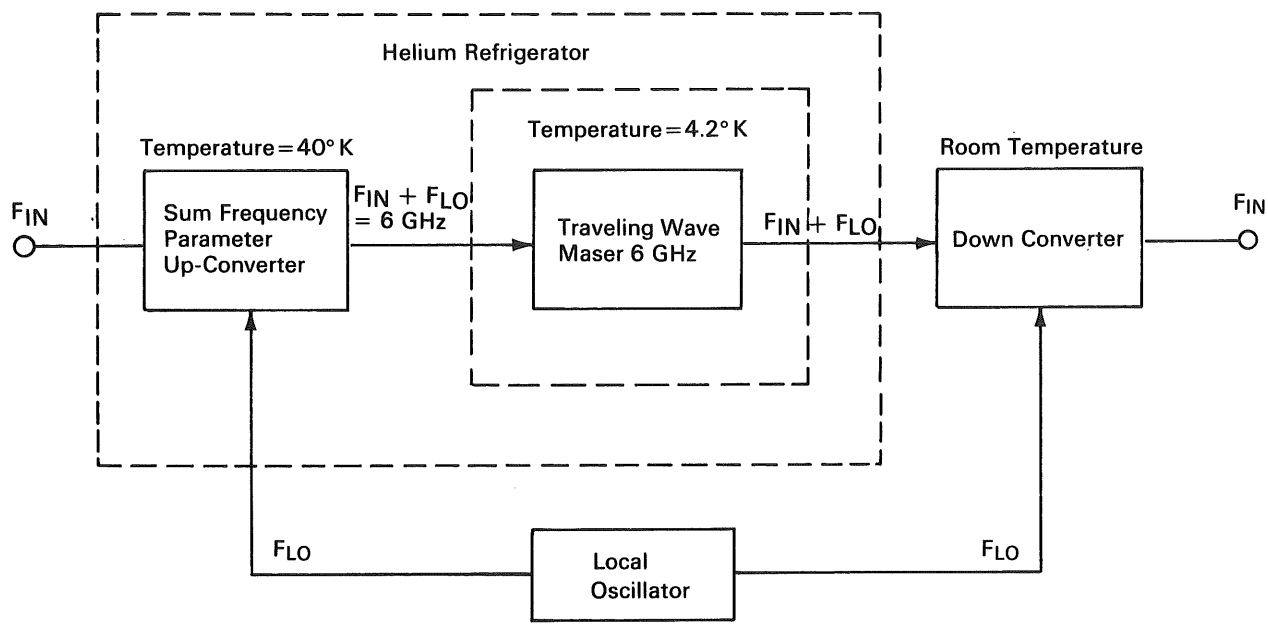

The problem:

The maser (microwave amplification by stimulated emission of radiation) provides the lowest noise amplification of microwave signals available to the communications engineer. However the maser is inherently a narrow band device with a very limited tuning range. Complexity and the cryogenic requirements of the maser amplifier result in a very expensive system, especially when it is necessary to duplicate maser equipment for accommodations of a wider range of frequencies than can be obtained from a single unmodified maser.

The solution:

A parametric up-converter to translate a broad band of signals to the fixed tuned input frequency of the maser. Operation in the range of 1700–2300 Mc has been achieved with this modified maser.

How it's done:

The parametric up-converter is a positive reactance, low gain, very low noise device and results in only a slight noise temperature increase in maser operation. It up-converts signals into the fixed bandpass of the maser by means of an appropriate local oscillator. After low noise maser amplification, the signal is

(continued overleaf)

This document was prepared under the sponsorship of the National Aeronautics and Space Administration. Neither the United States Government nor any person acting on behalf of the United States Government assumes any liability resulting from the use of the information contained in this document, or warrants that such use will be free from privately owned rights.

down-converted to the original signal frequency through use of the same local oscillator.

Notes:

1. The basic technique was tested on a single fixed tuned maser amplifier operating in the 6 GHz region. Spot center frequency tuning ranges of ± 10 percent have been achieved. Larger changes in center frequency can be accomplished by substituting up-converters. Overall gains in excess of 30 db, bandwidth of 60 Mc, and noise temperatures of less than 20°K have been achieved. Continued refinement of this device theoretically should result in performance limited only by the maser itself.
2. The parametric up-converter maser has the distinct advantage of providing maser-like performance with parametric-like tunability. The excellent dynamics and stability of the maser are retained.
3. This technique should find appropriate use in microwave and satellite communications, and radio astronomy. Spectrum analysis may also be considered to offer potential application.
4. Inquiries concerning this invention may be directed to:

   Technology Utilization Officer
   Kennedy Space Center
   Kennedy Space Center, Florida 32899
   Reference: B67-10104

Patent status:

Inquiries about obtaining rights for the commercial use of this invention may be made to NASA, Code GP, Washington, D.C. 20546.

Source: Raymond H. Summy
(KSC-67-98)

NASA TECH BRIEF

NASA Tech Briefs are issued to summarize specific innovations derived from the U.S. space program, to encourage their commercial application. Copies are available to the public at 15 cents each from the Clearinghouse for Federal Scientific and Technical Information, Springfield, Virginia 22151.

Liquid Hydrogen Densitometer Utilizes Open-Ended Microwave Cavity

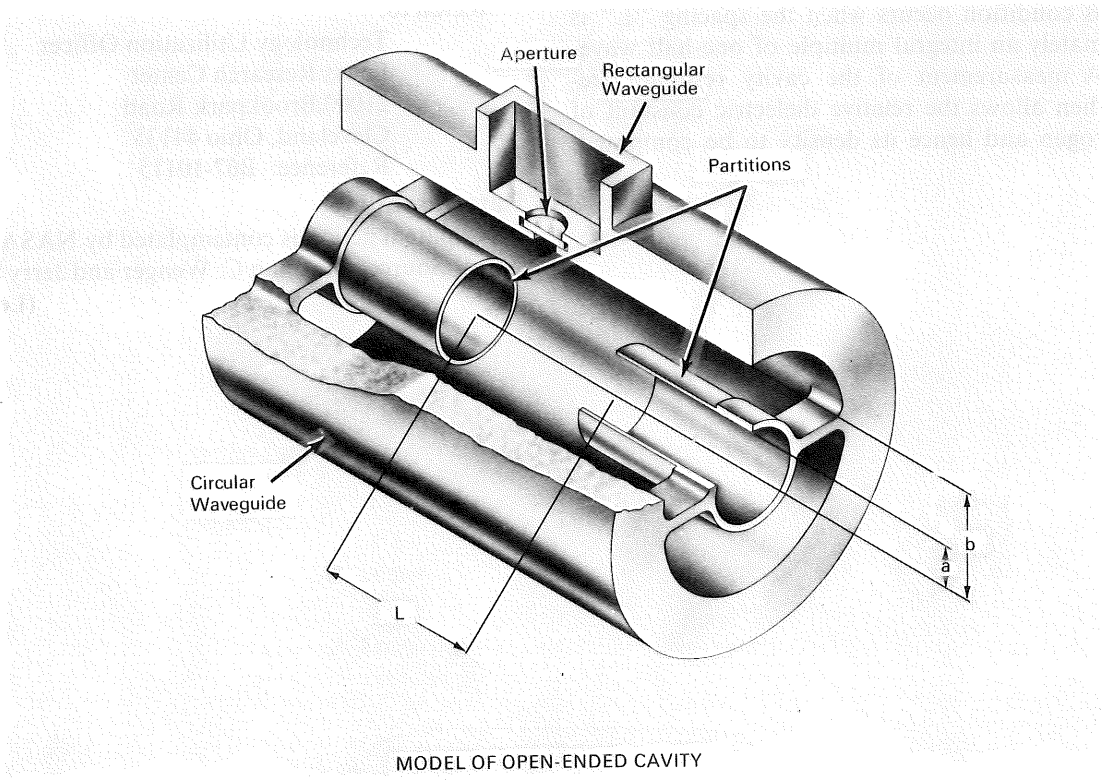

MODEL OF OPEN-ENDED CAVITY

The problem:

To develop a method for the direct measurement of the density of flowing liquid, gaseous, or two-phase hydrogen.

The solution:

Microwave cavities have been used for many years to measure the densities of fluids and gases. The shift in the resonant frequency when a fluid is introduced into an evacuated microwave cavity gives a measure of the dielectric constant of the fluid. The density of the fluid can then be determined from the dielectric constant data by using either a suitable theory on electric polarization for that particular fluid or an empirical or experimentally obtained formula. An open-ended microwave cavity has recently been developed to measure the density of flowing liquid, gaseous, or two-phase hydrogen. The operation of the cavity is based

(continued overleaf)

This document was prepared under the sponsorship of the National Aeronautics and Space Administration. Neither the United States Government nor any person acting on behalf of the United States Government assumes any liability resulting from the use of the information contained in this document, or warrants that such use will be free from privately owned rights.

on derived relations between the cavity resonant frequency, the dielectric constant of hydrogen, and the density of hydrogen.

How it's done:

The cavity consists of a circular waveguide of radius "b" that is terminated at each end with thin coaxial cylindrical partitions of radius "a" that are separated by a distance "L". Because the partitions are extremely thin, they offer little resistance to the flow of hydrogen through the cavity. Microwave energy is supplied to the cavity through the small aperture in the side wall. If the cylindrical partitions are sufficiently long, they will act as perfect reflectors to the microwave energy over a frequency range whose limits are dependent on the dimensions "a" and "b". The cavity is resonant when the spacing between the partitions is adjusted so that the reflections are constructive. This condition occurs when the spacing "L" is approximately an integral multiple of one-half wavelength. A measurement of the cavity resonant frequency then allows the relative dielectric constant of the hydrogen and hence its density to be computed.

Notes:

1. Hydrogen density measurements that were made by using this open-ended microwave cavity were in excellent agreement with density calculations that were based on pressure–temperature data. Accurate density measurements can also be taken for two-phase hydrogen if the hydrogen gas bubbles can be reduced sufficiently in size and distributed uniformly in the liquid.
2. Additional technical details are contained in: "Liquid Hydrogen Density Measurements Using an Open Ended Microwave Cavity," by Norman C. Wenger and Jerry Smetana, NASA TN D-3680, October 1966, available from the Clearinghouse for Scientific and Technical Information, Springfield, Virginia 22151, price $1.00.
3. Inquiries concerning this innovation may be directed to:

   Technology Utilization Officer
   Lewis Research Center
   21000 Brookpark Road
   Cleveland, Ohio 44135
   Reference: B67-10115

Patent status:

No patent action is contemplated by NASA.

Source: Norman C. Wenger and Jerry Smetana
(Lewis-390)

NASA TECH BRIEF

NASA Tech Briefs are issued to summarize specific innovations derived from the U.S. space program, to encourage their commercial application. Copies are available to the public at 15 cents each from the Clearinghouse for Federal Scientific and Technical Information, Springfield, Virginia 22151.

Polynomial Manipulator AP-168

The problem:

A single program was needed to combine the many different analysis techniques used to evaluate and manipulate polynomials.

The solution:

The Linear Systems Design Evaluation Program, AP-168 was written as a pseudo instruction abstraction which allows the user to enter polynomials of the Laplace operators and to manipulate these polynomials in any way he chooses.

How it's done:

Input data are coded to indicate type of input as follows:

P Polynomial
N Numerator of polynomial ratio
D Denominator of polynomial ratio
C Constants

This code is placed in column 9 of the card. The identification number by which the data is to be referenced is placed in columns 11–12. Data may be in any order, as the code and identification number are used for the arrangement internally. The end of the input data is denoted by placing a nonzero integer in column 1 of the last P, N, D, or C card.

The program makes use of three so-called registers, the AC, MQ, and GREG. The AC and MQ hold the various polynomials and polynomial ratios as a result of the manipulations performed. The GREG holds the constant used in the last manipulation performed using a constant. *Specific registers are used for each operation code.* Addition, subtraction, and *all* operations with constants use the AC register. For the other codes, most operations on the MQ are denoted by a Q as the last letter of the code.

In setting up the problem, the polynomials, polynomial ratios, and constants are referenced by such names as P1, R5, C3, etc. The polynomials and polynomial ratios are held internally in separate arrays; therefore R1 is different from P1. Once manipulations have been started, the mode of operation must be consistent throughout (the mode is either R or P). Provision is made for changing modes using the CHM operation code. There is also an automatic change in mode from P to R when polynomials are divided. Only polynomials may be manipulated when in the P mode, unless CHM R is used or two polynomials are divided. Only ratios may be manipulated when in the R mode, unless CHM P is used.

AP-168 provides an error recovery, should an error in the input data, manipulations, or control cards occur. A number of cases may be input, and should an error occur in the input data, the program will print out all cards skipped until it reaches a $DATA card with no error recovery option. The program will then start over. Should an illegal change in mode, operation code, etc., be entered in the manipulations, the program will print all cards skipped until *either* a $DATA *or* $JAM card with no error recovery option is reached. The Fortran monitor will give the normal error stop, and the program will be deleted when an error occurs in a library routine such as SINF, COSF, etc. If the word NOGO appears in columns 13–16 of a $DATA or $JAM card, the error recovery recognizes this as a signal to delete the whole job from the computer. These options allow saving time on sections, depending on previous manipulations where errors occurred. The NO–NOGO options are ignored unless an error occurs.

The following errors will cause the error recovery routine to be entered: illegal change of mode of operation, illegal control work or operation code (misspelling), using identification numbers outside the

(continued overleaf)

This document was prepared under the sponsorship of the National Aeronautics and Space Administration. Neither the United States Government nor any person acting on behalf of the United States Government assumes any liability resulting from the use of the information contained in this document, or warrants that such use will be free from privately owned rights.

allotted range, punching in incorrect columns, and omitting required input data.

The basic restrictions of the program are: input polynomial identification numbers must be between 1 and 40 inclusive; input polynomial ratio identification numbers must be between 1 and 20 inclusive; input constant identification numbers must lie between 1 and 100 inclusive; input polynomials or polynomial ratios must be of degree 25 or less; generated polynomial or polynomial ratios must be of degree 50 or less; stored polynomials must have identification numbers between 100 and 139 inclusive; stored polynomial ratios must have identification numbers between 100 and 119 inclusive; maximum of 50 gains entered for root locus; maximum of 300 points plotted in the frequency response (all calculated points are printed; first 300 are also plotted); and maximum of 500 points plotted in the time response (all calculated points are printed, first 500 are also plotted).

Notes:

1. This program can be used to establish guidance and control stability criteria for servomechanism systems.
2. Inquiries concerning this program may be directed to:

   COSMIC
   Computer Center
   University of Georgia
   Athens, Georgia 30601
   Reference: B67-10103

Patent status:

Inquiries about obtaining rights for the commercial use of this invention may be made to NASA, Code GP, Washington, D.C. 20546.

Source: G. E. Tutt, et al
of North American Aviation, Inc.
under contract to
Manned Spacecraft Center
(MSC-1231)

NASA TECH BRIEF

NASA Tech Briefs are issued to summarize specific innovations derived from the U.S. space program, to encourage their commercial application. Copies are available to the public at 15 cents each from the Clearinghouse for Federal Scientific and Technical Information, Springfield, Virginia 22151.

RF Inductor Has High Q, Is Stable at Higher Temperatures

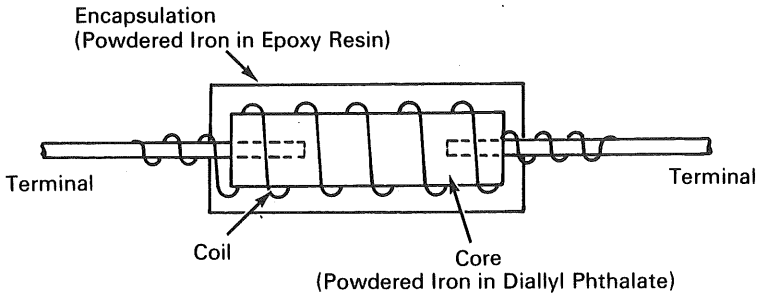

The problem:

To design an encapsulated rf inductor that will have a relatively high Q and remain stable for long periods of time at temperatures up to more than 275°F.

The solution:

An inductor comprising an insulated coil wound on a core consisting of powdered iron in a binder of diallyl phthalate. The core and coil are encapsulated in an epoxy resin filled with powdered iron. Two terminals, projecting from the ends of the core, are soldered to the uninsulated ends of the coil.

Inductors of this design have a Q ranging from 90 to 100, which shows a negligible decrease after the inductors are heated at temperatures up to 275°F for 2000 hours. These inductors should be useful for several hundred hours at temperatures up to 500°F. Conventional inductors (of the same physical size) which typically employ a powdered iron core in a phenolic binder and an encapsulation consisting of an epoxy resin without a magnetic filler have a Q ranging from 55 to 65. The Q of these inductors may decrease by as much as 40 percent after the inductors are subjected to 230°F for 2000 hours.

Notes:

1. Although the Q of the improved inductor can be increased by increasing the proportion of powdered iron in the core, this proportion should not exceed 87 percent by weight to keep the core from becoming too brittle.
2. Inquiries concerning this invention may be directed to:

   Technology Utilization Officer
   Jet Propulsion Laboratory
   4800 Oak Grove Drive
   Pasadena, California 91103
   Reference: B67-10106

Patent status:

Inquiries about obtaining rights for the commercial use of this invention may be made to NASA, Code GP, Washington, D.C. 20546.

Source: E. M. Wiler
(JPL-1019)

Category 01

This document was prepared under the sponsorship of the National Aeronautics and Space Administration. Neither the United States Government nor any person acting on behalf of the United States Government assumes any liability resulting from the use of the information contained in this document, or warrants that such use will be free from privately owned rights.

NASA TECH BRIEF

NASA Tech Briefs are issued to summarize specific innovations derived from the U.S. space program, to encourage their commercial application. Copies are available to the public at 15 cents each from the Clearinghouse for Federal Scientific and Technical Information, Springfield, Virginia 22151.

Computer Program Reduces Calculation Time of Normal Response Functions

The problem:

To devise a method for rapidly calculating parameters of maximum likelihood estimates (MLE's) resulting from sensitivity experiment data populations given in cumulative normal response functions. Experiments requiring estimates of the sensitivity threshold include impact and electrical sensitivity, projectile penetrability and environmental studies, and biological studies such as dosage mortality. The method should provide parameter estimates of the portion of this population (response fractions) which represent the events occurring at a sensitivity threshold. Parameters of these data are often manually computed, a time-consuming process which yields estimates of limited accuracy.

The solution:

A Fortran II computer program that uses the Newton–Raphson iterative procedure to calculate the mean and standard deviation of portions of the cumulative normal response function. Initial first guesses in the iterative procedure may be calculated by the program, or by plotting the fraction of responses occurring at the sensitivity threshold on normal probability paper.

The conditions for selecting either option to calculate the first guess are determined by two factors: well centered vs badly centered data, a few vs many stimulus levels.

For well centered response fractions taken at only a few stimulus levels, the threshold data may be plotted on normal probability paper, with the results used as first guesses. Well centered data taken at a greater number of stimulus levels are inserted into the MOS (Minimum Overlapping Subset) specification statement of the program, and the first guess is computer calculated.

For badly centered data, normal probability paper may not be used, and the first guess is computer calculated.

The program also provides for calculation of the covariance matrix and the confidence band within which the estimates will be found.

Available information pertaining to the program includes: (1) a program description and mathematical analyses of the program, (2) formulas for maximum likelihood estimates of the parameters, (3) numerical methods for obtaining the estimates, (4) a complete program listing, and (5) examples illustrating the use of options as applied to specific data characteristics.

Note:

Inquiries concerning this invention may be directed to:

Technology Utilization Officer
Marshall Space Flight Center
Huntsville, Alabama 35812
Reference: B67-10108

Patent status:

Inquiries about obtaining rights for the commercial use of this invention may be made to NASA, Code GP, Washington, D.C. 20546.

Source: D. Rothman, M. J. Alexander, and J. M. Zimmerman
of North American Aviation, Inc.
under contract to
Marshall Space Flight Center
(M-FS-1517)

Category 01

This document was prepared under the sponsorship of the National Aeronautics and Space Administration. Neither the United States Government nor any person acting on behalf of the United States Government assumes any liability resulting from the use of the information contained in this document, or warrants that such use will be free from privately owned rights.

NASA TECH BRIEF

NASA Tech Briefs are issued to summarize specific innovations derived from the U.S. space program, to encourage their commercial application. Copies are available to the public at 15 cents each from the Clearinghouse for Federal Scientific and Technical Information, Springfield, Virginia 22151.

Fixture Tests Bellows Reliability Through Repetitive Pressure/ Temperature Cycling

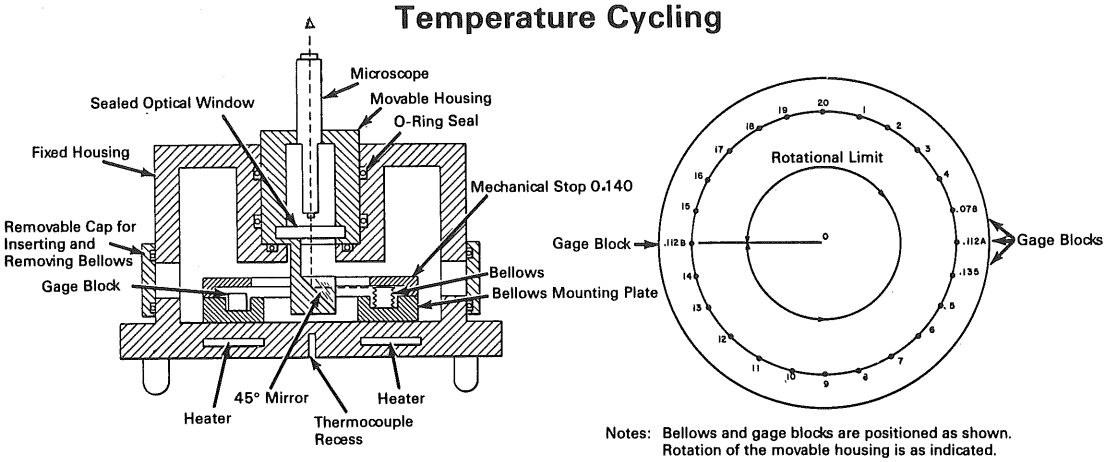

Notes: Bellows and gage blocks are positioned as shown. Rotation of the movable housing is as indicated.

The problem:

In precision accelerometers used in inertial systems, four small bellows are used in each instrument and are subjected to repetitive pressure/temperature cycles as they provide volume change compensation through fluctuating thermal gradients. To assure reliable accelerometers, it is necessary to establish the operating pressure/temperature capability and life expectancy of the bellows involved.

The solution:

A test fixture designed to explore the reliability of bellows by establishing their ability to withstand repetitive over-stress pressure cycling at elevated temperatures.

How it's done:

The fixture includes a circular bellows mounting plate having 24 drilled holes about its perimeter at 15 degree intervals. Four precision gage blocks and 20 bellows (for test) are positioned in the mounting plate holes. A mechanical stop attached to the mounting plate prevents bellows extension beyond 0.140 inch from normal. Heaters and a thermocouple are recessed in the base of a fixed housing containing the bellows mounting plate. Attached to the fixed housing is a movable housing containing a microscope, a rack and pinion (not shown) for focusing the microscope, a sealed optical window, and a mirror and a light source (not shown). A control console provides pressure cycling to each bellows under test by application of measured levels of pressure and vacuum in accordance with predetermined cyclic timing. The control console also supplies power for the light source and for the heaters which are operated on and off in accordance with the test profile. Pressure and vacuum gages plus a temperature gage are also mounted on the console for test monitoring.

In operation, the movable housing is rotated about its axis toward each bellows in turn, as specific conditions of pressure, vacuum, and temperature are introduced. The light source is behind the bellows and measurements of bellows performance under test are taken through the optical path indicated by the dotted line. The microscope barrel is a micrometer

(continued overleaf)

This document was prepared under the sponsorship of the National Aeronautics and Space Administration. Neither the United States Government nor any person acting on behalf of the United States Government assumes any liability resulting from the use of the information contained in this document, or warrants that such use will be free from privately owned rights.

type divided in 0.00005-inch increments and the fixed vertical reticle is aligned with one of the gage block centerlines by rotation of the movable housing. By a vernier, the reticle is then adjusted to the gage block height and the vernier reading recorded. The movable housing is rotated to align the microscope reticle with the first bellows to be tested and the vernier is adjusted to bring the reticle to the bellows height. This vernier reading is recorded and the test is begun. As each predetermined condition of pressure, vacuum, and temperature is imposed on the test bellows, the microscope vernier is adjusted to align the reticle with the bellows height and the readings recorded. Comparison of the vernier readings relating to bellows height with the vernier reading of test block height permit evaluation of the bellows through repetitive pressure/temperature cycling.

Notes:

1. This tool could be used effectively in quality control and reliability programs.
2. Inquiries concerning this invention may be directed to:

   Technology Utilization Officer
   Manned Spacecraft Center
   Houston, Texas 77058
   Reference: B67-10111

Patent status:

Inquiries about obtaining rights for the commercial use of this invention may be made to NASA, Code GP, Washington, D.C. 20546.

Source: Carl Levinson
of Sperry Gyroscope Company
under contract to
Manned Spacecraft Center
(MSC-1176)

NASA TECH BRIEF

NASA Tech Briefs are issued to summarize specific innovations derived from the U.S. space program, to encourage their commercial application. Copies are available to the public at 15 cents each from the Clearinghouse for Federal Scientific and Technical Information, Springfield, Virginia 22151.

Detection of Entrapped Moisture in Honeycomb Sandwich Structures

The problem:

Bonded honeycomb sandwich structures have been developed to offer structural qualities that equal prior configurations of much greater weight. However, entrapped moisture within the intercellular portions of the honeycomb has posed problems and its detection is a major concern. Many moisture detecting techniques other than weighing have been investigated.

The solution:

A thermal neutron moisture detection system that establishes the presence of entrapped moisture in intercellular areas down to a level of 0.0015 pound per cubic foot.

How it's done:

A radium/beryllium fast neutron source is used to bombard a specimen with neutrons of a known moderate source strength. Upon collision with the particles of the target nucleus, the particles of the incident nuclear radiation lose much of their kinetic energy, causing emission of thermal (slow) neutrons from the target nucleus. The emitted thermal neutrons are detected and counted by a boron trifluoride thermal neutron detector and the count is displayed by means of a scaler and rate meter. The number of counts registered above a predetermined background with time is a function of the concentration of the target nucleus, entrapped moisture.

Notes:

1. Radiographic, isotope dilution, radionuclide activation, eddy current variation, and fluoroscopy methods were investigated but proved less sensitive and/or reliable than the technique described.
2. Inquiries concerning this invention may be directed to:

   Technology Utilization Officer
   Manned Spacecraft Center
   Houston, Texas 77058
   Reference: B67-10116

Patent status:

Inquiries about obtaining rights for the commercial use of this invention may be made to NASA, Code GP, Washington, D.C. 20546.

Source: William B. Hallmark
of North American Aviation, Inc.
under contract to
Manned Spacecraft Center

(MSC-1103)

Category 01

This document was prepared under the sponsorship of the National Aeronautics and Space Administration. Neither the United States Government nor any person acting on behalf of the United States Government assumes any liability resulting from the use of the information contained in this document, or warrants that such use will be free from privately owned rights.

NASA TECH BRIEF

NASA Tech Briefs are issued to summarize specific innovations derived from the U.S. space program, to encourage their commercial application. Copies are available to the public at 15 cents each from the Clearinghouse for Federal Scientific and Technical Information, Springfield, Virginia 22151.

TV Synchronization System Features Stability and Noise Immunity

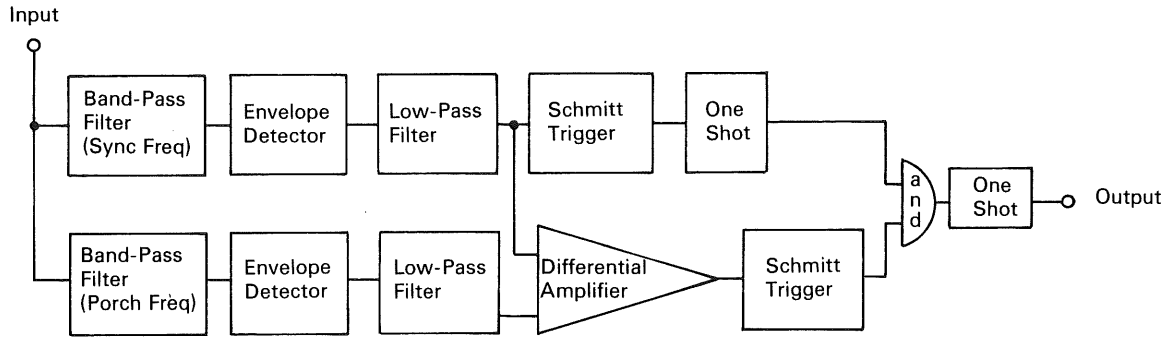

The problem:

In television systems, specific portions of the video information (black-to-white levels) fall at designated frequencies. Similarly, the sync pulses fall in a specific very narrow frequency band near the limit of the transmission channel. Video information falls between the FM carrier and the sync frequencies. A tuned rf filter is used in the receiver to accept only the sync tip frequency. A noise spike present in the narrow pass band of the filter produces an ambiguous sync signal that results in a horizontal jitter in the video presentation.

The solution:

Circuitry that introduces an additional sync level, also sensed by a tuned filter, as a back porch on the sync pulse. Presence of simultaneous signals at both sync and porch frequencies provides a sync identification, in the presence of noise, from which a coincidence circuit can generate sync pulses having the required stability and noise immunity.

How it's done:

Referring to the figure, the sync frequency bandpass filter, envelope detector, and low pass filter are shown connected as in a basic system. A duplicate channel is introduced here to sense and translate the porch frequency. Because noise at the summing point input to the differential amplifier is derived from two separate frequency domains of equal bandwidth but from statistically separate sources, the noise is added, the sum being 3 db greater than either separately. Peak-to-peak signal is, therefore, 6 db so that, for a given signal-to-noise condition, jitter due to noise vs rise time is 3 db less than would be the case without the differential amplifier.

Because sync immediately precedes porch and the transition of interest is common to both (the trailing edge of sync corresponds in time to the leading edge of porch), the leading edge of sync is sensed as a time reference only for the purpose of enabling the next transition into porch frequency to be used as the sync time reference.

The sync channel Schmitt trigger fires its delay one-shot which has a time duration slightly longer than the maximum sync duration. As soon as the porch pulse is received, the porch channel Schmitt trigger is fired. Coincidence of output from the sync channel one-shot and porch channel Schmitt trigger causes an output from the *and* gate that triggers the output one-shot to provide the actual sync pulse to the horizontal sweep.

(continued overleaf)

This document was prepared under the sponsorship of the National Aeronautics and Space Administration. Neither the United States Government nor any person acting on behalf of the United States Government assumes any liability resulting from the use of the information contained in this document, or warrants that such use will be free from privately owned rights.

Notes:

1. This circuitry would be useful in an industrial television application where horizontal sync must be ultrastable in the presence of noise and vertical sync is available from power line frequency.
2. Inquiries concerning this invention may be directed to:

   Technology Utilization Officer
   Jet Propulsion Laboratory
   4800 Oak Grove Drive
   Pasadena, California 91103
   Reference: B67-10118

Patent status:

Inquiries about obtaining rights for the commercial use of this invention may be made to NASA, Code GP, Washington, D.C. 20546.

Source: Frederick P. Landauer

(JPL-915)

NASA TECH BRIEF

NASA Tech Briefs are issued to summarize specific innovations derived from the U.S. space program, to encourage their commercial application. Copies are available to the public at 15 cents each from the Clearinghouse for Federal Scientific and Technical Information, Springfield, Virginia 22151.

Personal Communication System Combines High Performance with Miniaturization

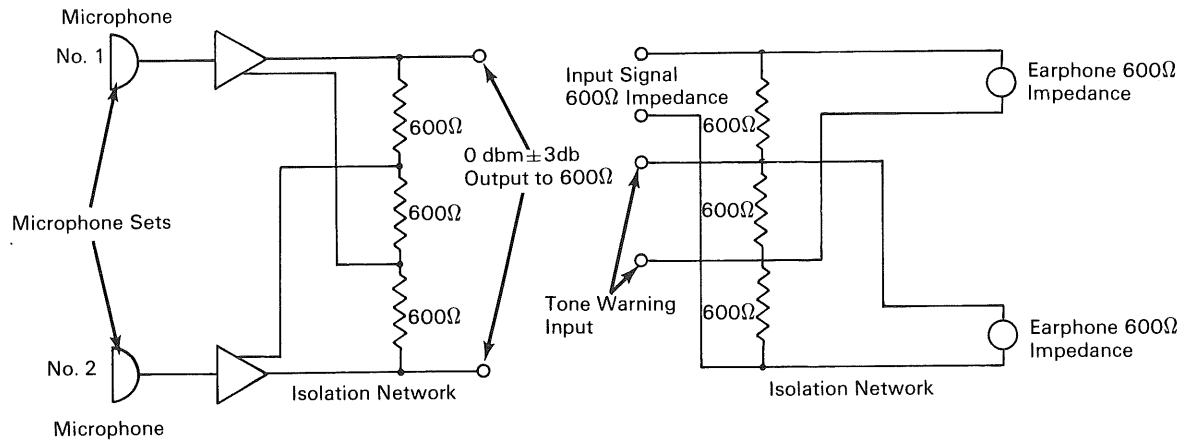

MICROPHONE CIRCUITRY

EARPHONE CIRCUITRY

The problem:

Specifications for a personal communication electronic system required a high level audio output capability in the earphone subassemblies and high signal-to-noise ratio in the microphone and amplifier assembly. Additionally, the specifications required that all system components be miniaturized for use in limited workspace such as space suit applications.

The solution:

A personal communication system that provides miniaturized components that incorporate high level signal characteristics plus noise rejection in both microphone and earphone circuitry.

How it's done:

The microphone (based on a commercially available microphone concept) is designed to overcome such spacecraft flight problems as size, ambient noise level, and rf interference. The total integrated unit consists of a housing, two-part acoustic tube assembly, microphone amplifier, isolation network, plus mounting provisions and wiring harness. For redundancy, two microphones provide an output level through an isolation network to a balanced load (600±60Ω) of 0 dbm±3 db for an input of 96 db and 10 db±3 db for an input of 116 db.

Each earphone assembly includes 6 transducers to obtain a high level audio output of improved quality in the presence of ambient noise. Each assembly is flexible for use in an earmuff or directly into the ear, and consists of the transducers, isolation network, housing, plus mounting provisions and wiring harness. A tone warning input signal circuit is also provided to alert the operator to incoming intelligence. With two earphones connected to the isolation network (driven at 4 milliwatts sinewave), the output sound pressure level of each earphone, measured at 1000 cps in a 6 cc cavity, is 108±3 db (0.0002 dyne/cm^2).

(continued overleaf)

This document was prepared under the sponsorship of the National Aeronautics and Space Administration. Neither the United States Government nor any person acting on behalf of the United States Government assumes any liability resulting from the use of the information contained in this document, or warrants that such use will be free from privately owned rights.

Notes:

1. This system meets all specification tests including electromagnetic, humidity, temperature, vibration, vacuum, and shock.
2. This system should be useful where workspace requirements necessitate miniaturization and very high levels of noise rejection.
3. Inquiries concerning this innovation may be directed to:

   Technology Utilization Officer
   Manned Spacecraft Center
   Houston, Texas 77058
   Reference: B67-10119

Patent status:

No patent action is contemplated by NASA.

Source: Norman D. Atlas
of North American Aviation, Inc.
under contract to
Manned Spacecraft Center
(MSC-720, 722)

NASA TECH BRIEF

NASA Tech Briefs are issued to summarize specific innovations derived from the U.S. space program, to encourage their commercial application. Copies are available to the public at 15 cents each from the Clearinghouse for Federal Scientific and Technical Information, Springfield, Virginia 22151.

Edge-Type Connectors Evaluated by Electrical Noise Measurement

An electrical noise measurement system is designed to measure the noise generated by edge-type connectors and circuit cards when the connector and circuit card are subjected to sinusoidal vibration. This is accomplished by providing a signal across the contact area and monitoring the signal change during vibration by means of differential amplifier techniques. A vibration fixture provides a means for supporting an etched circuit card and various configurations of circuit card connectors during sinusoidal vibration testing in each of three mutually orthogonal directions. Vibration input parameters selected are ±25 g peak over a frequency range of 30 to 3000 Hz. An additional vibration requirement concerning the fixture is that fixture dynamic response over the test frequency range would not significantly affect the resonance characteristics of the card/connector combination.

Noise measured can be expressed as a varying change in total contact resistance. Theory, and previous investigation indicate that any relative movement between contact and card pad (to 0.001 inch) has the effect of the destruction of surface films and introduces semiconductor effects. In this investigation, data has been free from open circuit effects because of the low level open circuit voltage of 18 mv.

Notes:

1. Throughout the investigation, there were no indications of complete opening of the card/connector circuit and noise level amplitude varied from 0 to 1 mv with the majority of measurements falling below 500 microvolts peak-to-peak.
2. This innovation is more completely described in Marshall Space Flight Center Document D5-13286-2, dated October 6, 1966, "Test Procedures, Electrical Noise Level Study".
3. Inquiries concerning this innovation may be directed to:

   Technology Utilization Officer
   Marshall Space Flight Center
   Huntsville, Alabama 35812
   Reference: B67-10125

Patent status:

No patent action is contemplated by NASA.

Source: S. L. Brummett
of The Boeing Company
under contract to
Marshall Space Flight Center

(M-FS-2243)

Category 01

This document was prepared under the sponsorship of the National Aeronautics and Space Administration. Neither the United States Government nor any person acting on behalf of the United States Government assumes any liability resulting from the use of the information contained in this document, or warrants that such use will be free from privately owned rights.

AEC-NASA TECH BRIEF

AEC-NASA Tech Briefs describe innovations resulting from the research and development program of the U.S. AEC or from AEC-NASA interagency efforts. They are issued to encourage commercial application. Tech Briefs are published by NASA and may be purchased, at 15 cents each, from the Clearinghouse for Federal Scientific and Technical Information, Springfield, Virginia 22151.

Modified Univibrator Compensates for Output Timing Errors

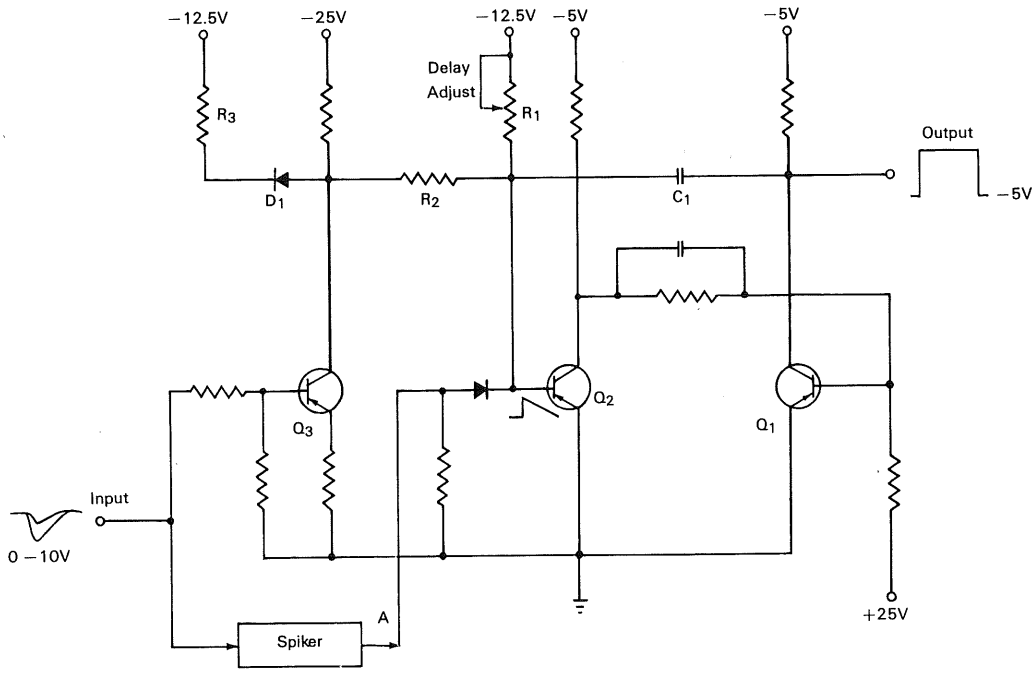

The problem:

To design a univibrator circuit capable of time-synchronizing the trailing edge of the output pulse with the origin of the input pulse. Conventional univibrator circuits are subject to output pulse timing errors produced by varying input pulse amplitudes.

The solution:

A simple, one-stage, delay compensation amplifier, added to the conventional univibrator circuitry so as to produce a univibrator output pulse whose trailing edge is independent of the amplitude of the input pulse.

How it's done:

The timing circuit consists of conventional univibrator Q_1 and Q_2, a spiker circuit, and one-stage compensation transistor amplifier Q_3.

In the quiescent state, Q_2 is conducting; Q_1 and Q_3 are biased off. An input pulse is applied simultaneously to the spiker circuit and to the base of Q_3. The spiker applies a positive spike to the base of Q_2, switching it off. When Q_2 stops conducting, sufficient current flows to the base of Q_1 to bias it into the conduction region. Q_1 turns on and generates a positive-going output pulse. Q_2 is held in the cut-off state by

(continued overleaf)

This document was prepared under the sponsorship of the Atomic Energy Commission and/or the National Aeronautics and Space Administration. Neither the United States Government nor any person acting on behalf of the United States Government assumes any liability resulting from the use of the information contained in this document, or warrants that the use of any information, apparatus, method, or process disclosed in this document may not infringe privately owned rights.

the potential across capacitor C_1 and remains biased off until C_1 is sufficiently discharged.

In a conventional univibrator, the discharge of C_1 is governed by the current flowing through R_1. However, in the compensated univibrator, the discharge of C_1 is governed by a discharge path through both R_1 and R_2. The potential existing at point A determines the discharge current through R_2.

An input pulse drives Q_3 into a state of increasing conduction, causing the point A potential to increase from −22v to the clamp potential of −12.5v. This decreases the discharge current flowing through R_2. From the time the clamp potential is reached to the end of the discharge, the discharge rate of C_1 is nearly constant and slower than its initial discharge rate. For high amplitude input pulses, the threshold of Q_3 and the clamp potential are reached quickly. For low amplitude input pulses, the potential at point A increases less rapidly, and the nearly constant discharge rate is reached at a later time. Thus C_1 discharges more rapidly for low amplitude input pulses than for high amplitude pulses, causing the compensated univibrator to turn off earlier for low amplitude input pulses than for high amplitude input pulses.

Low amplitude inputs reach the triggering threshold of Q_2 later than high amplitude inputs, causing a delay in the occurrence of the leading edge of the output pulse. The discharge control of C_1, however, compensates for this delay by producing narrow output pulses for small inputs and wide output pulses for large inputs. This pulse width compensation effect causes the trailing edge of all output pulses to occur at the same time regardless of input pulse amplitude.

Notes:

1. Manual adjustment of R_1 determines the pulse delay time through C_1 in the compensated circuit.
2. This circuit can function with double RC-differentiated input pulses and requires no delay-line wave shaping or zero crossing techniques.
3. Resistor R_3 and catching diode D_1 are added in the collector circuit of Q_3 to enhance the compensation for input pulses of high amplitude.
4. Additional details are contained in: *The Review of Scientific Instruments,* vol. 34, no. 11, pp. 1248–1253, November, 1963.
5. Inquiries concerning this innovation may be directed to:

   Office of Industrial Cooperation
   Argonne National laboratory
   9700 South Cass Avenue
   Argonne, Illinois 60439
   Reference: B67-10130

Source: M. G. Strauss
Electronics Division
(ARG-85)

Patent status:

Inquiries about obtaining rights for commercial use of this innovation may be made to:

Mr. George H. Lee, Chief
Chicago Patent Group
U.S. Atomic Energy Commission
Chicago Operations Office
9800 South Cass Avenue
Argonne, Illinois 60439

NASA TECH BRIEF

NASA Tech Briefs are issued to summarize specific innovations derived from the U.S. space program, to encourage their commercial application. Copies are available to the public at 15 cents each from the Clearinghouse for Federal Scientific and Technical Information, Springfield, Virginia 22151.

Integrator Can Easily Be Set and Reset with an Electronic Switch

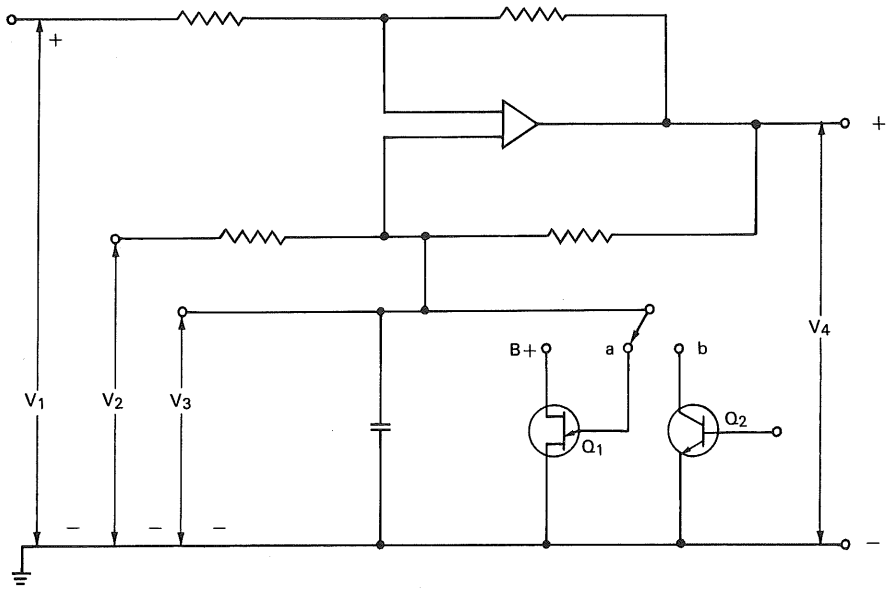

The problem:

To design an integrator circuit that can easily be set and reset to some initial condition using an electronic switch. A conventional integrator uses an operational amplifier with negative feedback applied from the output terminal to the inverting input via a capacitor. It is frequently desirable to use an electronic switch to set and reset the capacitor to some initial condition, and this is made difficult because the capacitor is floating.

The solution:

An integrating circuit that uses a single grounded capacitor, four equal resistors, and an operational amplifier.

How it's done:

With high quality operational amplifiers the integrator circuit shown will work well with resistor values from a few kilohms to many megohms, and with capacitors from a few hundred picofarads to hundreds of microfarads. Component tolerance depends on the accuracy desired. In general, the design philosophy and component selection has been to minimize error introduced by deviation from the idealized circuit. The capacitor leakage should be low, the amplifier should have high open-loop gain, high input impedance and low output impedance. The input voltage and current offsets should be low, and thermally stable. The resistor value selected should not be too low because of reduction of the circuit's input

(continued overleaf)

This document was prepared under the sponsorship of the National Aeronautics and Space Administration. Neither the United States Government nor any person acting on behalf of the United States Government assumes any liability resulting from the use of the information contained in this document, or warrants that such use will be free from privately owned rights.

impedance. Neither should it be too high because of offsets due to leakage current.

Notes:

1. An integrator was constructed at Ames Research Center and used as a linear ramp generator in a ratemeter circuit. It utilized the following component values:

R	= 10,000 ohms
C	= 1 microfarad
power	= ±15 volts
Q_1	= 2N2 646
Q_2	= 2N3 565

2. Inquiries concerning this invention may be directed to:

   Technology Utilization Officer
   Ames Research Center
   Moffett Field, California 94035
   Reference: B67-10135

Patent status:

Inquiries about obtaining rights for the commercial use of this invention may be made to NASA, Code GP, Washington, D.C. 20546.

Source: Gordon J. Deboo
(ARC-10002)

NASA TECH BRIEF

NASA Tech Briefs are issued to summarize specific innovations derived from the U.S. space program, to encourage their commercial application. Copies are available to the public at 15 cents each from the Clearinghouse for Federal Scientific and Technical Information, Springfield, Virginia 22151.

Computer Program Calculates Monotonic Maximum Likelihood Estimates Using Method of Reversals

The problem:

To devise a method for rapidly calculating the maximum likelihood estimates of a monotonic nondecreasing response function. The method must apply to the analysis of univariate or multivariate sensitivity experiments. In univariate sensitivity experiments, the threshold at which an increase in stimulus produces a measured response has an assumed monotonicity. That is, with increasing stimulus, the probability of a response is at least nondecreasing. Commonly used methods for the design and analysis of such experiments use the binomial distribution as a model for analyzing the data generated at a particular stimulus level. However, if these estimates exhibit a "reversal" (response decreases with increasing stimulus) then a procedure is necessary for "correcting" the estimates so that they conform to the monotonicity assumption. To avoid tedious and time consuming study of the response and individually replacing estimates which are nondecreasing, it is desired to find initially the estimates with maximum likelihood properties within the framework of monotonicity.

The solution:

A Fortran II computer program for the complete ordering of sensitivity response probabilities by using an algorithm called the method of reversals.

How it's done:

Univariate response probabilities are completely or linearly ordered, and the estimates can be found by the method of reversals. Multivariate response probabilities are only partially ordered, and a second, more complicated algorithm, based on the known partial ordering, is given to find a complete ordering. The method of reversals may then be applied as in the univariate case. The multivariate response estimates are at a maximum likelihood under the initial assumption that the sensitivity parameters are monotone nondecreasing in each stress variable. However, a complete ordering resulting from the application of the second algorithm need not be unique. Any ordering arrived at through the second algorithm will give identical estimates, which are at a maximum of the likelihood function, when the method of reversals is subsequently applied.

Notes:

1. Available information concerning this program includes the mathematical analysis of the basic theory, a program flowchart, and a complete listing of the computer program.
2. Inquiries concerning this innovation may be directed to:

   COSMIC
   Computer Center
   The University of Georgia
   Athens, Georgia 30601
   Reference: B67-10136

Patent status:

No patent action is contemplated by NASA.

Source: M. J. Alexander
of North American Aviation, Inc.
under contract to
Marshall Space Flight Center
(M-FS-1516)

Category 01

This document was prepared under the sponsorship of the National Aeronautics and Space Administration. Neither the United States Government nor any person acting on behalf of the United States Government assumes any liability resulting from the use of the information contained in this document, or warrants that such use will be free from privately owned rights.

NASA TECH BRIEF

NASA Tech Briefs are issued to summarize specific innovations derived from the U.S. space program, to encourage their commercial application. Copies are available to the public at 15 cents each from the Clearinghouse for Federal Scientific and Technical Information, Springfield, Virginia 22151.

Variable Reluctance Switch Avoids Contact Corrosion and Contact Bounce

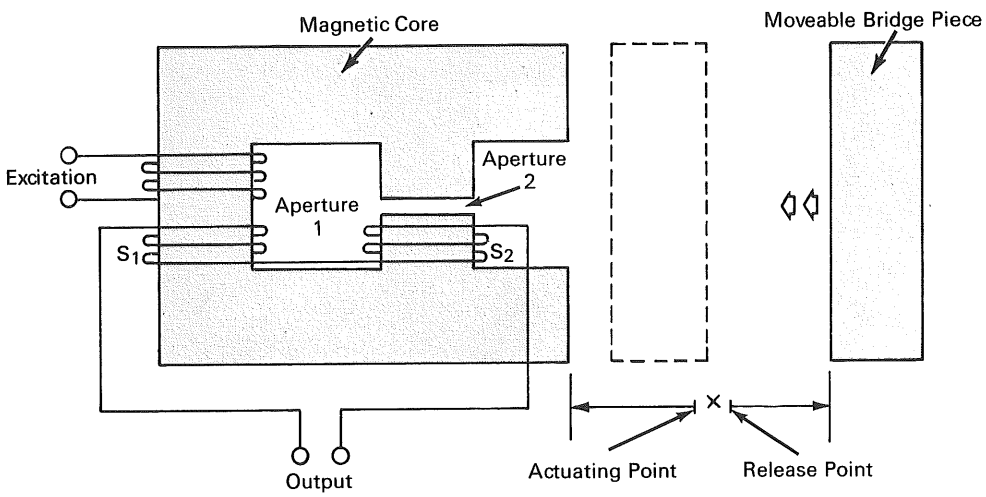

The problem:

Metallic contact switches are subject to contact corrosion when used for protracted periods in a hostile environment such as outer space. Additionally, these switches experience "contact bounce" when switched from one state to the other. These vibrations, although measured in microseconds, could be falsely sensed by critical, high speed circuitry as changes in state.

The solution:

A variable reluctance switch consisting of a wire-wound magnetic core and moveable bridge piece that alters the core flux pattern to produce an electrical output useful for switching control media.

How it's done:

With the moveable bridge piece located at a distance X from the magnetic core, the reluctance between core and bridge prevents formation of a flux path about the opening of aperture 2. Thus, the continuous excitation of the magnetic core primary winding creates a flux path around aperture 1 to induce equal voltages on secondary windings S_1 and S_2. Since the secondaries are wound in opposite directions, the equal voltages are opposite in polarity and cancel so that no potential is produced at the output terminals. When the bridge piece is advanced to a point close to the core, the reluctance is sufficiently reduced to produce a flux path about the open end of aperture 2. This effectively reduces the voltage induced across S_2 by the primary excitation and a voltage imbalance occurs between S_1 and S_2. This voltage imbalance results in a potential at the output terminals with a polarity determined by the selected winding of S_1 and S_2. As this potential reaches a preselected level (as when the bridge piece passes through the actuating point), the element being controlled by the output terminals is activated. As the bridge piece is retracted, its passage of the release

(continued overleaf)

This document was prepared under the sponsorship of the National Aeronautics and Space Administration. Neither the United States Government nor any person acting on behalf of the United States Government assumes any liability resulting from the use of the information contained in this document, or warrants that such use will be free from privately owned rights.

point collapses the flux path, cancelling voltage balance is restored between S_1 and S_2, and the element being controlled by the output terminals is deactivated.

Notes:

1. This device lends itself to protective coatings that would render it corrosion proof while its operation remained unaffected.
2. Such a device could be used to operate bistable elements such as flip flop circuits or to drive relays or solenoids to control appreciable loads.
3. Inquiries concerning this invention may be directed to:

   Technology Utilization Officer
   Manned Spacecraft Center
   Houston, Texas 77058
   Reference: B67-10137

Patent status:

Inquiries about obtaining rights for the commercial use of this invention may be made to NASA, Code GP, Washington, D.C. 20546.

Source: Paul C. Watson
of Massachusetts Institute of Technology
under contract to
Manned Spacecraft Center
(MSC-1178)

NASA TECH BRIEF

NASA Tech Briefs are issued to summarize specific innovations derived from the U.S. space program, to encourage their commercial application. Copies are available to the public at 15 cents each from the Clearinghouse for Federal Scientific and Technical Information, Springfield, Virginia 22151.

Recording and Time Expansion Technique for High-Speed, Single-Shot Transient Video Signal

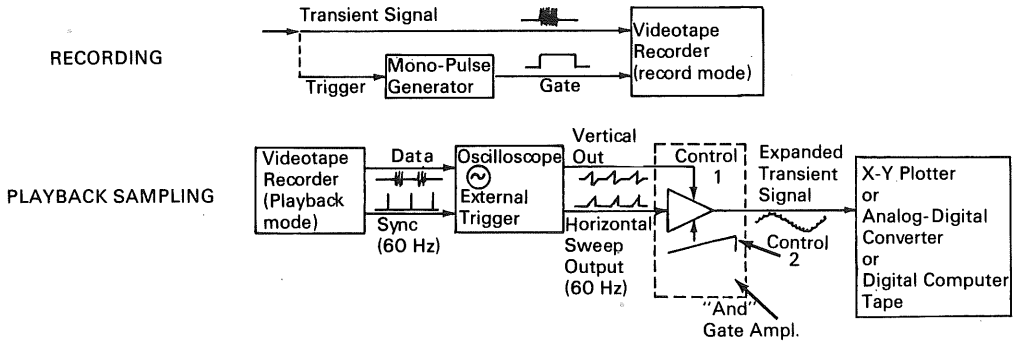

SAMPLING TECHNIQUE

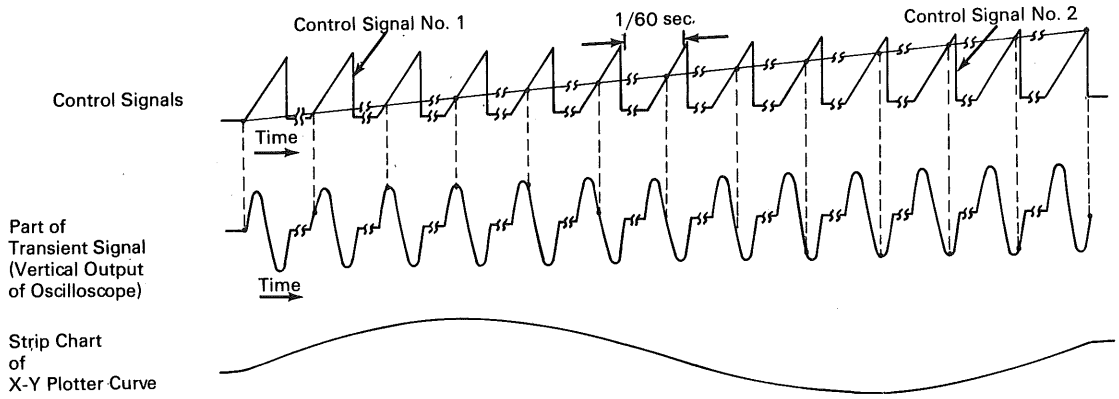

The problem:

To record a high-speed, single-shot, transient voltage which lasts several milliseconds and has a 3 MHz information bandwidth. This recording must be printed on an x–y recorder or rerecorded on a digital computer tape for data processing.

The solution:

Record the transient signal on a modified commercial video tape recorder operating in a single-frame (stop-motion) record mode. When operated in the playback mode, the video tape recorder converts the single transient signal to a repetitive signal in

(continued overleaf)

This document was prepared under the sponsorship of the National Aeronautics and Space Administration. Neither the United States Government nor any person acting on behalf of the United States Government assumes any liability resulting from the use of the information contained in this document, or warrants that such use will be free from privately owned rights.

which the original transient is repeated each time the tape heads make one revolution. This repeating signal is used to drive a sample data translator whose function is to slowly produce the original transient in an interval of time (10,000 times or more, longer than the original transient duration) suitable for an x–y plotter or a computer tape recorder.

How it's done:

Commercially available video tape recorders achieve a 3.5 MHz bandwidth by wrapping a slowly-moving magnetic tape in helical fashion around a high-speed, rotating disk containing the video record-playback heads. The video signal is thus recorded in a slanted stripe pattern on the tape. Single-frame (stop-action) playback is achieved by stopping the tape, thus allowing the rotating video heads to scan repetitively over the same tape stripe. Simple modifications permit the recorder to function as a continuous closed-loop recorder with loop lengths of 1/60 second. With the recorder set to operate in the stop-frame playback mode, a single positive square gate pulse slightly less than 1/60 second long, is applied to the video record amplifier to switch the video heads into the record mode. This gate pulse is initiated by either the start of the transient signal itself or by a trigger pulse preceding the transient signal. While the gate pulse is present, the transient signal is recorded on one stripe of the magnetic tape. When the gate pulse ends, the heads revert to the playback mode and the recorded transient signal is played back repetitively 60 times per second.

As shown in the diagram, the playback transient signal is applied to the vertical channel of an oscilloscope whose horizontal sweep is synchronized to the signal via a 60 Hz pulse available from the video tape recorder during playback.

The translation of the transient signal from the video recorder to the strip chart form is accomplished using a simplified sampling technique. The synchronous-sawtooth-horizontal deflection voltage from the oscilloscope is applied to control input 1 of an "AND"-gate amplifier. Another triggered sawtooth voltage of equal amplitude, but with a period hundreds of times longer, is applied to control input 2. The transient signal is connected from the "vertical-output" connector on the oscilloscope chassis to the input of the "AND"-gate amplifier. Whenever the two control signals are of equal amplitude, the transient signal will be coupled through the "AND"-gate amplifier to a strip chart, x–y plotter, or an analog–digital converter.

Since the oscilloscope sweep will be triggered 60 times per second, the transient signal will be sampled at a similar rate. The number of times the transient signal is sampled will depend upon the ratio of the periods of the two sawtooth signals as shown in the diagram. Great time base expansion and resolution of the transient signal may be obtained by using the oscilloscope's delayed-sweep feature and fast rates to display only selected small portions of the entire transient signal on the oscilloscope. Breaking this complete transient translation into a family of sequential frames also eliminates the accumulated jitter.

Notes:

1. Circuit modifications have been designed for Ampex and Sony video recorders to adapt them to this technique. Diagrams for the Sony circuit alterations are available.
2. Inquiries concerning this invention may be directed to:

   Technology Utilization Officer
   Ames Research Center
   Moffett Field, California 94035
   Reference: B67-10139

Patent status:

Inquiries about obtaining rights for the commercial use of this invention may be made to NASA, Code GP, Washington, D.C. 20546.

Source: R. C. Sander and R. J. Hruby
(ARC-10003)

NASA TECH BRIEF

NASA Tech Briefs are issued to summarize specific innovations derived from the U.S. space program, to encourage their commercial application. Copies are available to the public at 15 cents each from the Clearinghouse for Federal Scientific and Technical Information, Springfield, Virginia 22151.

Clamp Provides Efficient Connection for High-Density Currents

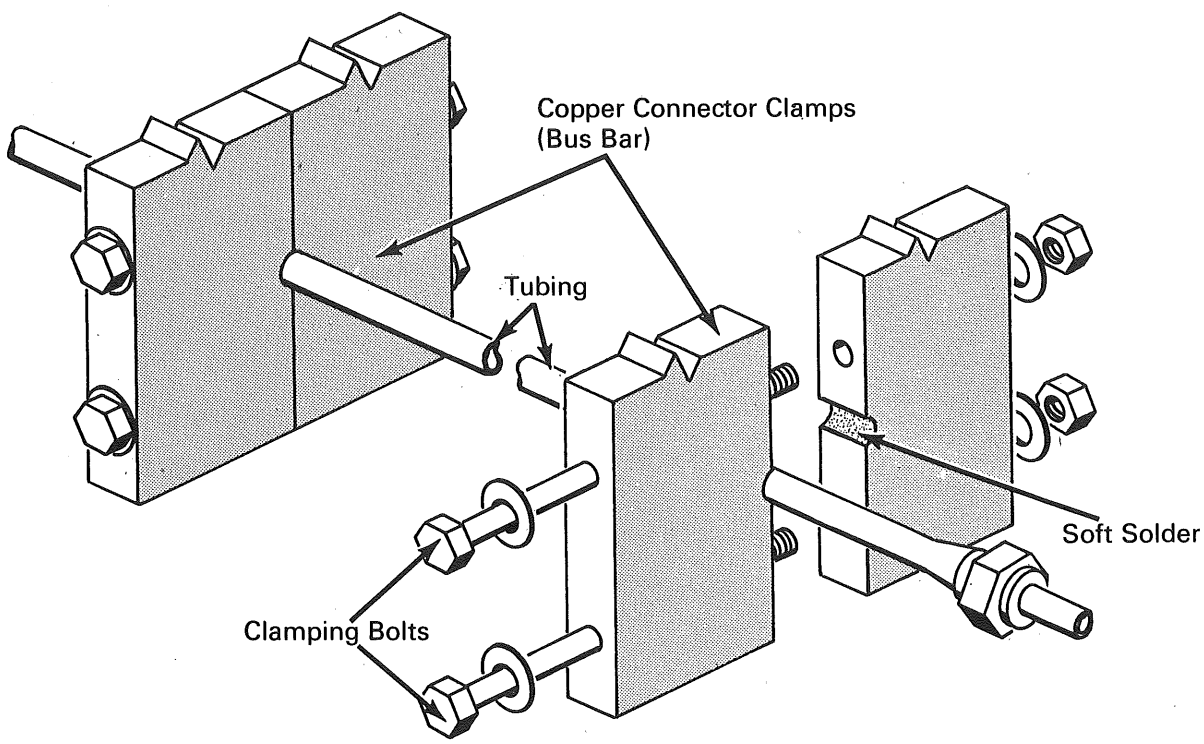

The problem:

To investigate very high heat transfer rates, it was necessary to provide 7000 amperes of current to a section of 0.250-inch o.d. × 0.020-inch wall, type 347 stainless steel tubing, containing hydrogen gas at 1500 psi pressure. Fusion-bonded (welded or brazed) electrical connections could not be used because of the degradation of the physical properties of the stainless steel specimen. Ordinary clamped connections were subject to high resistance problems and capacitative arcing across minor surface imperfections.

The solution:

An electrical connector clamp (bus bar) that provides essentially 100 percent contact-surface efficiency through the use of a cold-flowed lead solder film between the faying surfaces of the clamp and tubing. The film provides the electrical equivalent of a fusion bond without significantly degrading the grain structure of the materials, and permits disassembly and reuse of the components.

How it's done:

The clamps are fabricated from 0.5-inch copper plate to fit the tubing, with 0.002-inch diametral inter-

(continued overleaf)

This document was prepared under the sponsorship of the National Aeronautics and Space Administration. Neither the United States Government nor any person acting on behalf of the United States Government assumes any liability resulting from the use of the information contained in this document, or warrants that such use will be free from privately owned rights.

ference. The faying surfaces in the clamp bore are flash tinned with soft solder, resulting in a coating of approximately 0.001-inch thickness. After the tubing is inserted, tightening of the clamping bolts against this total of 0.004-inch diametral interference forces cold flow of the soft solder, which completely fills all interfacial voids at the faying surfaces.

Notes:

1. Although there is limited industrial requirement for current densities of this magnitude (17,500 amperes per square inch), significant benefits in reduced power losses and contact surface protection can be realized at the lower current densities used in such processes as electroplating, electric resistance welding, and electrochemical machining.
2. Inquiries concerning this invention may be directed to:

   Technology Utilization Officer
   Marshall Space Flight Center
   Huntsville, Alabama 35812
   Reference: B67-10140

Patent status:

Inquiries about obtaining rights for the commercial use of this invention may be made to NASA, Code GP, Washington, D.C. 20546.

Source: D. M. Trebes and J. R. McCarthy
of North American Aviation, Inc.
under contract to
Marshall Space Flight Center
(M-FS-2417)

NASA TECH BRIEF

NASA Tech Briefs are issued to summarize specific innovations derived from the U.S. space program, to encourage their commercial application. Copies are available to the public at 15 cents each from the Clearinghouse for Federal Scientific and Technical Information, Springfield, Virginia 22151.

Thin Film Process Forms Effective Electrical Contacts on Semiconductor Crystals

A process has been developed for making microscopic, low-resistance electrical contacts on hexagonal n-type silicon carbide crystals. These crystals are to be used for microelectronic devices and the contacts must be of precise geometry. The process involves vacuum deposition of a 10,000 angstrom layer of aluminum over the entire surface of the crystal, followed by selective etching of the aluminum (using a photoresist mask) to expose the bare silicon carbide in the areas where the electrical contacts are to be formed. Alternating layers of tantalum and gold are then deposited by sputtering to form a 3000 angstrom alloy film (14 percent tantalum–86 percent gold) over the aluminum layer and the bare contact areas on the crystal. Following these steps, the crystal is treated with an appropriate etchant (either a strong acid or a strong base), which dissolves the intermetallics formed with the aluminum mask, leaving the tantalum–gold interdeposited film intact.

Notes:

1. The tantalum–gold low-resistance contacts formed as outlined above are mechanically rugged and chemically stable. They were not affected in devices operated at temperatures of 500°C in an oxidizing atmosphere.
2. Gold lead wires are easily and firmly attached to the contacts by the conventional thermocompression bonding process.
3. Inquiries concerning this innovation may be directed to:

   Technology Utilization Officer
   Marshall Space Flight Center
   Huntsville, Alabama 35812
   Reference: B67-10142

Patent status:

No patent action is contemplated by NASA.

Source: N. P. Formigoni and J. S. Roberts
of Westinghouse Electric Corporation
under contract to
Marshall Space Flight Center
(M-FS-2343)

Category 01

This document was prepared under the sponsorship of the National Aeronautics and Space Administration. Neither the United States Government nor any person acting on behalf of the United States Government assumes any liability resulting from the use of the information contained in this document, or warrants that such use will be free from privately owned rights.

NASA TECH BRIEF

NASA Tech Briefs are issued to summarize specific innovations derived from the U.S. space program, to encourage their commercial application. Copies are available to the public at 15 cents each from the Clearinghouse for Federal Scientific and Technical Information, Springfield, Virginia 22151.

Design Concepts Using Ring Lasers for Frequency Stabilization

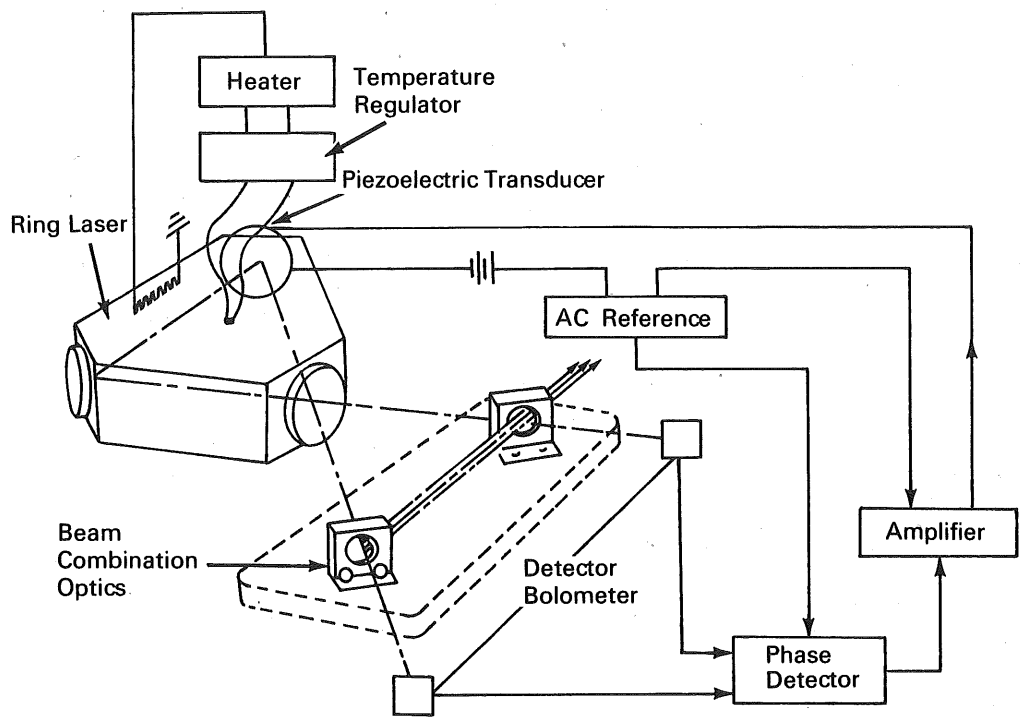

STABILIZED RING LASER USING PIEZOELECTRIC DITHER

Design concepts for laser frequency stabilization were evolved on the basis of theoretical and experimental work done in connection with a CO_2 laser research program. Several stabilization concepts were formulated and are described below. Each method is based on a frequency discriminant which generates an unambiguous deviation signal that can be used for automatic stabilization. Closed-loop control is used to stabilize cavity length at a null point which corresponds to the desired laser operating frequency.

The approaches described here are:

(1) *Systems with a stabilized ring laser.* These systems have a frequency dithered ring laser as a stable element. Dithering is done either by a piezoelectric element or by a gain dither obtained through a discharge current dither. The frequency dither in the ring laser can be filtered from the system output by slaving a linear laser to the stabilized ring laser.

(continued overleaf)

This document was prepared under the sponsorship of the National Aeronautics and Space Administration. Neither the United States Government nor any person acting on behalf of the United States Government assumes any liability resulting from the use of the information contained in this document, or warrants that such use will be free from privately owned rights.

(2) *Systems with a Doppler gain tube.* The gain tube is the reference for frequency deviations and a linear laser is locked to the frequency discriminant of the flow modulation.

These systems are described in greater detail below.

PIEZOELECTRICALLY DITHERED RING LASER

Stabilization using a ring laser depends on the clockwise (cw) and counterclockwise (ccw) beam competition resulting in a sharp switching action on beam intensity. This switching point occurs at a unique frequency and can be used as a frequency deviation reference.

The stabilization concept using a ring laser is shown above. The ring laser is dithered in frequency by applying a constant amplitude sinusoidal voltage to a piezoelectric element driving one mirror, and, thereby changing cavity length. The intensity modulated beam produces an ac signal at the detector output. The duty cycle (i.e., on–off time) of this signal varies with the laser operating point.

The control signal is derived from a phase sensitive demodulator which has as a reference the ac dither voltage. After amplification, the "dc" cavity stabilization signal is applied to the piezoelectric transducer to correct the cavity length. Operating as a null seeking system, the stabilization loop cancels out thermal and other disturbances occurring within its dynamic response capabilities. The stabilized output beam is obtained by combining both the cw and ccw beams of the laser.

FREQUENCY STABILIZATION USING DOPPLER GAIN TUBE

Frequency stabilization using a Doppler gain tube has the advantage that the modulation for purposes of frequency control can be done external to the laser, with negligible optical coupling back to the laser, itself. This approach (illustrated below) uses the gain modulation effect associated with the direction of gas flow in the gain tube to obtain a frequency discriminant. The gain modulation depth, and also phase (referred to the flow modulation frequency), depends on the laser operating point relative to the gain versus frequency profile in the Doppler gain tube.

To achieve stabilization, a portion of the output of the linear laser is directed into the gain tube. In the tube the flow of gas is modulated by solenoid valves to give a cyclic flow velocity $\pm v$ in the discharge. Upon passing through the gain tube, the laser radiation is modulated to a depth which depends on the laser operating point in frequency and the direction of gas flow. The signal from the thermistor bolometer is an ac voltage at the frequency of the flow modulation. Demodulation takes place in a phase sensitive demodulator operating with a reference derived from the solenoid valve modulation voltage. The amplified output of the demodulator is applied to the linear laser cavity to correct the length either to the piezoelectric element and/or to the heater.

Note:

Inquiries concerning this invention may be directed to:

Technology Utilization Officer
Marshall Space Flight Center
Huntsville, Alabama 35812
Reference: B67-10143

Patent status:

Inquiries about obtaining rights for the commercial use of this invention may be made to NASA, Code GP, Washington, D.C. 20546.

Source: H. Mocker
of Honeywell Inc.
under contract to
Marshall Space Flight Center
(M-FS-2448)

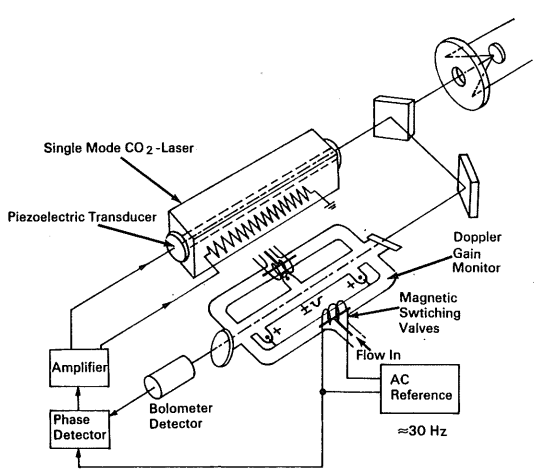

FREQUENCY STABILIZED LINEAR LASER USING DOPPLER GAIN TUBE

NASA TECH BRIEF

NASA Tech Briefs are issued to summarize specific innovations derived from the U.S. space program, to encourage their commercial application. Copies are available to the public at 15 cents each from the Clearinghouse for Federal Scientific and Technical Information, Springfield, Virginia 22151.

Process Facilitates Photoresist Mask Alignment on SiC Crystals

The problem:

Ensuring proper orientation of photoresist masks on silicon carbide crystals used in the fabrication of semiconductor devices, such as field effect transistors. In order to apply the photoresist masks it is necessary to delineate the p and n junctions which intersect the surface of the crystal. At both low and high impurity concentrations in a silicon carbide crystal of less than 1 mil in thickness, the p and n regions on a planar surface cannot be distinguished from one another by the human eye.

The solution:

The growth of silicon dioxide on a silicon carbide crystal by heating in a water vapor-saturated gas (e.g., oxygen or argon) at 1170° to 1175°C will sharply delineate p,n junctions which intersect the surface of the crystal. The delineation is manifested by the appearance of a different color over the p region from that over the n region, the colors being dependent on the duration of the oxidation process. The color difference is caused by the well-known optical interference phenomenon associated with thin films. The oxide apparently grows at different rates on p-type and n-type materials, respectively.

How it's done:

After the normal diffusion procedure is completed, the crystal is lapped to planarity and steam-oxidized for 45 minutes at 1170° to 1175°C. This process yields an oxide layer, approximately 3000 angstroms thick, which exhibits a sharply delineated blue-gold color contrast between the n-type and p-type regions. The contrast is most pronounced in yellow light, and subsequent alignment of photoresist masks is best performed under this illumination.

Note:

Inquiries concerning this innovation may be directed to:

Technology Utilization Officer
Marshall Space Flight Center
Huntsville, Alabama 35812
Reference: B67-10144

Patent status:

No patent action is contemplated by NASA.

Source: N. P. Formigoni and J. S. Roberts
of Westinghouse Electric Corporation
under contract to
Marshall Space Flight Center
(M-FS-2394)

Category 01

This document was prepared under the sponsorship of the National Aeronautics and Space Administration. Neither the United States Government nor any person acting on behalf of the United States Government assumes any liability resulting from the use of the information contained in this document, or warrants that such use will be free from privately owned rights.

NASA TECH BRIEF

NASA Tech Briefs are issued to summarize specific innovations derived from the U.S. space program, to encourage their commercial application. Copies are available to the public at 15 cents each from the Clearinghouse for Federal Scientific and Technical Information, Springfield, Virginia 22151.

Test Instrumentation Evaluates Electrostatic Hazards in Fluid System

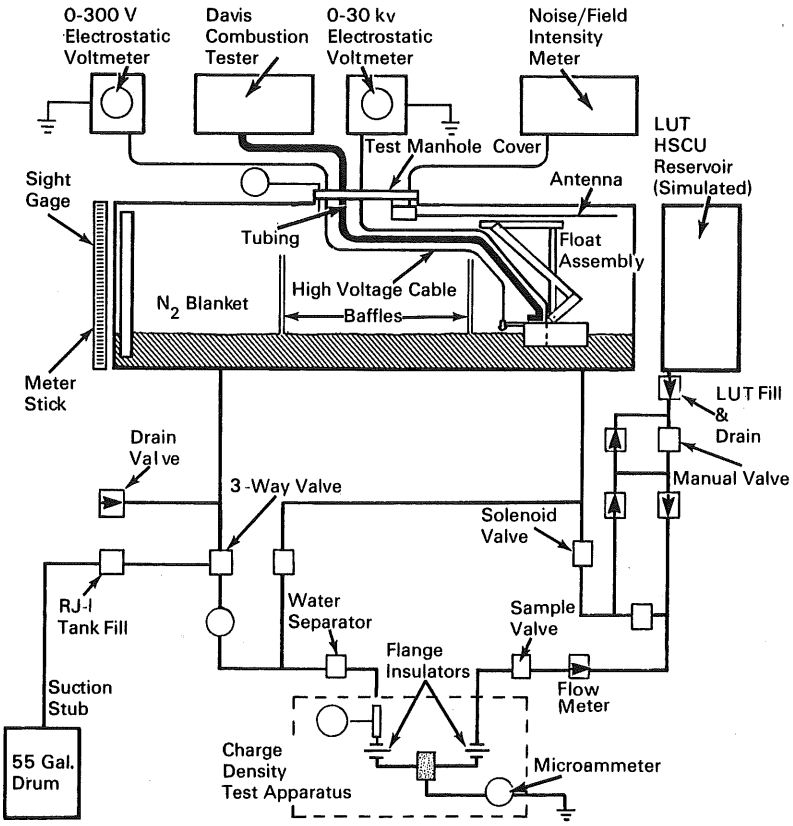

The problem:

To determine the degree of hazard originating from a static electricity buildup in RJ-1 hydraulic fluid during normal operation of the RJ-1 and Sodium Nitrite Services Truck. It is also desired to determine testing details that will be required during any subsequent RJ-1 static charge tests.

Static electricity generation during handling of hazardous hydrocarbon fuels has resulted in numerous explosions, attributed to electrostatic charge generation in equipment such as aircraft fuel tanks, tanker compartments, blending tanks, and storage tanks. These explosions have occurred in various climatic conditions and geographical areas. A large proportion

(continued overleaf)

This document was prepared under the sponsorship of the National Aeronautics and Space Administration. Neither the United States Government nor any person acting on behalf of the United States Government assumes any liability resulting from the use of the information contained in this document, or warrants that such use will be free from privately owned rights.

of accidents have resulted with fuels such as JP-4 which form flammable vapor–air mixtures at ambient temperatures. Many of the accidents have been attributed to electrical discharges which occurred in the tank ullage, causing ignition of the vapor–air mixture present. RJ-1 fuel is to be used as a hydraulic fluid for test and checkout of the S-IC booster stage.

The solution:

Measure the RJ-1 surface potential with a probe mounted on a float in contact with the fluid surface. The probe is connected to an electrostatic voltmeter with a high voltage cable that passes through the RJ-1 tank manhole cover.

How it's done:

Electrical discharges from the fluid are sensed in the tank ullage with a dipole antenna and measured with a noise/field intensity meter. Simultaneous monitoring of the fluid level, fluid potential, and electrical discharges provide data relating arcing to field strengths in the ullage space. The measurements taken during tank fill from 55 gallon drums are correlated with the liquid level in the RJ-1 tank to provide an indication of the most hazardous phase of the filling operation.

Measurements of filter current and tank potential recorded during circulation provide data on the potential buildup in the tank. The relative contributions to the total potential by the charging effect of the individual components, i.e., electrically insulated filter, water separator, and other plumbing, are determined.

The potential relaxation monitored after a given potential is obtained in the RJ-1 tank provides a measure of the rest period necessary to dissipate the RJ-1 tank charge through ohmic discharge to the tank walls.

Note:

Inquiries concerning this innovation may be directed to:

Technology Utilization Officer
Marshall Space Flight Center
Huntsville, Alabama 35812
Reference: B67-10145

Patent status:

No patent action is contemplated by NASA.

Source: L. H. Collins, D. Krebs, and R. Henry
of The Boeing Company
under contract to
Marshall Space Flight Center
(M-FS-2277)

NASA TECH BRIEF

NASA Tech Briefs are issued to summarize specific innovations derived from the U.S. space program, to encourage their commercial application. Copies are available to the public at 15 cents each from the Clearinghouse for Federal Scientific and Technical Information, Springfield, Virginia 22151.

Hydrogen Maser as a Highly Stable Frequency Reference

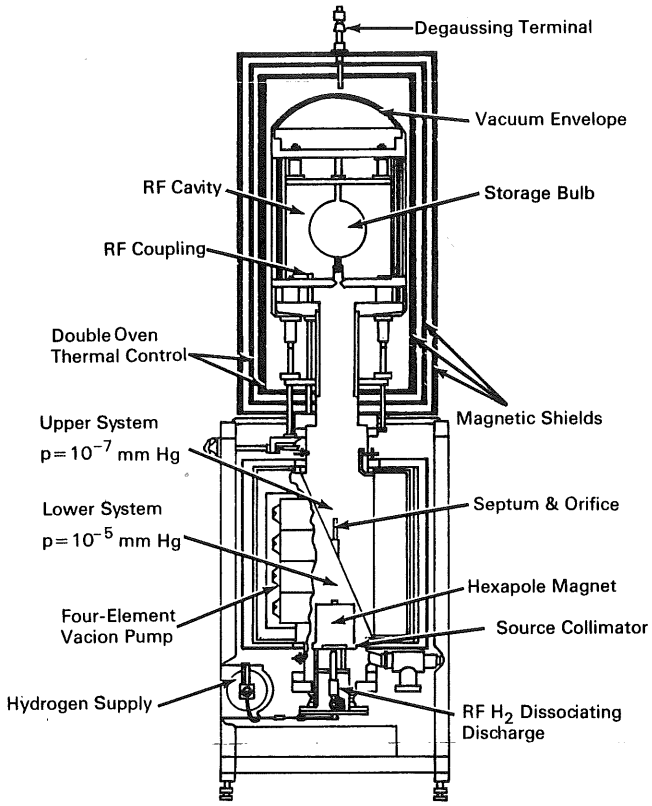

Tracking, communication, and guidance requirements for the launch, earth orbital, and deep space phases of a mission often demand frequency sources having a very high order of short- and long-term frequency stability, as well as a high degree of intrinsic reproducibility. In 1961, NASA's Manned Space Flight Center began a search for such a frequency source and found that the hydrogen maser, invented by Dr. Norman Ramsey of Harvard University, showed excellent promise of providing the desired characteristics. A research and development project was therefore begun under contract to improve the basic hydrogen maser for use as a highly stable frequency reference for precision tracking systems.

The hydrogen maser illustrated in the schematic diagram represents the first step in achieving an overall reduction in size. This unit is 56 centimeters square at the base, 200 centimeters high, and weighs approximately 360 kilograms.

The short- and long-term frequency stability and the resettability, expressed as the rms deviation from the mean, for the maser, which has a nominal resonance

(continued overleaf)

This document was prepared under the sponsorship of the National Aeronautics and Space Administration. Neither the United States Government nor any person acting on behalf of the United States Government assumes any liability resulting from the use of the information contained in this document, or warrants that such use will be free from privately owned rights.

frequency of 1420.405751 MHz, is listed below:

1 second	5×10^{-13}
1 minute	6×10^{-14}
1 hour	3×10^{-14}
1 day	2×10^{-14}
1 month	3×10^{-13}
Resettability	$\pm5\times10^{-13}$

A program is underway to reduce the size of the unit to approximately a half. Investigations are being carried out with a spherical quartz dielectric cavity. This cavity is considerably smaller than the cylindrical cavity now used and would allow a substantial reduction in the size of the magnetic and thermal shields.

Notes:

1. Because of its excellent short- and long-term frequency stability, the hydrogen maser would be useful for laboratory time-frequency measurements and spectroscopy, as well as a ground-based frequency reference for precision tracking systems. In space it could be used in geodetic research, navigation, time distribution, and in important physical measurements such as on the relativistic gravitational red shift.
2. Inquiries concerning this innovation may be directed to:

   Technology Utilization Officer
   Marshall Space Flight Center
   Huntsville, Alabama 35812
   Reference: B67-10146

Patent status:

No patent action is contemplated by NASA.

Source: Robert Vessot and Jacques Vanier
of Varian Associates
under contract to
Marshall Space Flight Center
(M-FS-2437)

NASA TECH BRIEF

NASA Tech Briefs are issued to summarize specific innovations derived from the U.S. space program, to encourage their commercial application. Copies are available to the public at 15 cents each from the Clearinghouse for Federal Scientific and Technical Information, Springfield, Virginia 22151.

Means for Improving Apparent Resolution of Television

A means is described that improves the apparent resolution of television video presentations. The technique depends on the short term temporal integration characteristics of the observer's visual system and involves a minimum of electronics.

Observing a single frame of motion picture film under a microscope reveals surprisingly poor detail compared with the effect achieved when the picture is projected at normal frame rates with professional equipment. A portion of this apparent difference results from the random grain structure in the film emulsion, and the moving picture viewer uses the different information on succeeding frames to piece together the most probable picture content. Considering the TV raster as "grain", existing standards dictate that the raster appear in the same position on each successive frame and this does not yield the same effect as that produced by motion picture film. To achieve the desired effect with TV, it is necessary to change the phase relationship between horizontal and vertical oscillators at the start of each frame and maintain this precise relationship throughout both fields of the frame. Change is made to a new phase relationship at the start of each succeeding frame and maintained throughout the frame at both camera and monitor in order to maintain the correct positional relationships of imagery.

The technique involved here serves to displace the raster by a discrete fraction of the width of a raster line on each succeeding frame so that the eye can perform a temporal integration of the different information in the different raster "grain". This phase shift is accomplished by using a suitable switching time delay in one of the oscillators.

The vertical drive pulse train from the sync generator is first formed into a group of pulse trains and fed into a switching time delay that passes one pulse train and delays the next by a preselected discrete time. The trains are then broken into pulse pairs, each of which retains the basic (63,492 μsec) timing between the leading edge of the first pulse of the pair and the leading edge of the second pulse. This timing relationship causes consecutive fields to interlace in their formation of a frame. The pulse pairs are then recombined into a pulse train that has the desired inter-pulse-pair timing. This causes the frames to be shifted with respect to one another and to become interlaced. The recombined pulse train is now split into two trains, one fed to a monostable that shapes the pulses for the camera vertical oscillator and the other fed to a monostable for final shaping at the monitor vertical oscillator.

Notes:

1. This technique could have application wherever high resolution is required as in TV monitoring of the fine detail of surgical operations.
2. Inquiries concerning this invention may be directed to:

   Technology Utilization Officer
   Electronics Research Center
   575 Technology Square
   Cambridge, Massachusetts 02139
   Reference: B67-10152

Patent status:

Inquiries about obtaining rights for the commercial use of this invention may be made to NASA, Code GP, Washington, D.C. 20546.

Source: Edwin H. Hilborn
(ERC-65)

Category 01

This document was prepared under the sponsorship of the National Aeronautics and Space Administration. Neither the United States Government nor any person acting on behalf of the United States Government assumes any liability resulting from the use of the information contained in this document, or warrants that such use will be free from privately owned rights.

NASA TECH BRIEF

NASA Tech Briefs are issued to summarize specific innovations derived from the U.S. space program, to encourage their commercial application. Copies are available to the public at 15 cents each from the Clearinghouse for Federal Scientific and Technical Information, Springfield, Virginia 22151.

Subminiature Deflection Circuit Operates Integrated Sweep Circuits in TV Camera

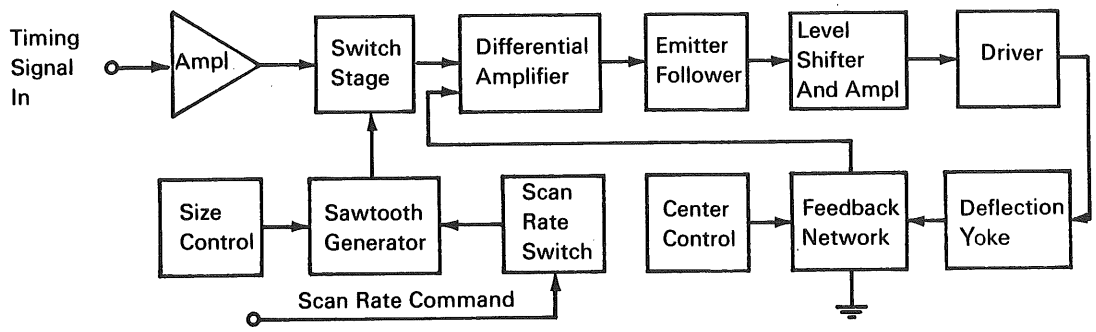

The problem:

The stringent requirements of the Apollo program demand a highly reliable magnetic sweep deflection circuit for the hand-held lunar television camera. It must be small in size, low in power dissipation, and retain a linear and stable output without adjustment throughout an Apollo mission.

The solution:

Sweep deflection circuits that convert timing signals from the synchronizer into waveforms that provide a 1/2- by 3/8-inch raster on the vidicon target. Raster lines are linear within ±1% of total deflection and, after original adjustment, raster size remains constant and linear in the presence of wide voltage and temperature fluctuations.

How it's done:

The circuitry illustrated in the block diagram serves both horizontal and vertical sweep deflection circuits since they are identical except for the rc charging networks and the yoke networks. The first amplifier provides the proper gain and phase of the timing pulse to operate the switch stage that in turn recycles the sawtooth generator. The sawtooth generator, a regular rc charging circuit with a constant current transistor, provides linearity to the sweep. Size control is obtained by variations in the transistor base circuit.

The differential amplifier provides gain and isolation plus mixing of the feedback signal with the reference input. This mixed output, after power amplification in the emitter-follower, is amplified and shifted in level to provide the proper operating point for the complementary emitter follower drivers. These drivers feature high efficiency and can provide either yoke with a signal well in excess of the nominal requirement. Gain and drift stabilization of the output is provided by feedback from a resistor in the load circuit. Centering control is also provided in the feedback network that also reduces the nominal open-loop gain from greater than 200 to less than 2.

Notes:

1. Component volume, excluding the yoke is 1.65 cubic inches; power consumption is less than 0.5 watt; output is linear within ±1%; and size and center settings remain constant within ±5% from −55° to +120°C.

(continued overleaf)

This document was prepared under the sponsorship of the National Aeronautics and Space Administration. Neither the United States Government nor any person acting on behalf of the United States Government assumes any liability resulting from the use of the information contained in this document, or warrants that such use will be free from privately owned rights.

2. The sweeps may be automatically switched to give either a 10 cps, 320 line frame rate or a high resolution 0.625 cps, 1280 line frame rate at the operator's discretion.
3. Inquiries concerning this invention may be directed to:

   Technology Utilization Officer
   Manned Spacecraft Center
   Houston, Texas 77058
   Reference: B67-10155

Patent status:

Inquiries about obtaining rights for the commercial use of this invention may be made to NASA, Code GP, Washington, D.C. 20546.

Source: F. L. Schaff
of Westinghouse Electric Corporation
under contract to
Manned Spacecraft Center
(MSC-1263)

NASA TECH BRIEF

NASA Tech Briefs are issued to summarize specific innovations derived from the U.S. space program, to encourage their commercial application. Copies are available to the public at 15 cents each from the Clearinghouse for Federal Scientific and Technical Information, Springfield, Virginia 22151.

Voltage Regulator/Amplifier Is Self-Regulated

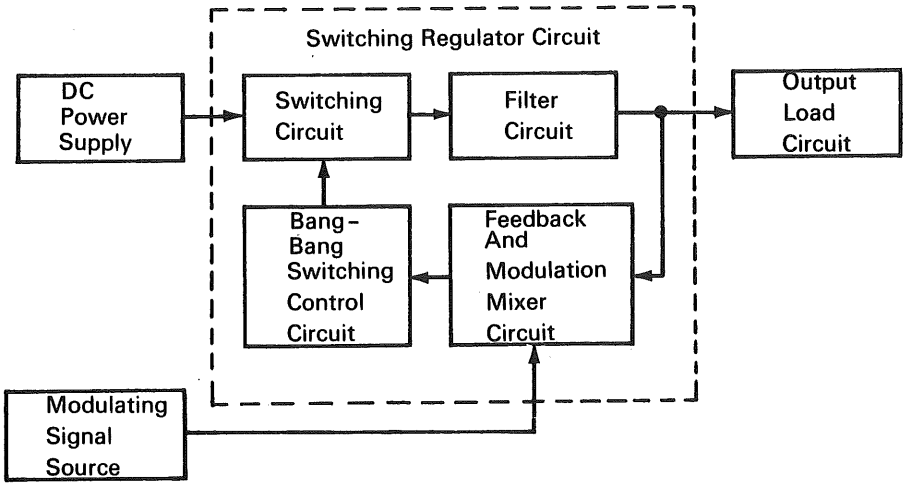

The problem:

In modulated regulator systems, the output B+ voltage must be very closely regulated if input power requirements are to be held to a reasonable level. Loss type dc regulators, for example, while operable in such systems, are quite inefficient, dissipate appreciable power through heat loss, and require a considerable power supply system.

The solution:

A signal modulated, self-regulating voltage regulator/amplifier using self-oscillation with feedback to a control circuit with a discontinuous amplitude action feedback loop. Maximum frequency response is assured plus a substantially continuous regulating action by mixing of the output and input signals in a combining network within the feedback loop.

How it's done:

The switching regulator circuit is powered by a dc supply and modulated by an external rf signal input. The dc supply is connected directly to a switching circuit that is controlled by a "bang-bang" type switching control circuit in the filtered feedback loop that incorporates a feedback and modulation mixer circuit. This latter circuit combines the outputs of the regulator/amplifier circuit and the switching control circuit. A filter circuit converts the output signal to a dc regulating voltage as it is routed through the feedback loop. Operating impedance of the feedback circuit to the dc regulating voltage levels is much higher than output load circuit impedance. This provides the required regulator amplifying action and, in conjunction with high modulating signal input impedance that is matched to the feedback signal impedance, a very large signal amplification. The regulator/amplifier is thus self-regulating with the output both controlled by the input and regulated to it.

Notes:

1. This circuitry provides a relatively large signal power gain; for example, 10 milliwatts of audio can effectively control a 50-watt dc output.

(continued overleaf)

This document was prepared under the sponsorship of the National Aeronautics and Space Administration. Neither the United States Government nor any person acting on behalf of the United States Government assumes any liability resulting from the use of the information contained in this document, or warrants that such use will be free from privately owned rights.

2. Various alternate circuit configurations are possible for obtaining a variety of outputs, all of which will exhibit similar close control and high gain.
3. Inquiries concerning this invention may be directed to:

Technology Utilization Officer
Manned Spacecraft Center
Houston, Texas 77058
Reference: B67-10156

Patent status:

Inquiries about obtaining rights for the commercial use of this invention may be made to NASA, Code GP, Washington, D.C. 20546.

Source: Willis E. Day and Donald E. Phillips
of Collins Radio Company
under contract to
Manned Spacecraft Center
(MSC-1240)

AEC-NASA TECH BRIEF

AEC-NASA Tech Briefs describe innovations resulting from the research and development program of the U.S. AEC or from AEC-NASA interagency efforts. They are issued to encourage commercial application. Tech Briefs are published by NASA and may be purchased, at 15 cents each, from the Clearinghouse for Federal Scientific and Technical Information, Springfield, Virginia 22151.

Calibrating Ultrasonic Test Equipment for Checking Thin Metal Strip Stock

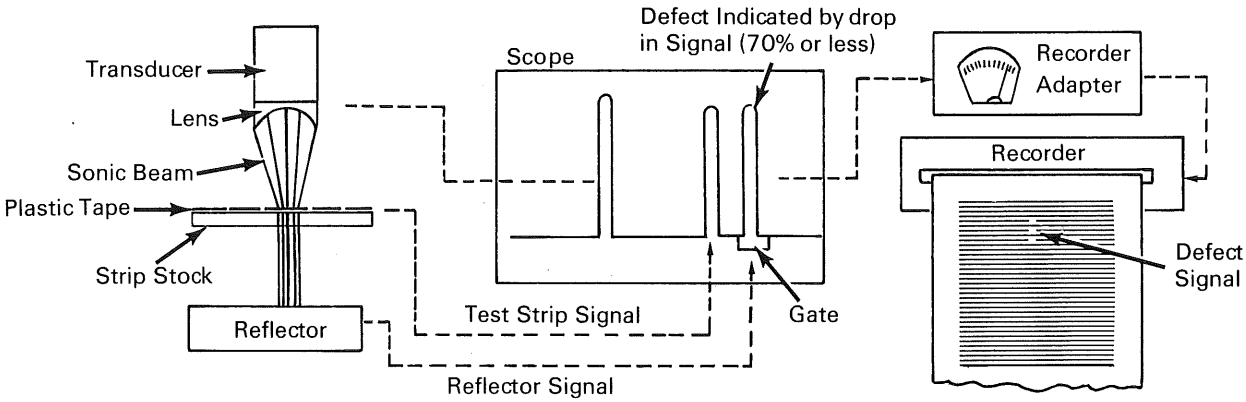

The problem:

It was desired to detect minute laminar-type discontinuities in thin metal strip stock. To ensure valid data from conventional ultrasonic test devices, a positive calibration technique was required that would not damage or destroy the strip stock.

The solution:

Patterns of plastic tape are preselected to include minutely calculated discontinuities and the tape is applied to the strip stock to intercept the incident sonic beam.

How it's done:

A transducer, the tape-treated strip stock, and reflector are immersed in a water bath (not shown) and a pulsed sonic beam is focused to strike the plastic tape atop the thin metal strip stock, pass through the tape and strip stock and impinge on the reflector. At each interface between water and solid material, energy is lost from the incident sonic beam by reflection that is a function of acoustic impedance mismatch at that point. The signal output from the reflector is of principal interest. The gate in the scope is set on the reflector signal and receiver gain is adjusted to provide a 100% amplitude response in the recorder. The recorder adapter is adjusted to provide continuous current to the recorder unless signal amplitude drops below a preselected level. With no discontinuities in the test sample, a dark line appears on the readout. Discontinuities are shown as breaks in the readout lines.

Notes:

1. This technique permits calibration to a sensitivity that senses laminar defects down to 0.0022 square inch in 0.012-inch strip stock.
2. Prior to this innovation, the only methods available for creating simulated discontinuities involved the use of chemical or electrode induced erosion. Both methods were time consuming, difficult to apply, and resulted in destruction of the strip stock.

(continued overleaf)

This document was prepared under the sponsorship of the Atomic Energy Commission and/or the National Aeronautics and Space Administration. Neither the United States Government nor any person acting on behalf of the United States Government assumes any liability resulting from the use of the information contained in this document, or warrants that the use of any information, apparatus, method, or process disclosed in this document may not infringe privately owned rights.

3. Inquiries concerning this innovation may be directed to:

Technology Utilization Officer
AEC–NASA Space Nuclear Propulsion Office
U.S. Atomic Energy Commission
Washington, D.C. 20545
Reference: B67-10127

Patent status:

No patent action is contemplated by AEC or NASA.

Source: R. M. Peterson
of Aerojet-General Corporation
under contract to
Space Nuclear Propulsion Office
(NUC-10009)

NASA TECH BRIEF

NASA Tech Briefs are issued to summarize specific innovations derived from the U.S. space program, to encourage their commercial application. Copies are available to the public at 15 cents each from the Clearinghouse for Federal Scientific and Technical Information, Springfield, Virginia 22151.

Multiplexing Control Device Enables Handling of Wide Variations in Sampling Rates

A telecommunications system, which has been under study in conjunction with the NASA Emplaced Scientific Station (ESS) project, has two basic functions. The first is the task of collecting data from various lunar experiments and transmitting it to the earth. The second is to provide an earth control capability for the activation and adjustment of the various scientific instruments and control of other subsystem operations. Because of the experimental nature of the ESS, a versatile and flexible telecommunications system is required.

The proposed ESS telecommunication system concept provides the ability to change according to needs indicated by the data. Ordinary telemetry systems, such as those used in modern missile and space applications, measure quantities according to a rigid, unchangeable format (measurement sampling sequence). In the case of PCM or other sampled data systems, the frequency and order of sampling each parameter are fixed. This is a suitable technique for many applications, since time is generally not available during the life of the system for evaluating the data to a sufficient degree that changes might be determined. Such an approach is not suitable for the ESS system. The ESS concept will permit changes to the sampling frequencies and format as often as required during the life of the system without any change to the hardware situated on the moon. Based upon a study of the requirements of the planned experiments, it has been determined that the system must measure about 400 data values each second. As a matter of providing a margin and to optimize the flexibility of the system, 480 data measurements per second have been selected as nominal capacity. The system will operate in such a way that any function or parameter can be measured periodically at times corresponding to certain subsets of the possible 480 measurement times. The system will include a magnetic core memory as the data multiplexing control device which will store a set of 480 numbers, called addresses. To each experiment output, or other source of data, there is assigned an address. The memory is initially "loaded" with a set of 480 addresses by use of the earth-to-moon command radio link. The system then automatically sequences the memory to readout, one by one, all 480 addresses in one second. For each address there is a switching device or gate which will connect the corresponding measurement point to the digital data encoder each time its address is produced by the sequencing memory. The encoder samples the measurement value and produces a digital code output corresponding to the measured value. The sequencing through the 480 addresses continues until a new address program is loaded or a command to stop is given.

Notes:

1. Suggested applications for the data multiplexing control device to be included in the ESS are in systems requiring a flexible time division multiplex format for data accumulation and transmission.
2. Inquiries concerning this innovation may be directed to:

   Technology Utilization Officer
   Marshall Space Flight Center
   Huntsville, Alabama 35812
   Reference: B67-10150

(continued overleaf)

This document was prepared under the sponsorship of the National Aeronautics and Space Administration. Neither the United States Government nor any person acting on behalf of the United States Government assumes any liability resulting from the use of the information contained in this document, or warrants that such use will be free from privately owned rights.

Patent status:

No patent action is contemplated by NASA.

Source: Westinghouse Electric Corporation
under contract to
Marshall Space Flight Center
(M-FS-1871)

NASA TECH BRIEF

NASA Tech Briefs are issued to summarize specific innovations derived from the U.S. space program, to encourage their commercial application. Copies are available to the public at 15 cents each from the Clearinghouse for Federal Scientific and Technical Information, Springfield, Virginia 22151.

Electronic Frequency Discriminator

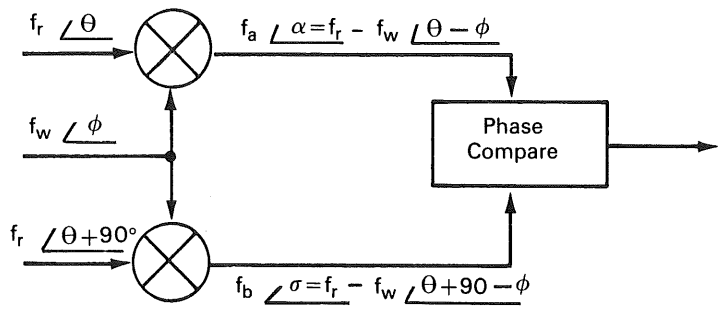

In a conventional frequency discriminator, the unknown frequency is compared against a circuit tuned to the desired center frequency. In such a discriminator, the accuracy of the discrimination is the stability of the discriminator itself. Replacement of the conventional discriminator with a digital frequency comparator, using a very stable reference frequency, would eliminate stability problems in the discriminator and allow discrimination to an accuracy of that of the reference frequency.

The figure shows the method of frequency comparison accomplished by use of a digital frequency comparator.

The unknown frequency f_w is mixed with the reference f_r at 0 degrees to form f_a, and with f_r at 90 degrees to form f_b in two different mixers. The outputs, f_a and f_b of the two mixers, are the same frequency but are shifted in phase by 90 degrees. The phase compare circuit looks at the phase of f_b when $\alpha = \theta - \phi = 0$ degrees. In this case, where $f_w < f_r$, the frequency f_b will lead f_a by 90 degrees which will cause the output of the phase compare circuit to go to a "1" level.

Implementation of a digital frequency comparator with such an operation, requires a difference mixer capable of mixing two signals so that the difference frequency varies from 0 to 1.2 MHz.

Using a shift register element as a mixer with one signal on the shift input and the other signal on the steering line, the maximum difference frequency is 1/2 of the clock frequency, or, in this case, 1.6 MHz if the reference frequency of 3.2 MHz is used as the clock. The shift register element transfers whatever logic condition exists on steering line to the output whenever the clock makes a negative transition.

The phase compare circuit is simply a shift register element with the f_a frequency on the clock and the f_b frequency on the steering. The negative transition of f_a during the "0" level of f_b would cause a "0" level to be transferred to the output. If f_b were at a "1" level during the negative transition of f_a, a "1" would be transferred to the output. The shift register might not generate the actual difference frequency at all difference frequencies occurring in the range of the frequency discriminator. However, as the difference frequency becomes small compared with the clock frequency, the actual difference frequency will be produced.

The fact that the actual difference frequency is not produced does not affect the effectiveness of the frequency comparator as both mixers will still produce the same frequency.

(continued overleaf)

This document was prepared under the sponsorship of the National Aeronautics and Space Administration. Neither the United States Government nor any person acting on behalf of the United States Government assumes any liability resulting from the use of the information contained in this document, or warrants that such use will be free from privately owned rights.

Note:

Inquiries concerning this invention may be directed to:

Technology Utilization Officer
Marshall Space Flight Center
Huntsville, Alabama 35812
Reference: B67-10151

Patent status:

Inquiries about obtaining rights for the commercial use of this invention may be made to NASA, Code GP, Washington, D.C. 20546.

Source: W. J. Reid
of Motorola, Inc.
under contract to
Marshall Space Flight Center
(M-FS-2434)

NASA TECH BRIEF

NASA Tech Briefs are issued to summarize specific innovations derived from the U.S. space program, to encourage their commercial application. Copies are available to the public at 15 cents each from the Clearinghouse for Federal Scientific and Technical Information, Springfield, Virginia 22151.

Study of Yttrium Iron Garnet Rods Reveals New Magnetostatic Echo Mode

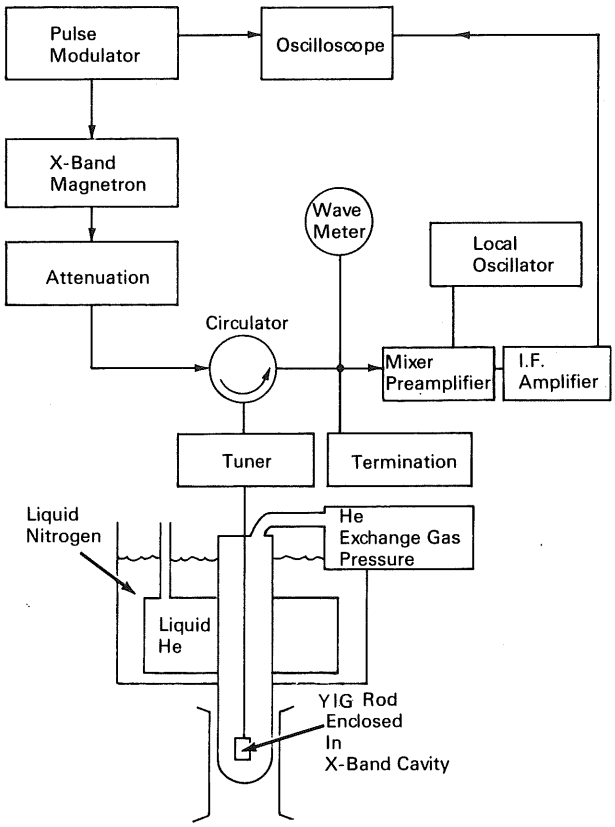

The problem:

To investigate the effect of magnetic field variation on magnetostatic echo modes in Yttrium Iron Garnet (YIG) rods. Previously reported magnetostatic echo modes in YIG rods experienced nonlinear time delays in their transit times as the magnetic field was varied.

The solution:

Research studies conducted on echo modes in YIG rods revealed an echo mode which differed in its behavior in magnetic fields from those previously reported. This mode, discovered at 8.5 gigahertz, experiences a linear variation of transit time with magnetic field variation. The time delay exhibited is a linear function of the applied magnetic field and the input pulse frequency.

How it's done:

The YIG rod is enclosed as shown in a microwave cavity resonating in the TE_{101} mode and experiments

(continued overleaf)

This document was prepared under the sponsorship of the National Aeronautics and Space Administration. Neither the United States Government nor any person acting on behalf of the United States Government assumes any liability resulting from the use of the information contained in this document, or warrants that such use will be free from privately owned rights.

were conducted in a temperature range of liquid helium (1.8°K) to room temperature (300°K). For studies at cryogenic temperatures, the microwave cavity is immersed in a liquid helium bath. The microwave cavity is contained between the two poles of a magnet, the source of the applied magnetic field.

The single YIG crystal is oriented such that its (100) cylinder axis is perpendicular to the radiofrequency field in the X-band cavity. The external applied magnetic field is either parallel or perpendicular to the rod axis, with the rod placed in the area of maximum radiofrequency magnetic field.

The cavity is coupled to the electronic system by a waveguide. Microwave pulses of 1 μsec duration are produced by the pulse modulator and trigger the X-band magnetron, which is the power amplifier for the microwave pulse. The pulse is then passed through an attenuator, which reduces the pulse to the desired amplitude. The pulse is then transmitted through a circulator and tuner into the cavity, where it is reflected back up the cavity into the circulator. The circulator isolates the input and output portions of the system, and the tuner adjusts the waveguide-cavity system to resonate in the TE_{101} mode.

The receiver portion of the electronic system consists of a mixer amplifier, a local oscillator, and an intermediate frequency amplifier. The local oscillator reproduces the signal and phase of the magnetron, when the YIG rod is not included in the system. The mixer preamplifier mixes the local oscillator signal with the output of the microwave cavity. The time delay properties of the YIG rod cause the output signal to be out of phase with the input signal. Wave beats are produced as a result of the net addition or subtraction of the two waves. The intermediate frequency amplifier amplifies the beat of the difference of the two waves and the resulting pulse is displayed on the oscilloscope.

The longest delay time for the magnetostatic pulse occurs at lower magnetic fields. At 80°K the slope of the delay time versus applied field plot is $dt/dH_0 = -0.24$ sec/gauss, when the applied field is parallel to the rod axis, and $dt/dH_0 = -0.21$sec/gauss, when the applied field is perpendicular to the rod axis. In general these pulse compression delay times may be obtained in two ways: (1) frequency swept input pulses are applied to the YIG rod and the magnetic field is held constant; (2) the input pulses are fixed in frequency, but the magnetic field is varied.

The new magnetostatic echo mode was observed in YIG rods of various diameters and lengths at an applied magnetic field of 100–200 gauss, slightly higher than required for the previously reported echoes. The generation and detection do not depend upon the presence of polished end faces on the rods. Furthermore, the insertion loss for these echoes has a lower limit of 30 db.

Notes:

1. The new techniques should be applicable to chirp-type radars, laboratory testing apparatus, and computer buffer storage units.
2. The radar implications may lead to higher power radars with longer range capabilities.
3. Inquiries concerning this invention may be directed to:

   Technology Utilization Officer
   Electronic Research Center
   575 Technology Square
   Cambridge, Massachusetts 02139
   Reference: B67-10153

Patent status:

Inquiries about obtaining rights for the commercial use of this invention may be made to NASA, Code GP, Washington, D.C. 20546.

Source: Dr. Robert W. Kedzie
of Sperry Rand Research Center
under contract to
Electronic Research Center
(ERC-37)

NASA TECH BRIEF

NASA Tech Briefs are issued to summarize specific innovations derived from the U.S. space program, to encourage their commercial application. Copies are available to the public at 15 cents each from the Clearinghouse for Federal Scientific and Technical Information, Springfield, Virginia 22151.

Design Concept for Improved Photo-Scan Tube

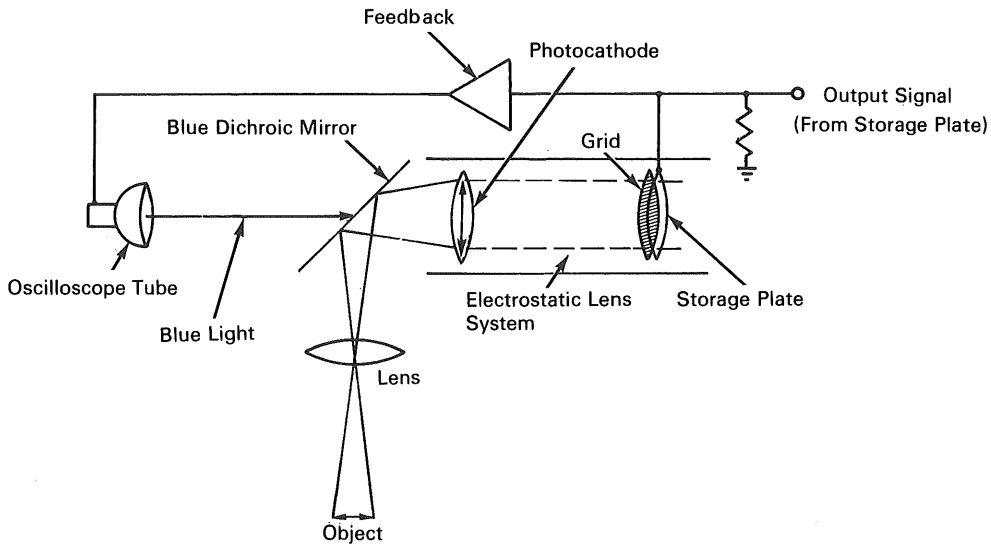

A particular design concept is presented for an unattended television photo-scan camera-tube where the complexity of internal beam scanning and critical beam-current adjustment of the conventional image orthicon is avoided by optical scan readout.

The conceptual photo-scan tube proper is roughly similar in construction and operation to a conventional image orthicon, with the important difference that with the photo-scan tube an external oscilloscope tube is used to scan the elements of an object in the field of view. There is no electron gun in the photo-scan tube proper.

The incident light from the object passes to a dichroic mirror, which reflects the ultraviolet and blue end of the spectrum and transmits the complementary portion of the visible spectrum. A photocathode having adequate spectral range converts the complementary optical image focused onto it, into an equivalent electron image, exactly as in the image orthicon. The electron image is focused by an electrostatic lens system onto a storage plate (again, as in the image orthicon). The light emerging from the oscilloscope tube is the spectral complement of the light passing through the dichroic mirror. In other words, the spectrum of the light excluded by the dichroic mirror and that emitted by the oscilloscope tube should be similar. The oscillosocpe tube scans the dichroic mirror, hence the photocathode, element by element, to produce effectively a scanning electron beam at the storage plate. The effect of the scanning beam is to discharge the electron image at the storage plate, element by element thus producing a video output signal as a function of time. The spectral separation of the two types of illumination on the photocathode avoids interference by the illuminated oscilloscope tube with the optical image except for the

(continued overleaf)

This document was prepared under the sponsorship of the National Aeronautics and Space Administration. Neither the United States Government nor any person acting on behalf of the United States Government assumes any liability resulting from the use of the information contained in this document, or warrants that such use will be free from privately owned rights.

particular element being scanned at that instant in the beam. Secondary electrons are captured by the grid positioned in front of the storage plate.

Feedback may be employed from the storage plate to the oscilloscope control grid to improve operation at low light levels.

Note:

This innovation is in the conceptual stage only; as of the date of publication of this Tech Brief, neither a model nor a prototype has been constructed.

Patent status:

No patent action is contemplated by NASA.

Source: Leonard R. Malling
(JPL-818)

NASA TECH BRIEF

NASA Tech Briefs are issued to summarize specific innovations derived from the U.S. space program, to encourage their commercial application. Copies are available to the public at 15 cents each from the Clearinghouse for Federal Scientific and Technical Information, Springfield, Virginia 22151.

A Power-Spectral-Density Computer Program

The problem:

When an engineer receives a random-noise test specification in the form of a PSD (Power-Spectral-Density) sketch on log–log coordinates, he may spend several hours or days on slide rule calculations to verify and interpret the data. A faster method for verification and interpretation was needed. A general computer program was required that would: (1) be easy to use; (2) give accurate results for any random-noise test specification without requiring modification other than changing data cards; (3) have an easy-to-read output; and (4) be self-explanatory.

The solution:

A computer program in which random-noise vibration test results can be simplified and made more meaningful for the test requester. The program can also be used to verify PSD test specifications, and set up automatic equalization equipment. An exact acceleration level for the shaped random noise can be calculated prior to the test.

How it's done:

Spectra ratios appear to simplify the interpretation of the test results; however, to synthesize a meaningful spectra ratio, it is necessary to have the exact acceleration densities of the ideal PSD spectrum for the vibration test at small frequency increments across the PSD spectrum. Spectra ratios are obtained when the ideal g^2/cps is ratioed against the vibration test g^2/cps. The results can be expressed in decibels as: $10 \log_{10} \times$ratio.

The program is written in three segments. The first segment, labeled $IBFTC MAIN, reads the data cards into the computer and prints out the results of the calculations. The calculations for acceleration density are performed in the second segment, labeled $IBFTC SUBPSD. This segment is a subprogram called SUBROUTINE PWR.

The third segment, labeled $IBFTC RMS, calculates the area under each slope (g^2_{rms}), then sums each area and takes the square root of the sum to obtain the total acceleration G_{rms} TOTAL. This is performed in a subprogram called SUBROUTINE GRMS.

To use the program, it is only necessary to understand what the variables are and how to represent them by numbers on card or code form sheet. There is one data card for each slope of the PSD specification, including zero slopes.

Notes:

1. Machine requirements are an IBM 7090/94 computer system.
2. Fortran IV was the programming language used.
3. Inquiries concerning this innovation may be directed to:

   COSMIC
   Computer Center
   University of Georgia
   Athens, Georgia 30601
   Reference: B67-10160

Patent status:

No patent action is contemplated by NASA.

Source: C. P. Chapman
Jet Propulsion Laboratory
(NPO-10126)

Category 01

This document was prepared under the sponsorship of the National Aeronautics and Space Administration. Neither the United States Government nor any person acting on behalf of the United States Government assumes any liability resulting from the use of the information contained in this document, or warrants that such use will be free from privately owned rights.

NASA TECH BRIEF

NASA Tech Briefs are issued to summarize specific innovations derived from the U.S. space program, to encourage their commercial application. Copies are available to the public at 15 cents each from the Clearinghouse for Federal Scientific and Technical Information, Springfield, Virginia 22151.

Sensing Disks for Slug-Type Calorimeters Have Higher Temperature Stability

The problem:

To provide a sensing disk for slug-type radiation calorimeters that will exhibit better performance at high temperatures (up to 2500°F) compared to copper and nickel disks that are presently used in commercial calorimeters.

The solution:

Fabricate the sensing disk from graphite, which has been heat-soaked at 1500°F to stabilize its emittance.

The thermocouple must be protected from the graphite in such a way that repeated temperature cycling does not change the thermocouple sensitivity. Most thermocouple materials, especially platinum/platinum–10 rhodium, are readily carburized when in contact with graphite. This protection is afforded by a tungsten coating which is applied to the back face of the graphite disk by vapor deposition. The thermocouple is then flash-welded to the tungsten.

Note:

Inquiries concerning this invention may be directed to:

Technology Utilization Officer
Marshall Space Flight Center
Huntsville, Alabama 35812
Reference: B67-10161

Patent status:

This invention is owned by NASA, and a patent application has been filed. Royalty-free, nonexclusive licenses for its commercial use will be granted by NASA. Inquiries concerning license rights should be made to NASA, Code GP, Washington, D.C. 20546.

Source: Southern Research Institute
under contract to
Marshall Space Flight Center
(M-FS-1867)
Category 01

This document was prepared under the sponsorship of the National Aeronautics and Space Administration. Neither the United States Government nor any person acting on behalf of the United States Government assumes any liability resulting from the use of the information contained in this document, or warrants that such use will be free from privately owned rights.

NASA TECH BRIEF

NASA Tech Briefs are issued to summarize specific innovations derived from the U.S. space program, to encourage their commercial application. Copies are available to the public at 15 cents each from the Clearinghouse for Federal Scientific and Technical Information, Springfield, Virginia 22151.

Closed Circuit TV System Monitors Welding Operations

A TV camera system incorporating a special vidicon tube with a gradient density filter has been devised for use in remote monitoring of TIG (tungsten-inert gas) welding of stainless steel. The welding operations involve complex assembly welding tools and welding skates in areas of limited accessibility. The welding skates include servo motors for feeding and positioning the filler wire, torch positioning, arc length control, and skate drive control. The camera is positioned so that the weld puddle, the filler wire feeding into the puddle, the torch, and the seam to be welded are in full view of the camera. This system enables the operator to make remote precision adjustments while viewing the actual welding operation on the TV screen. A permanent record of the welding process can be recorded on tape for later study.

Note:

Inquiries concerning this invention may be directed to:

Technology Utilization Officer
Manned Spacecraft Center
Houston, Texas 77058
Reference: B67-10162

Patent status:

Inquiries about obtaining rights for the commercial use of this invention may be made to NASA, Code GP, Washington, D.C. 20546.

Source: M. Gilman, et al
of North American Aviation, Inc.
under contract to
Manned Spacecraft Center
(MSC-11002)

Category 01

This document was prepared under the sponsorship of the National Aeronautics and Space Administration. Neither the United States Government nor any person acting on behalf of the United States Government assumes any liability resulting from the use of the information contained in this document, or warrants that such use will be free from privately owned rights.

NASA TECH BRIEF

NASA Tech Briefs are issued to summarize specific innovations derived from the U.S. space program, to encourage their commercial application. Copies are available to the public at 15 cents each from the Clearinghouse for Federal Scientific and Technical Information, Springfield, Virginia 22151.

Hybrid Solid State Switch Replaces Motor-Driven Power Switch

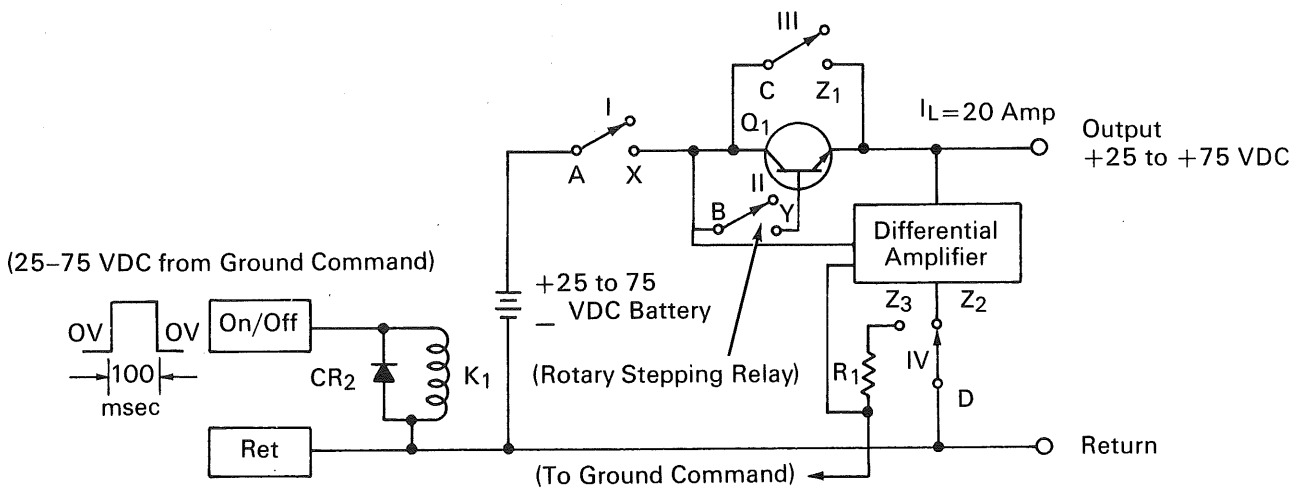

Note: All contacts are shown in the *off* position

The problem:

To replace existing motor-driven power switches used on spacecraft. Presently available motor driven switches are heavy, large, produce a stray external field, and are costly.

The solution:

A hybrid solid state switch that uses both a transistor circuit and relay contacts. The transistor circuit handles the turn-on and turn-off transients and allows only 3 volts or less to appear across an associated pair of relay contacts during contact transfer. By limiting the open circuit voltage to this small amount during transfer, unusually high transient currents at reasonable cycle life can be handled by a small relay contact. After transfer, the open circuit voltage may be increased, as this is only limited by the contact insulation.

How it's done:

A transistor circuit handles the closing and opening transients and limits to 3 volts or less the voltage appearing across an associated pair of relay contacts during contact transfer. The relay contacts are closed for the steady state load and provide a minimum voltage drop.

To eliminate battery current drain, the associated logic circuitry is completely disconnected during the steady state on or off periods. Ground (or remote) hard line commands bring this circuitry into action only during transfer to on or off. A single rotary stepping relay using rolling contacts is employed to accomplish the switching. It is the electrical equivalent of a 4-pole mechanical latching relay. The relay has provisions for make-before-break and make-after-break contact arrangements and is capable of performing certain time dependent logic functions, which are primarily of a switching nature.

(continued overleaf)

This document was prepared under the sponsorship of the National Aeronautics and Space Administration. Neither the United States Government nor any person acting on behalf of the United States Government assumes any liability resulting from the use of the information contained in this document, or warrants that such use will be free from privately owned rights.

To reduce weight, much of the logic circuitry is located at the remote command position. A differential amplifier measures the voltage that appears across the switch contacts that are to handle the full load current. When 3 volts or less appear across these contacts, a signal is sent to the remote logic to step the relay which will close the contacts. On opening, the circuitry maintains a maximum of 3 volts across the load current carrying contacts until the contacts are fully open wherein the voltage may then rise to its full open circuit value.

Notes:

1. The hybrid solid state switch has been breadboarded and satisfactory test results have been obtained at −10°, 25°, and 75°C.
2. This switch could be used for high-current switching at high voltages using small relay contacts where a compact, lightweight, reliable switching device is needed. It could be used, for example, for heavy duty motors where large starting currents are required to drive the pumps of washing machines and oil burners.
3. Inquiries concerning this invention may be directed to:

   Technology Utilization Officer
   Jet Propulsion Laboratory
   4800 Oak Grove Drive
   Pasadena, California 91103
   Reference: B67-10165

Patent status:

Inquiries about obtaining rights for the commercial use of this invention may be made to NASA, Code GP, Washington, D.C. 20546.

Source: A. I. Schloss and R. A. Booth
(JPL-931)

NASA TECH BRIEF

NASA Tech Briefs are issued to summarize specific innovations derived from the U.S. space program, to encourage their commercial application. Copies are available to the public at 15 cents each from the Clearinghouse for Federal Scientific and Technical Information, Springfield, Virginia 22151.

Efficient Millimeter Wave (140 GHz) Diode for Harmonic Power Generation

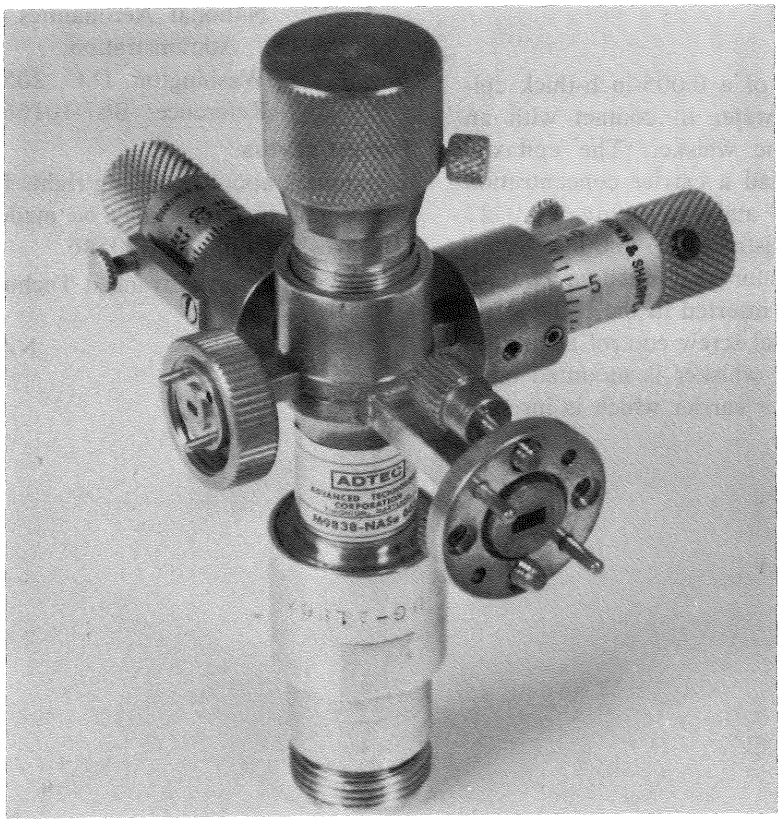

The problem:

To develop a varactor diode for efficient harmonic power generation (frequency multiplication) in the low-millimeter wavelength region of the electromagnetic spectrum.

For many years varactor diodes (reverse-biased p-n junction diodes) have been used to obtain microwave energy by harmonic multiplication from a lower radio frequency power source. Although a varactor pumped at some fundamental frequency is theoretically capable of producing an output at any desired harmonic with 100 percent efficiency, in practice, however, the conversion efficiency decreases rapidly with increasing fundamental frequency and desired harmonic number. As a consequence, commercially available varactors have in the past been limited in

(continued overleaf)

This document was prepared under the sponsorship of the National Aeronautics and Space Administration. Neither the United States Government nor any person acting on behalf of the United States Government assumes any liability resulting from the use of the information contained in this document, or warrants that such use will be free from privately owned rights.

application to the frequency range up to and including X-band (5.2 to 10.9 GHz). More recently (September 1965), an output of 2 milliwatts at 60 GHz has been reported for a tripler (20 GHz input) at an efficiency of 2.5 percent. The frequency cutoff of the commercially available varactor diodes is still too low for efficient operation in the millimeter wave region.

The solution:

An epitaxial gallium arsenide diode junction formed in a crossed waveguide structure and operated as a variable reactance (varactor) harmonic generator. The efficiency realized with these diodes in doubling from 70 GHz (4 mm wavelength) to 140 GHz (2 mm wavelength) ranged from 20 to 30 percent. The highest output power obtained at 140 GHz was 16 milliwatts.

How it's done:

The diode is comprised of a 0.005-inch-thick epitaxial n-gallium arsenide wafer in contact with an electrolytically pointed zinc whisker. The epitaxial layer, 4.0 microns thick, had a carrier concentration of 5.9×10^{16} donors per cm^3 and a resistivity of 0.0422 ohm-cm. The substrate resistivity was 0.00049 ohm-cm. The gallium arsenide wafer is mounted on a 0.020-inch-diameter pin which is inserted in the RG-138/U guide by use of a differential screw control at the top of the structure. The zinc whisker is mounted on a 0.020-inch-diameter whisker carrier which is inserted through the RG-98/U guide and held in place by an N-connector. The contact between the zinc whisker and the gallium arsenide wafer is made by adjustment of the differential screw, and the junction is formed by electrical pulsing through the N-connector while the dc current-voltage curve is displayed. The pulsing is continued until a reverse breakdown voltage (–16 to –19 volts) occurs. The formed diode is biased in the reverse conduction region at –3 to –4 volts and carefully tuned until harmonic output (140 GHz) is detected by a calibrated bolometer.

Note:

Inquiries concerning this invention may be directed to:

Technology Utilization Officer
Headquarters
National Aeronautics and Space Administration
Washington, D.C. 20546
Reference: B67-10166

Patent status:

Inquiries about obtaining rights for the commercial use of this invention may be made to NASA, Code GP, Washington, D.C. 20546.

Source: Advanced Technology Corporation
under contract to
NASA Headquarters
(HQ-61)

NASA TECH BRIEF

NASA Tech Briefs are issued to summarize specific innovations derived from the U.S. space program, to encourage their commercial application. Copies are available to the public at 15 cents each from the Clearinghouse for Federal Scientific and Technical Information, Springfield, Virginia 22151.

Data Retrieval System Provides Unlimited Hardware Design Information

In order to establish, control, and document the requirements for the design of checkout equipment for a sophisticated hardware system, it is necessary to design a large volume data storage and retrieval capability. Rather than establish separate card decks for each equipment combination as is done in conventional systems, it has been found more efficient to store the same data uniquely on magnetic tape identified as to system, location, and component. All data is input to the tape on a single format card that specifies the system in question, location and component effectively, the test point identification number, the operator's initial, the date, a data code, and the data itself. A single format address card permits computer sort and filing. Card information is compared to the computer program for legality and errors flagged by tabular update reporting. The report indicates the data record to be changed, the changes, changes rejected due to errors, the data record resulting, and a summary of all rejected changes. Data codes are used in logical equations that specify the data records selected and the sequence and format of their output. These equations permit technical personnel to generate tabular reports for documents plus cards or edited tapes as input media to other data systems. These equations have permitted variations of outputs as required by a specific complex program without continuously modifying the main computer programs of the basic data processing system.

Note:

Inquiries concerning this invention may be directed to:

Technology Utilization Officer
Manned Spacecraft Center
Houston, Texas 77058
Reference: B67-10170

Patent status:

Inquiries about obtaining rights for the commercial use of this invention may be made to NASA, Code GP, Washington, D.C. 20546.

Source: R. L. Swanson and R. D. Rawson
of North American Aviation, Inc.
under contract to
Manned Spacecraft Center
(MSC-1144)

Category 01

This document was prepared under the sponsorship of the National Aeronautics and Space Administration. Neither the United States Government nor any person acting on behalf of the United States Government assumes any liability resulting from the use of the information contained in this document, or warrants that such use will be free from privately owned rights.

NASA TECH BRIEF

NASA Tech Briefs are issued to summarize specific innovations derived from the U.S. space program, to encourage their commercial application. Copies are available to the public at 15 cents each from the Clearinghouse for Federal Scientific and Technical Information, Springfield, Virginia 22151.

Structural Analysis and Matrix Interpretive System (SAMIS)

The problem:

The high-speed digital computer has been an increasingly popular tool for analysis of mechanical structures. Many programs have been generated to handle small-deflection behavior for specialized classes of structures such as trusses, frames, and shells of symmetric forms and loading. Lack of generalization and lack of flexibility limit the use of the programs and complicate data handling. Problem-size restrictions are becoming increasingly significant.

The solution:

A Structural Analysis and Matrix Interpretive System (SAMIS) that simplifies automated structural analysis and eliminates reprogramming for problem changes. These two objectives are, to some extent, in conflict. They are reconciled by choosing the following programming concepts: (1) whenever possible, standardize, (2) provide a modular program, and (3) program for intermediate-size problems.

How it's done:

Standardization is achieved in this program for output formats, most input formats, error handling, tape handling and formats, and storage assignment. Modularity is achieved by dividing the calculation into a number of tasks that can be performed in the sequence specified by the analyst. A single intelligence system is used. This approach facilitates adding or removing modules from the system. Programming for intermediate-size problems is achieved by providing for the use of tapes for data and program storage. To make this operation efficient, tape search is avoided where possible.

The SAMIS system consists of four components: The initiating link, the Master Intelligence, the operation links, and the input data. The initiating link (MAKER) generates the problem flow control data. Master Intelligence (MINTS) provides the link and data handling intelligence. MINTS subroutines control tape search, tape reading, matrix coding, and error operations. The operation links perform operations on arrays of data. Matrix sorting, addition, inversion, multiplication, and input and output handling are some examples of operations performed. Input data are required by the links to define the operations to be performed (pseudo instructions) and data for the particular problem under consideration. The pseudo instructions define data assignments, data tape assignments, matrix identification, and the sequence of link selection.

This program can handle matrices of intermediate size (500–10,000) efficiently as well as smaller sizes (less than 500) with a small penalty as compared to a specialized in-core routine. Whenever possible, problems are kept in-core to avoid the use of tape storage, which is inherently more time consuming. Answers are obtained in a single pass on the machine. Emphasis has been placed on self-checking, simple recovery from faults, and preservation of calculations up to the fault point. Application flexibility is attained by leaving operation sequence and data disposition under control of the analyst.

Notes:

1. Machine requirements are an IBM 7090/4 or 704X/709X computer with a minimum of thirteen available magnetic tape units.
2. One FAP subroutine and 98 percent FORTRAN II were used to program SAMIS.

(continued overleaf)

This document was prepared under the sponsorship of the National Aeronautics and Space Administration. Neither the United States Government nor any person acting on behalf of the United States Government assumes any liability resulting from the use of the information contained in this document, or warrants that such use will be free from privately owned rights.

3. The unique matrix manipulative capability of this system would be of interest to the general users of high-speed digital computers.
4. Inquiries concerning this system may be directed to:

   COSMIC
   Computer Center
   University of Georgia
   Athens, Georgia 30601
   Reference: B67-10171

Patent status:

No patent action is contemplated by NASA.

Source: The Philco Corporation
Western Development Laboratories
under contract to
NASA Pasadena Office
(NPO-10130)

NASA TECH BRIEF

NASA Tech Briefs are issued to summarize specific innovations derived from the U.S. space program, to encourage their commercial application. Copies are available to the public at 15 cents each from the Clearinghouse for Federal Scientific and Technical Information, Springfield, Virginia 22151.

Numerical Data Frame Readout System Used in Testing Telemetry Systems

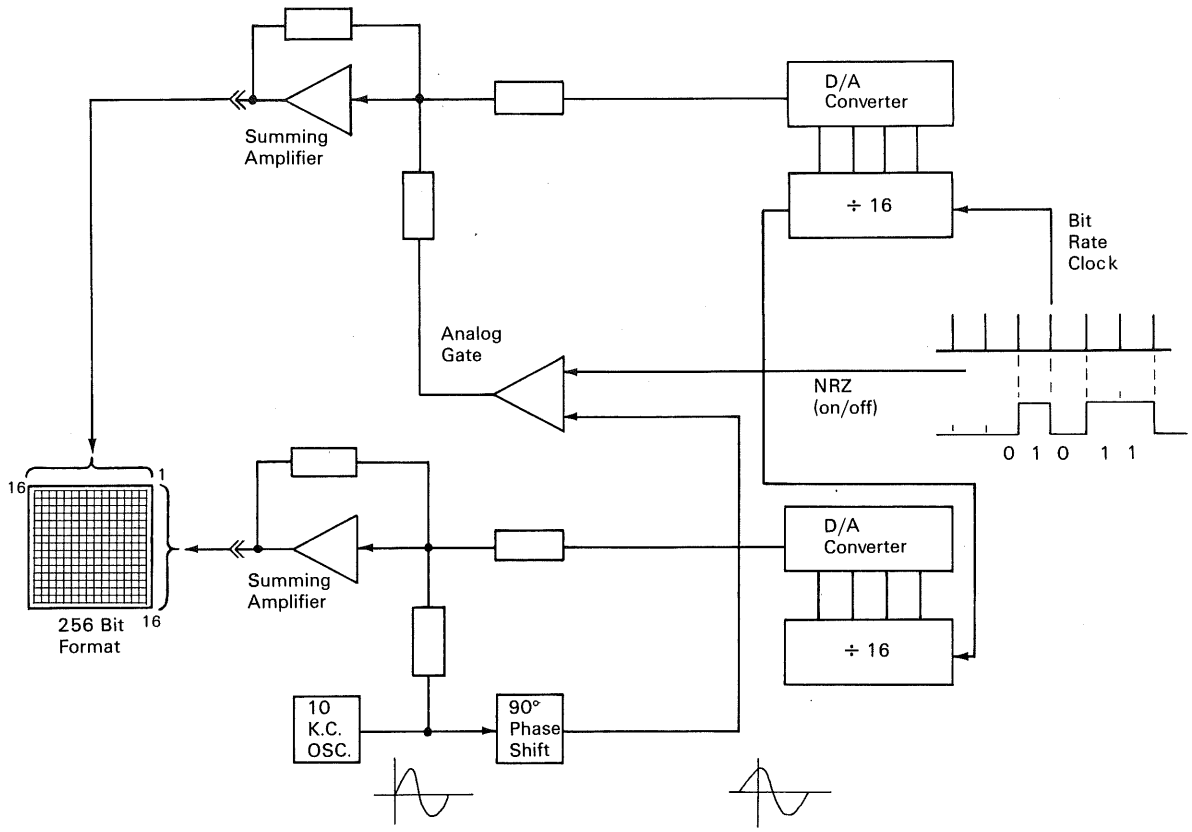

The problem:

To test digital telemetry systems; previous techniques used a display light and memory device for each data bit presented, or recording printout devices that were inherently slow, requiring data storage prior to readout in high speed equipment. Oscilloscope raster displays have also been used to present data in non-return-to-zero (NRZ) form rather than numerical form. In all these, certain deficiencies exist. In display light and memory systems, equipment is expensive, data analysis is time consuming, and adaption to real time is difficult. Oscilloscope raster displays are speed limited by the instrument's response and bandwidth characteristics.

The solution:

A display system offering direct readout as high data rates in numerical format and adaptable to photographic recording techniques.

(continued overleaf)

This document was prepared under the sponsorship of the National Aeronautics and Space Administration. Neither the United States Government nor any person acting on behalf of the United States Government assumes any liability resulting from the use of the information contained in this document, or warrants that such use will be free from privately owned rights.

How it's done:

The system displays a 256-bit rectangular data format with 16 rows and 16 columns assigned to each frame. The system lends itself to expansion or contraction to suit any desired format. The digital-to-analog (D/A) converters are composed of binary weighted resistors referenced by constant current sources that are controlled by 4-bit binary counters. The counters operate in a pure binary sequence (0 to 15) to produce a linear 16-level staircase function at the outputs of the respective D/A converters.

The 10 kc sine wave oscillator is a phase shift type, wherein the peak-to-peak amplitude is less than ½ the least quantized interval of the D/A converters. The 90° phase shift network consists of a simple rc network that is matched to the impedances of both the oscillator and the analog gate. The analog gate is linear with a very low offset voltage that may, in turn, be compensated by a bias. It is used to pass the 90° sine wave component, undistorted, to the operational amplifier summing resistor whenever a voltage level (binary "1") arrives at its control input from the NRZ data. The absence of a voltage level (binary "0"), in turn, inhibits the sine wave and produces a ground level at the gate output. The operational summing amplifiers have frequency response of 0 to 50 kc and open loop gain of 62 db.

In operation, the system forms an oscilloscope raster display generated by bit-to-bit and line-to-line electron beam deflection from staircase sweep signals, where each beam location is coherent with an incoming data bit. Coherence is readily established by clocking the binary counters with the bit rate clock. At each beam location, either a "1" or "0" is formed by generation of Lissajous figures, where the particular pattern is determined by the state of a data bit at the NRZ input. In the case of a "1" (voltage level in NRZ pattern), the vertical input receives a 10 kc sine wave component, while the 90° sine wave component is blanked at the horizontal input. If the data bit interval is 1 millisecond, the electron beam is deflected in a vertical direction over 10 cycles of the sine wave, thus generating a numerical "1" equal in height to the peak-to-peak amplitude of the sine wave. In the presence of a "0" data bit, both vertical and horizontal inputs receive sine wave components, and the 90° displacement in phase angle will cause a numerical "0" to appear. Ten cycles of beam deflection are again encountered for each bit presented, providing ample retrace for use with low persistence or low response time oscilloscopes. Synchronization of readout sequence with incoming data is accomplished by clearing the binary counters at the beginning of the readout sequence.

Notes:

1. This display system can be used to show bit dropouts at a memory output or to locate a failure or malfunction in a particular portion of a system. Telemetry system operation can also be checked for errors caused by noise or weak signals in the transmission link, thus determining bit error rates.
2. Inquiries concerning this innovation may be directed to:

   Technology Utilization Officer
   Goddard Space Flight Center
   Greenbelt, Maryland 20771
   Reference: B67-10175

Patent status:

No patent action is contemplated by NASA.

Source: John R. Cressey and Charles E. Cote (GSFC-551)

NASA TECH BRIEF

NASA Tech Briefs are issued to summarize specific innovations derived from the U.S. space program, to encourage their commercial application. Copies are available to the public at 15 cents each from the Clearinghouse for Federal Scientific and Technical Information, Springfield, Virginia 22151.

Thermal and Bias Cycling Stabilizes Planar Silicon Devices

The problem:

To reduce the inversion tendencies of planar silicon devices.

The solution:

Extend the time of the terminal burn-in or baking step carried out in the processing of the device (e.g., a planar transistor) and cyclically bias the collector-base junction of the device during the burn-in period. Alternate application and removal of reverse bias discharges and purges those ions which give rise to the problem of inversion and long-term drift during operation of these devices. For MOS field effect transistors, this processing step will reduce the surface-state density of inversion-causing ions and result in more stable threshold voltages.

Note:

Inquiries concerning this invention may be directed to:

Technology Utilization Officer
Electronics Research Center
575 Technology Square
Cambridge, Massachusetts 02139
Reference: B67-10176

Patent status:

Inquiries about obtaining rights for the commercial use of this invention may be made to NASA, Code GP, Washington, D.C. 20546.

Source: J. E. Meinhard and R. E. Harris
of North American Aviation, Inc.
under contract to
Electronics Research Center
(ERC-48)

Category 01

This document was prepared under the sponsorship of the National Aeronautics and Space Administration. Neither the United States Government nor any person acting on behalf of the United States Government assumes any liability resulting from the use of the information contained in this document, or warrants that such use will be free from privately owned rights.

NASA TECH BRIEF

NASA Tech Briefs are issued to summarize specific innovations derived from the U.S. space program, to encourage their commercial application. Copies are available to the public at 15 cents each from the Clearinghouse for Federal Scientific and Technical Information, Springfield, Virginia 22151.

A Theoretical Model for Determining Turbine Flowmeter Sensitivity

A lack of facilities for the calibration of turbine-type flowmeters at their application use–flowrates and in their application use–fluid necessitates the use of an extrapolation of available calibration data to use conditions in the absence of in-place calibration. For such an extrapolation to have any validity, an analytical model of the subject flowmeter must exist to guide in the selection of the extrapolation form.

Analysis is, therefore, performed to develop an expression for flowmeter performance that includes the effects of fluid friction, bearing drag, and magnetic drag upon helical rotor design. A direct solution is developed to describe fluid friction effects. Magnetic and bearing drag effects do not lend themselves to direct solution. However, expressions are derived for the form of the drag torques; for example, bearing drag torque is found to be quadratic in stream velocity.

Notes:

1. No empirical data have been generated in confirmation of the theory presented.
2. Inquiries concerning this innovation may be directed to:

   Technology Utilization Officer
   Marshall Space Flight Center
   Huntsville, Alabama 35812
   Reference: B67-10179

Patent status:

No patent action is contemplated by NASA.

Source: R. L. Smith
of North American Aviation, Inc.
under contract to
Marshall Space Flight Center
(M-FS-1172)

Category 01

This document was prepared under the sponsorship of the National Aeronautics and Space Administration. Neither the United States Government nor any person acting on behalf of the United States Government assumes any liability resulting from the use of the information contained in this document, or warrants that such use will be free from privately owned rights.

NASA TECH BRIEF

NASA Tech Briefs are issued to summarize specific innovations derived from the U.S. space program, to encourage their commercial application. Copies are available to the public at 15 cents each from the Clearinghouse for Federal Scientific and Technical Information, Springfield, Virginia 22151.

Study Indicates Fluid Digital Computation Systems Are Feasible

The use of fluid amplifiers with no moving parts for digital computation systems is of interest primarily because of their environmental tolerance and their expected long life (shelf and operating). Their tolerance to both nuclear and electromagnetic radiation and to extreme temperature ranges appears limited only by the fabrication material. Shock and vibration tolerance also appear excellent; fluid amplifiers have withstood vibration levels as high as 50g at 5000 cycles per second. Production costs of fluid amplifier components may be low because of the lack of close-fitting moving parts and bearing surfaces.

The digital integrator is the basic building block in digital differential analyzer (DDA) systems just as the operational amplifier serves as the basic building block in analog computational systems. Since the digital integrator (DI) is the basic building block for digital computation systems, it was chosen as the most appropriate component to investigate the feasibility of fluid amplifier implementation for such systems.

As a result of the study, the following conclusions and recommendations were made:

The results of this program are convincing that digital computation systems using fluid amplifiers are practical. The response speed of the fluid systems is adequate for many space applications; the potential for reliability in adverse environments such as nuclear radiation, heat, and vibration is superior to electronic circuitry. Typical applications which have been considered are a satellite attitude control, and a guidance computer for an escape "lifeboat" for manned orbital stations.

The work done on this project has dealt only with the digital integrator, since it was considered a key feasibility problem for digital systems. For any specific application it will be necessary to consider other parts of the system, such as power supply, sensors, displays and digital/analog converters. Investigation of these areas can be pursued most economically by considering specific application requirements.

As far as the digital integrator itself is concerned, the following represent areas where additional effort should be applied:

1. miniaturization
2. speed
3. power consumption
4. packaging design and fabrication techniques
5. instrumentation.

The work in these areas is closely interrelated. Miniaturization is required to improve speed and to reduce power consumption; the degree of miniaturization will affect the instrumentation requirements for monitoring and test, and will dictate certain fabrication methods. The package design must permit very close coupling of elements to achieve high operating speeds.

Complete details of this study are contained in: NASA Contractor Report, *Fluid Amplifier Digital Integrator,* prepared by General Electric, NASA, CR-61092, September 1965. Copies of this report are available from

Technology Utilization Officer
Marshall Space Flight Center
Huntsville, Alabama 35812
Reference: B67-10181

Patent status:

No patent action is contemplated by NASA.

Source: General Electric Company
under contract to
Marshall Space Flight Center
(M-FS-520)

Category 01

This document was prepared under the sponsorship of the National Aeronautics and Space Administration. Neither the United States Government nor any person acting on behalf of the United States Government assumes any liability resulting from the use of the information contained in this document, or warrants that such use will be free from privately owned rights.

NASA TECH BRIEF

NASA Tech Briefs are issued to summarize specific innovations derived from the U.S. space program, to encourage their commercial application. Copies are available to the public at 15 cents each from the Clearinghouse for Federal Scientific and Technical Information, Springfield, Virginia 22151.

Switching-Type Regulator Circuit Has Increased Efficiency

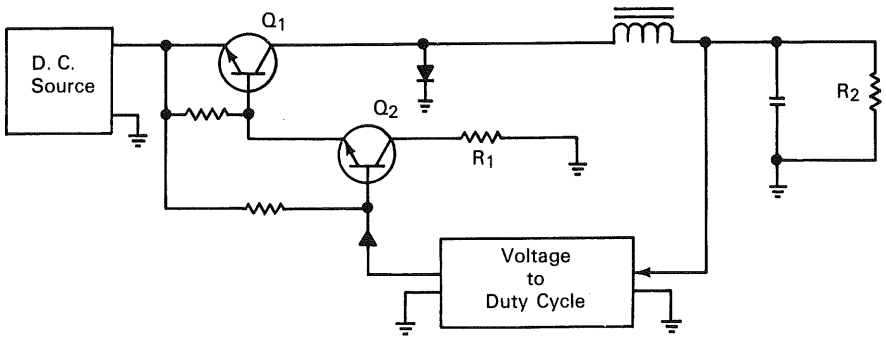

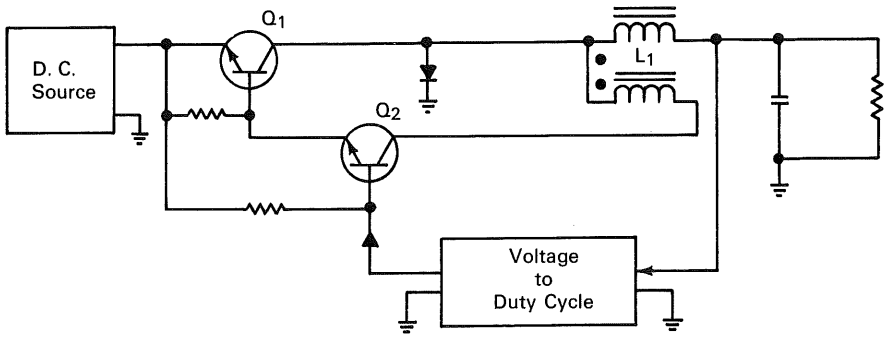

The problem:

Switching series regulators have required control networks for the transistor or electron tube switching element. Such control networks are usually operated by the source supplying power to the load and draw considerable amounts of power which is dissipated in the form of resistive losses. Such resistive losses must be removed from the regulator by means of bulky heat sinks for the switching element to operate in a stable manner. These losses result in reduced efficiency of the regulator circuit.

The solution:

A switching series regulator circuit in which substantially all of the current applied to the control circuit is fed to the load via an inductive network.

How it's done:

The significant increase in efficiency of the new circuit over that of the old may be seen by comparison of the two circuits. In the upper figure, the driver transistor Q_2 derives its collector K_c current I_c^2 through R_1 which causes a considerable power loss

(continued overleaf)

This document was prepared under the sponsorship of the National Aeronautics and Space Administration. Neither the United States Government nor any person acting on behalf of the United States Government assumes any liability resulting from the use of the information contained in this document, or warrants that such use will be free from privately owned rights.

I_c^2R. In the lower figure, collector current I_c is obtained from secondary winding, or tap, on inductance L_1 which is otherwise unchanged. In this way, current I_c is obtained from a low impedance circuit with resultant low I_c^2R losses. Additionally, I_c contributes to the load current flowing through R_2 by transformer action of the modified inductance L as load current increases. Thus, Q_1 base driving current increases as load current is increased and this causes Q_1 saturation voltage to remain low.

Notes:

1. By this approach, the overall efficiency of a regulator has been raised from a measured 83.8% to 94.5%.
2. With virtually no increase in complexity or cost, appreciable reduction in size is achieved by elimination of the previous heat sink requirement.
3. Inquiries concerning this invention may be directed to:

   Technology Utilization Officer
   Manned Spacecraft Center
   Houston, Texas 77058
   Reference: B67-10190

Patent status:

Inquiries about obtaining rights for the commercial use of this invention may be made to NASA, Code GP, Washington, D.C. 20546.

Source: William M. Clapp
of Sanders Associates, Inc.
under contract to
Manned Spacecraft Center

(MSC-1063)

NASA TECH BRIEF

NASA Tech Briefs are issued to summarize specific innovations derived from the U.S. space program, to encourage their commercial application. Copies are available to the public at 15 cents each from the Clearinghouse for Federal Scientific and Technical Information, Springfield, Virginia 22151.

Fast-Acting Calorimeter Measures Heat Output of Plasma Gun Accelerator

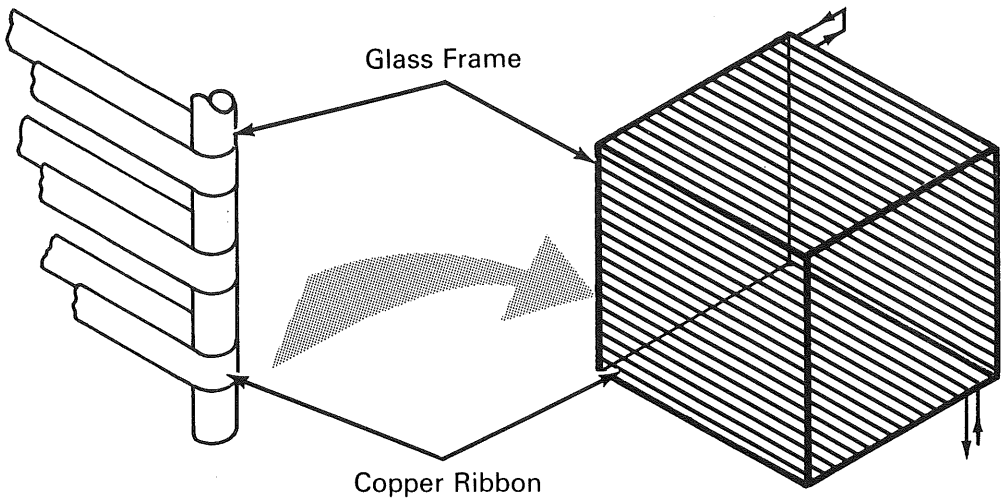

A calorimeter has been developed to measure the exhaust energy from a single shot of a pulsed plasma gun accelerator. It is especially suitable for use where the energy per pulse does not exceed 100 joules. The calorimeter has a fast response time, and only one measurement is required to determine the total incident energy. Calibration, including a determination of radiation losses, is simple and direct. The calorimeter consists of a long narrow ribbon of copper foil wound continuously around a glass frame to form a reentrant cavity.

The plasma heats the copper ribbon and changes its ohmic resistance as a discrete function of the total energy incident on the ribbon, independently of the local energy density. The resistance change, typically of the order of 10^{-2} ohm per joule of incident energy, is measured with a Wheatstone bridge circuit. The time resolution of this type of calorimeter is determined primarily by the thickness of the ribbon, and can be of the order of tens of microseconds. Consequently, measurements can be made before significant radiation losses can occur.

Notes:

1. The calorimeter can be made in sections if local energy density measurements are required.
2. This type of calorimeter should be generally useful for measurement of transient, high-energy heat fluxes.
3. Inquiries concerning this innovation may be directed to:

   Technology Utilization Officer
   Lewis Research Center
   21000 Brookpark Road
   Cleveland, Ohio 44135
   Reference: B67-10192

(continued overleaf)

This document was prepared under the sponsorship of the National Aeronautics and Space Administration. Neither the United States Government nor any person acting on behalf of the United States Government assumes any liability resulting from the use of the information contained in this document, or warrants that such use will be free from privately owned rights.

or to:

New Technology Representative
General Dynamics/Convair Division
Mail Zone 103-19
5001 Kearny Villa Road
San Diego, California 92112
Reference: B67-10192

Patent status:

No patent action is contemplated by NASA.

Source: A. V. Larson, L. Liebing,
and R. Dethlefson
of General Dynamics/Convair Division
under contract to
Lewis Research Center
(Lewis-388)

NASA TECH BRIEF

NASA Tech Briefs are issued to summarize specific innovations derived from the U.S. space program, to encourage their commercial application. Copies are available to the public at 15 cents each from the Clearinghouse for Federal Scientific and Technical Information, Springfield, Virginia 22151.

Technique for Strip Chart Recorder Time Notation

The problem:

To determine the time an event is recorded on the readout of a strip chart recorder, timing marks or "tics" must be placed on the strip. These may be made by a timing motor and cam-driven switch automatically or they may be annotated by hand. If entered automatically, the number of minute and hour tics would have to be counted from the beginning of the record in order to establish the time of a specific event. For a lengthy chart this could be a full-time task. It is also, however, a time consuming task to enter the time marks manually.

The solution:

A single recorder channel is used to present hours, tens of minutes, and minutes by a unique method of time increment identification.

How it's done:

A change in the hour is represented on the chart as a full scale pulse of duration T. This is followed by a number of narrow tics, e.g., of duration T/10, corresponding to the number of tens of hours. After a time delay, a number of tics are recorded which correspond to the number of units of hours. Thus the sequence–full scale T-pulse, 2T/10 tics, space, 3T/10 tics is interpreted as 23 hours. Tens of minutes are represented by a 2/3 scale T-pulse followed by a number of tics corresponding to the number of ten minute increments. Minutes are represented simply by 1/3 scale T pulses at one minute intervals.

Notes:

1. Advantages of this system are the use of only a single channel plus immediate identification of event time.
2. Inquiries concerning this innovation may be directed to:

   Technology Utilization Officer
   Goddard Space Flight Center
   Greenbelt, Maryland 20771
   Reference: B67-10196

Patent status:

No patent action is contemplated by NASA.

Source: The Roback Corporation
under contract to
Goddard Space Flight Center
(GSFC-473)

Category 01

This document was prepared under the sponsorship of the National Aeronautics and Space Administration. Neither the United States Government nor any person acting on behalf of the United States Government assumes any liability resulting from the use of the information contained in this document, or warrants that such use will be free from privately owned rights.

NASA TECH BRIEF

NASA Tech Briefs are issued to summarize specific innovations derived from the U.S. space program, to encourage their commercial application. Copies are available to the public at 15 cents each from the Clearinghouse for Federal Scientific and Technical Information, Springfield, Virginia 22151.

Electrometer Amplifier Operates Over Dynamic Range of Five Orders of Magnitude

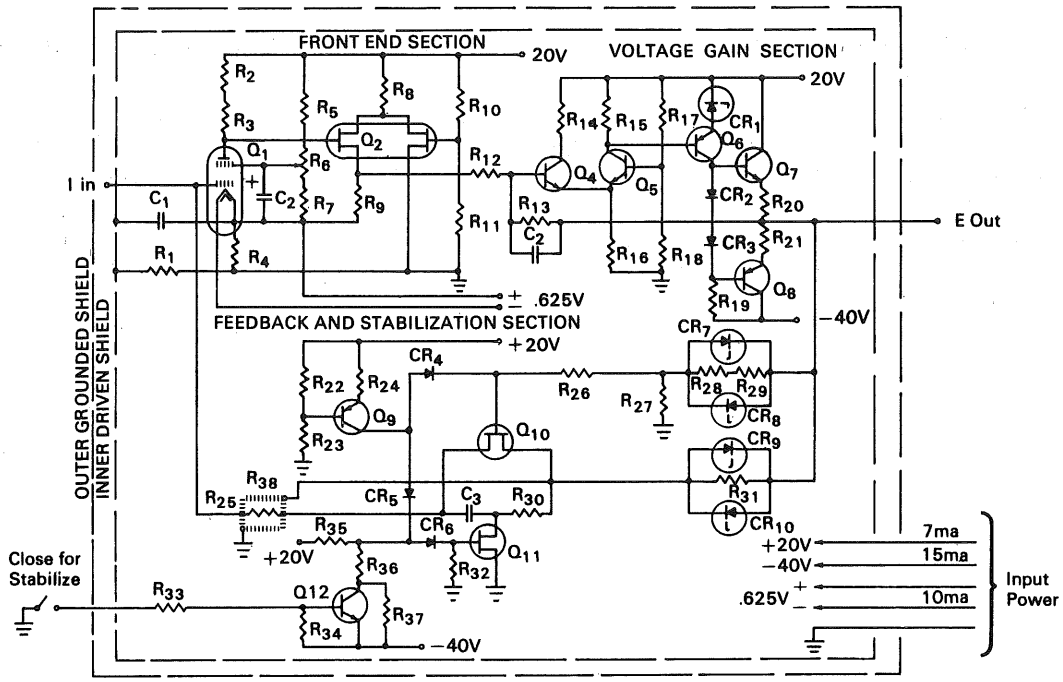

The problem:

To design an electrometer amplifier which would be capable of operation over a dynamic range of five orders of magnitude. An amplifier with these characteristics was required to detect currents in the Pioneer plasma probe experiment, with low power consumption, small offset error, and good frequency response.

The solution:

A special purpose electrometer amplifier which covers five orders of magnitude dynamic range, which converts positive (ion) currents in the range of 10^{-14} to 10^{-9} ampere to a corresponding voltage in the range of +.006 volt dc to –30.0 volts dc, and negative (electron) currents in the range 10^{-14} to 10^{-10} ampere to a corresponding voltage in the range of +.006 volt dc to +10 volts dc.

How it's done:

The five-order magnitude of dynamic range of the device is achieved by incorporating a zener controlled attenuator in the feedback path for the amplifier. When the breakpoint voltage of the diode is reached, part of the attenuator circuit is shorted out, thus modifying the overall gain of the amplifier to extend the range.

(continued overleaf)

This document was prepared under the sponsorship of the National Aeronautics and Space Administration. Neither the United States Government nor any person acting on behalf of the United States Government assumes any liability resulting from the use of the information contained in this document, or warrants that such use will be free from privately owned rights.

The frequency response of the amplifier is enhanced by packaging the system in a driven shield which is at the same potential as the pickup target. This technique effectively reduces the input capacity to the electrometer. Similarly, the high valued (2×10^{10} ohms) resistor used in the feedback path is shielded by a wound solenoid operated at a potential to cancel the distributed capacities of the feedback resistor.

Long term drift is minimized by periodic stabilization of the amplifier from external commands. The stabilization network included in the feedback loop employs a capacitive network for accumulating and storing the error caused by drift between periods of stabilization. On command, this error signal is referred back to the input to effectively cancel out the drift error signal of the amplifier.

Notes:

1. Listed below are the final specifications for the nonlinear dc periodically stabilized electrometer amplifier as developed:
   A. Current Range: 10^{-14} to 10^{-9} amp (ion); 10^{-14} to 10^{-10} amp (electron)
   B. Noise: 10^{-14} amp rms (max)
   C. D-C Offset: 10^{-14} amp (max)
   D. Drift between stabilization cycles for input currents below 10^{-11} amp: 3×10^{-16} amp/sec (max)
   E. Long term stability: ±2% (max)
   F. Temperature stability: ±5% (max)
   G. Frequency Response: 30 Hz
   H. Transresistance (R):
      (1) for $i_i<1.2\times10^{-11}$ amp ±5%
      $$R=\frac{eo}{i_i}=6\times10^{-11} \text{ ohm } \pm5\%$$
      (2) for $i_i>1.2\times10^{-11}$ amp ±5%
      $$R=\frac{eo}{i_i}=2\times10^{10}+\frac{6.96}{i_i} \text{ ohms } \pm5\%$$
2. Additional technical details are available from:
   Technology Utilization Officer
   Ames Research Center
   Moffett Field, California 94035
   Reference: B67-10199

Patent status:

Inquiries about obtaining rights for the commercial use of this invention may be made to NASA, Code GP, Washington, D.C. 20546.

Source: Norman Katz
of Marshall Laboratories
under contract to
Ames Research Center

(ARC-75)

NASA TECH BRIEF

NASA Tech Briefs are issued to summarize specific innovations derived from the U.S. space program, to encourage their commercial application. Copies are available to the public at 15 cents each from the Clearinghouse for Federal Scientific and Technical Information, Springfield, Virginia 22151.

Electronic Circuitry Used to Automate Paper Chromatography

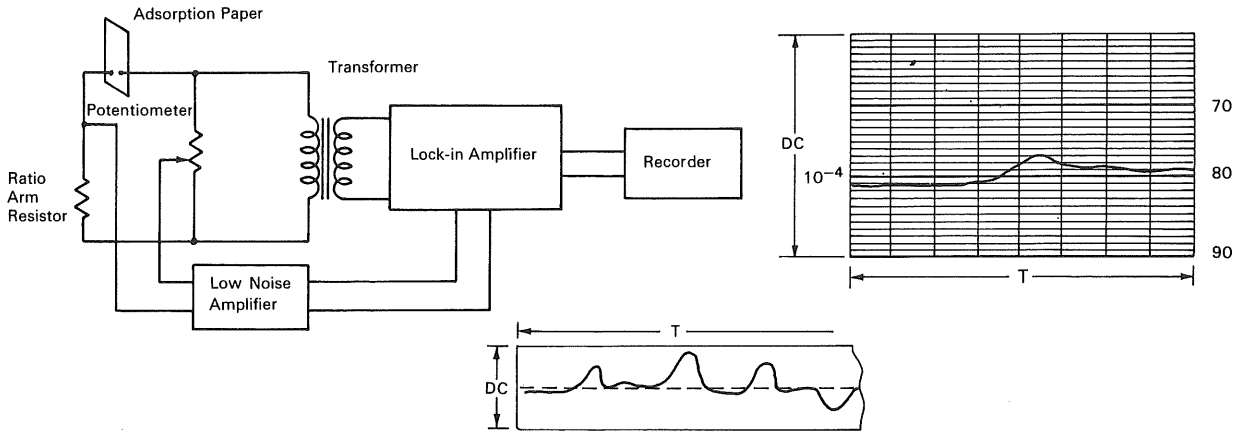

The problem:

To provide a convenient, easily operated paper chromatograph instrument that exhibits excellent sensitivity and furnishes a printed record of each test.

The solution:

An electronic circuit that measures and records changes in conductivity in a strip of chromatographic paper as different solutions are placed on it.

How it's done:

Gold electrodes are attached to each side of the adsorption paper and this combination is wired into a Wheatstone bridge circuit as one of its resistance elements. The bridge is completed by a potentiometer and ratio arm resistor, is excited by a 1-kc signal generated in a lock-in amplifier, and is connected in a balanced input through a transformer. Balance of the bridge circuit is detected by the combination of low noise amplifier, lock-in amplifier, and strip chart recorder. The system is phase coherent in that the output of the lock-in amplifier is a positive or negative dc voltage derived by comparing the reference phase through the transformer with the signal output of the low noise amplifier. The dc voltage from the lock-in amplifier moves a pen in the strip chart recorder in a direction corresponding to the polarity of the signal. The circuit is shown in the figure at the left.

In operation, a 1 microliter sample is placed on the paper and its passage down the paper is recorded as electrical output versus time from start. The figure at the right illustrates the chart readout of the passage of a 1 microliter sample of 10^{-4} mole/liter copper sulfate. A flow of water carrier down the paper is established and the potentiometer adjusted for zero bridge output as indicated on the recorder. A drop of the $CuSO_4$ is then placed on the paper and its passage down the paper is indicated by a trace of the recorder pen.

(continued overleaf)

This document was prepared under the sponsorship of the National Aeronautics and Space Administration. Neither the United States Government nor any person acting on behalf of the United States Government assumes any liability resulting from the use of the information contained in this document, or warrants that such use will be free from privately owned rights.

The lower figure represents separation of constituents of a mixture. As an example, the first peak could indicate a salt of copper, the second, one of iron, the third, one of manganese, and the fourth, a substance less conductive than the water carrier.

Notes:

1. In practice, this device has detected different mineral content in drinking water from two different buildings at the Jet Propulsion Laboratory.
2. This instrument could be used in analysis of plating baths to establish the relative concentration of constituents. It would also be useful for solution control in hydroponics.
3. Inquiries concerning this innovation may be directed to:

   Technology Utilization Officer
   Jet Propulsion Laboratory
   4800 Oak Grove Drive
   Pasadena, California 91103
   Reference: B67-10201

Patent status:

No patent action is contemplated by NASA.

Source: George R. Steffensen
(JPL-840)

NASA TECH BRIEF

NASA Tech Briefs are issued to summarize specific innovations derived from the U.S. space program, to encourage their commercial application. Copies are available to the public at 15 cents each from the Clearinghouse for Federal Scientific and Technical Information, Springfield, Virginia 22151.

Automated Microsyringe Is Highly Accurate and Reliable

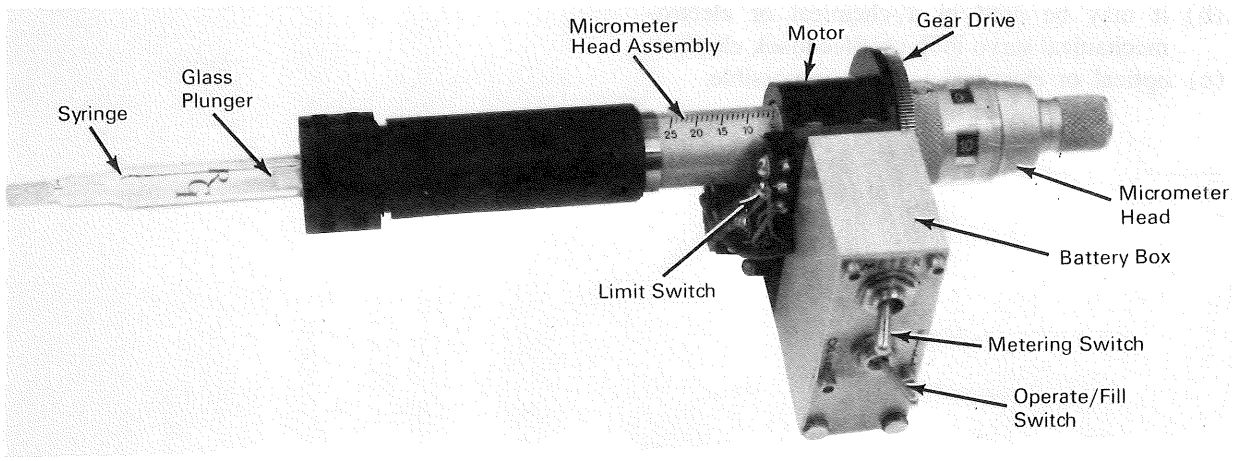

The problem:

To develop a device that will meter small (microliter) volumes of fluid. In performing chemical analysis with extremely small volumes of fluids (microchemistry) a simple, reliable and convenient metering device was needed.

The solution:

A standard syringe body and plunger that has been adapted to fit with a motor driven micrometer.

How it's done:

A miniature electric motor and self-contained battery drive the micrometer. The contents of the syringe can be metered very precisely since there is a proportional relationship between the amount of fluid drawn into or expelled from the syringe and the relative reading of the micrometer. The micrometer is a standard depth-type micrometer that has been mechanized by the addition of gears and a motor drive.

To meter one sample of solution, the metering switch is toggled from the normally open position, and the motor is energized. The cycle proceeds automatically until one unit volume of fluid has been metered out of the syringe. At the end of the cycle, the motor drives the stop cam and, in turn, the stop switch to its normally closed position. This process may be repeated as many times as there are samples of fluid within the syringe. On the last delivery sample, the limit switch will move to the opposite position to prevent any further fluid from being delivered by the syringe through manipulation of the metering switch.

One feature of the normally closed position of the stop switch is to provide dynamic braking on the motor when the cam lifts the stop switch and de-energizes the motor. This makes a short circuit across the motor, thus providing dynamic braking which permits accurate metering of fluids.

(continued overleaf)

This document was prepared under the sponsorship of the National Aeronautics and Space Administration. Neither the United States Government nor any person acting on behalf of the United States Government assumes any liability resulting from the use of the information contained in this document, or warrants that such use will be free from privately owned rights.

Notes:

1. This syringe can be used in automated wet chemical instrumentation. It is a highly adaptable device which can be used in a variety of applications where manually operated syringes are now used.
2. Commercial use of this instrument in automatic and semiautomatic chemical apparatus could be extensive. It may also find application in biomedical areas such as pathology laboratories in hospitals, or where extremely small and exact quantities of drugs or chemicals must be extracted or dispensed.
3. Simple packaging modifications would permit timed and metered medication dosage, while allowing the patient to have ambulatory freedom or outpatient status.
4. Other possibilities for this instrument are:
   (a) it can be operated by electrical signals;
   (b) it may be used in a chemical or electromechanical servo loop as a feedback element;
   (c) optical or electrical readout is possible.
5. Inquiries concerning this invention may be directed to:

   Technology Utilization Officer
   NASA Pasadena Office
   4800 Oak Grove Drive
   Pasadena, California 91103
   Reference: B67-10203

Patent status:

Inquiries about obtaining rights for the commercial use of this invention may be made to NASA, Code GP, Washington, D.C. 20546.

Source: J. L. Stuart
Jet Propulsion Laboratory
(NPO-10142)

NASA TECH BRIEF

NASA Tech Briefs are issued to summarize specific innovations derived from the U.S. space program, to encourage their commercial application. Copies are available to the public at 15 cents each from the Clearinghouse for Federal Scientific and Technical Information, Springfield, Virginia 22151.

A Conceptual, Parallel Operating Data Compression Processor

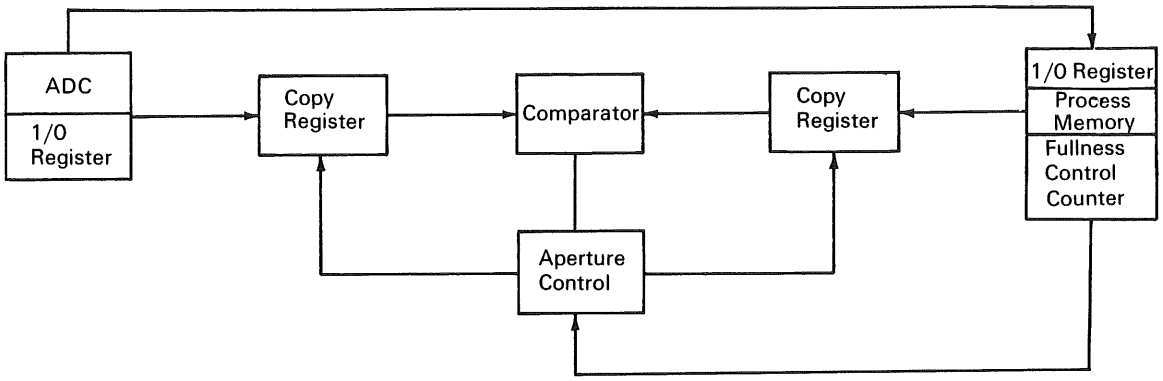

The problem:

Ever increasing bit rates in telemetry communication have caused prior art processors to become more and more bulky and complex due to their serial operation at relatively low speed.

The solution:

A novel data compressor processor concept wherein the system is, at the same time, a zero-order processor, a floating aperture, a variable aperture, and a binary integer aperture with a decoded buffer fullness counter directly constituting the aperture.

How it's done:

Two samples, one of which is the present sample (data point) assumed to be available in parallel at the analog-to-digital converter (ADC) input-output (I/O) register, the other being the last accepted sample (of the same channel that is presently being sampled) that is assumed to be available in parallel at the process memory (PM) I/O register, are to be compared as to relative magnitude. The amount of the aperture is then added to the smaller and the two samples are again compared using the same relative magnitude comparator. If the outcome of the second comparison is the same as that of the first, the difference between the two samples is equal to or greater than the amount of the aperture, indicating that the sample is accepted. Each of the two I/O registers is followed by a copy register so that the original value may be recovered if the outcome of the comparison between the altered and unaltered sample is inconclusive. These copy registers are connected as unidirectional binary counters with entries at each bit. Connected between the copy registers is a comparator with a single output that is pulsed only when the ADC sample is greater than the PM sample. The output from the comparator at time t_1 controls the adding of the aperture to either copy register. Because the aperture control is a binary integer, its addition to either copy register is simply a one term entry to the specific register at the proper position. The copy registers are connected as binary counters with regular forward carries. After the aperture has been added to either copy register, the output from the comparator at time t_2 will control the transfer of the number in the ADC I/O register to the PM I/O register.

(continued overleaf)

This document was prepared under the sponsorship of the National Aeronautics and Space Administration. Neither the United States Government nor any person acting on behalf of the United States Government assumes any liability resulting from the use of the information contained in this document, or warrants that such use will be free from privately owned rights.

A fixed-aperture processor so described may be modified to provide an exponentially variable aperture that would be a function of the process memory fullness. This requires a shift-right, shift-left shift register containing all zeroes except one "1" at any time. These shift-right, shift-left pulses derive from the process memory fullness level markers. The position of the "1" indicates the aperture size 1, 2, 4, 8, 16, 32, etc.

Note:

This development is in conceptual stage only, and as of date of publication of this Tech Brief, neither a model nor prototype has been constructed.

Patent status:

No patent action is contemplated by NASA.

Source: Tage O. Anderson
Jet Propulsion Laboratory
(NPO-10068)

NASA TECH BRIEF

NASA Tech Briefs are issued to summarize specific innovations derived from the U.S. space program, to encourage their commercial application. Copies are available to the public at 15 cents each from the Clearinghouse for Federal Scientific and Technical Information, Springfield, Virginia 22151.

Quartz Crystals Detect Gas Contaminants During Vacuum Chamber Evacuation

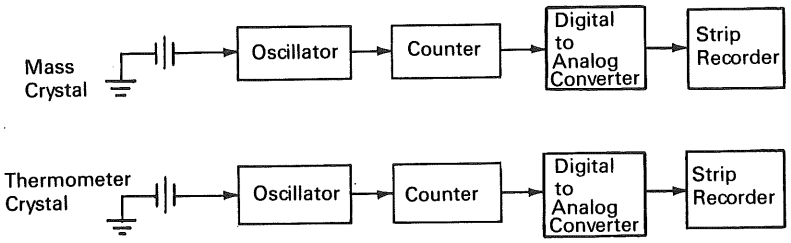

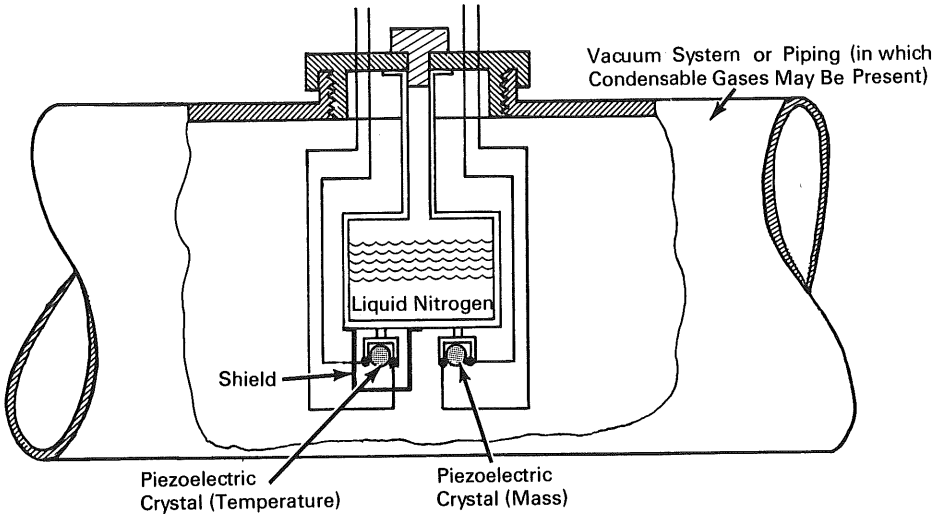

The problem:

To develop a device for detecting the presence of a condensable gas contaminant backstreaming into a vacuum chamber when a vacuum pump is being used to evacuate the chamber. Prior art used glass slides placed in the line from the vacuum chamber to the pump, which allowed the condensable contaminants to condense on the glass slides. The glass slides were then taken from the line, washed in a solvent, and the resulting fluid analyzed to determine whether a contaminant was present (such as oil). This was a laborious and time consuming process.

The solution:

An apparatus which consists of two piezoelectric quartz crystals mounted on a cooled support, one of which acts as a thermometer, the other detects a change in mass. Associated electronic equipment energizes the piezoelectric crystals and records changes in frequency from the crystals.

(continued overleaf)

This document was prepared under the sponsorship of the National Aeronautics and Space Administration. Neither the United States Government nor any person acting on behalf of the United States Government assumes any liability resulting from the use of the information contained in this document, or warrants that such use will be free from privately owned rights.

How it's done:

To condense the contaminant, liquid nitrogen or any liquid cool enough to allow the contaminant to condense, is used to fill the container upon which the crystals are mounted. One of the crystals is encased in a shield so that it is responsive only to temperature. The other crystal is open to receive the condensable contaminants so that a change in mass results from the deposit of contaminants upon the crystal. Increasing the mass of the crystal decreases the frequency with which it vibrates.

As the air is pumped out, any contaminants backstreaming into the vacuum chamber will be condensed on the mass-determining crystal, reducing its vibrating frequency. The other crystal monitors the temperature. Since the frequency with which a crystal vibrates is dependent upon temperature, it is necessary that the temperature be monitored so that a period during which there is a constant temperature may be used to make an accurate determination of the amount and presence of contaminants being collected or condensed on the mass-determining crystal. The change in frequency is registered by the counter and the strip recorder.

Notes:

1. The device has been fabricated and used at the Jet Propulsion Laboratory to indicate the presence of condensable contaminants backstreaming into a vacuum chamber being evacuated.
2. The device offers the following advantages:
   (a) it provides a remote and continuous time rate of change of contaminants condensing on a surface;
   (b) it is sensitive to 1×10^{-10} grams per sq. cm.
3. Inquiries concerning this invention may be directed to:

   Technology Utilization Officer
   NASA Pasadena Office
   4800 Oak Grove Drive
   Pasadena, California 91103
   Reference: B67-10205

Patent status:

Inquiries about obtaining rights for the commercial use of this invention may be made to NASA, Code GP, Washington, D.C. 20546.

Source: J. B. Stephens
Jet Propulsion Laboratory
(NPO-10144)

NASA TECH BRIEF

NASA Tech Briefs are issued to summarize specific innovations derived from the U.S. space program, to encourage their commercial application. Copies are available to the public at 15 cents each from the Clearinghouse for Federal Scientific and Technical Information, Springfield, Virginia 22151.

Plotter Design Simplifies Determination of Image Sensor Transfer Characteristic

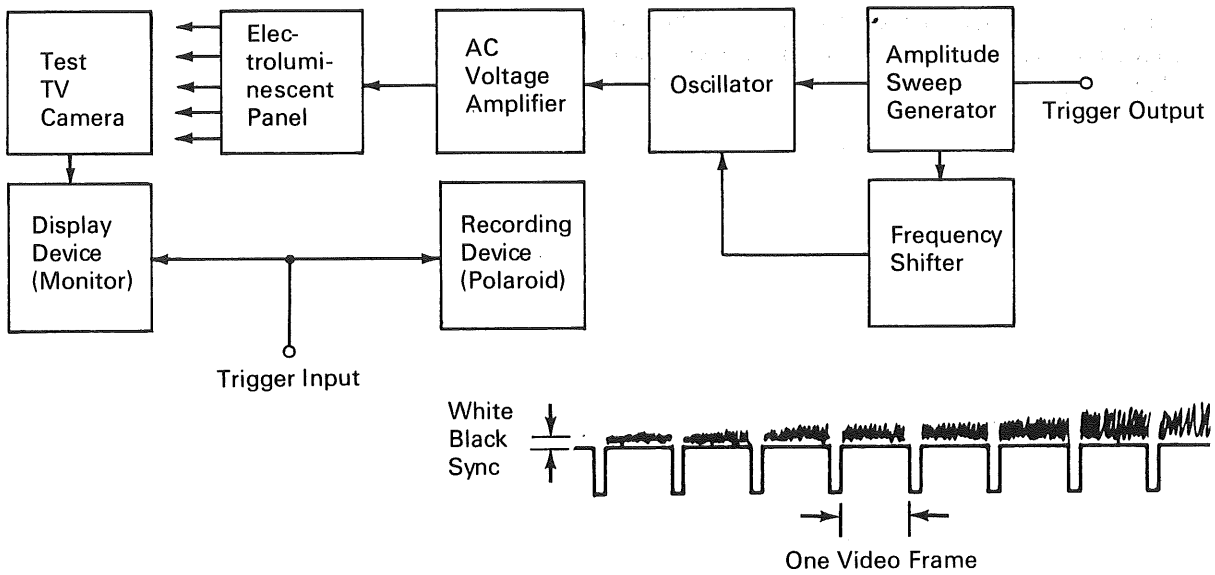

The problem:

To develop a technique for measuring the transfer characteristic of vidicons and other image sensors. Prior art used a light source of constant spectral emission which could be varied in intensity. To measure the transfer characteristic, the output of the image sensor was read on a current meter and the data were then plotted on a graph. The disadvantages of this method were that the possibility for error was high and its use was time consuming.

The solution:

Measure the light from a calibrated electroluminescent panel as a function of the current output of the image sensor. The plot of current output versus the calibrated light output of the electroluminescent panel is the transfer characteristic of the vidicon.

How it's done:

The vidicon tube to be tested is placed in the TV camera and operated at the desired line and frame rates. The camera is set in light communication with the electroluminescent panel to illuminate the photosensitive area of the vidicon. The sweep rate of the oscillator output voltage is adjusted to allow many frames of video to be taken during one sweep of the oscillator output. As the oscillator amplitude increases, the luminance of the electroluminescent panel increases. Any change in color temperature is compensated for by the frequency shifter. As the luminance increases on the electroluminescent panel, the

(continued overleaf)

This document was prepared under the sponsorship of the National Aeronautics and Space Administration. Neither the United States Government nor any person acting on behalf of the United States Government assumes any liability resulting from the use of the information contained in this document, or warrants that such use will be free from privately owned rights.

vidicon under test converts the light into an electrical signal which is processed by normal means and displayed on a device, which may be a TV monitor, and recorded by a photographic copier, video tape recorder, or recording oscillograph. The video output appears as shown in the lower figure. This plot of current output versus the calibrated light output of the electroluminescent panel is the transfer characteristic of the vidicon.

Notes:

1. The use of this method will save a great deal of time because it controls all the standard conditions for the test and automatically plots the output response.
2. The use of electroluminescent panels permits a wide range in the choice of illumination characteristics.
3. This method could be used as an automatic test unit in the transfer characteristic measurement of television camera tubes, photomultipliers, and phototubes.
4. This development is in a conceptual stage only, and as of date of publication of this Tech Brief, neither a model nor prototype has been constructed.
5. Inquiries concerning this innovation may be directed to:

   Technology Utilization Officer
   NASA Pasadena Office
   4800 Oak Grove Drive
   Pasadena, California 91103
   Reference: B67-10206

Patent status:

No patent action is contemplated by NASA.

Source: L. R. Baker
Jet Propulsion Laboratory
(NPO-10164)

NASA TECH BRIEF

NASA Tech Briefs are issued to summarize specific innovations derived from the U.S. space program, to encourage their commercial application. Copies are available to the public at 15 cents each from the Clearinghouse for Federal Scientific and Technical Information, Springfield, Virginia 22151.

FM Carrier Deviation Measured by Differential Probability Method

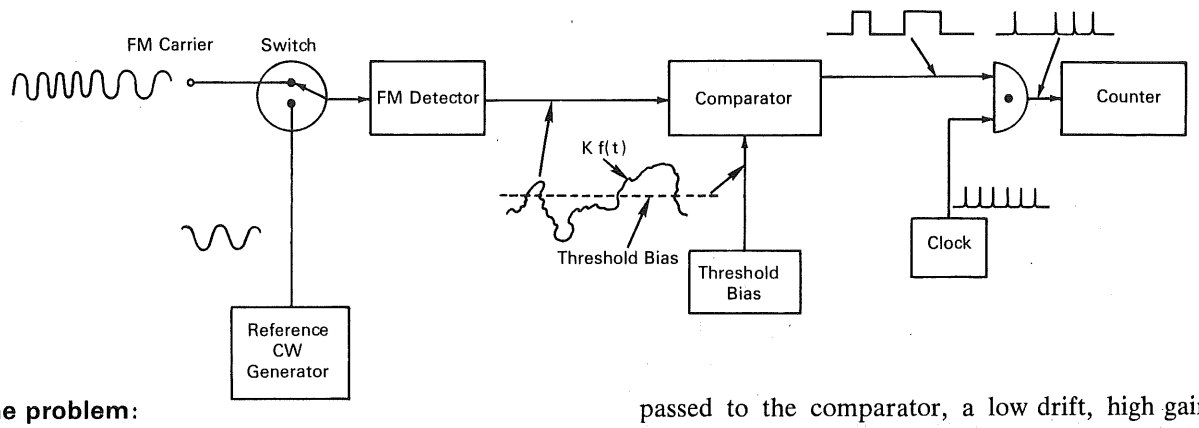

The problem:

To devise a system that will accurately measure deviation, caused by adjacent channel interference, of an FM carrier modulated by a complex signal.

The solution:

A differential probability FM deviation measuring system in which the peak-to-peak amplitude, or a certain portion of the peak-to-peak amplitude, of a complex signal is measured and related to the frequency shift of the carrier signal. With this system, the deviation is described in terms of a probability, as well as a peak value. The system utilizes commercially available equipment consisting of a reference cw generator, an FM detector, a comparator circuit, a 1-MHz crystal controlled clock, an *and* gate, and a counter.

How it's done:

The FM carrier enters the FM detector through a coaxial switch. The intelligence signal, Kf(t) (where K=gain of the FM detector and f(t)=complex modulation data), is extracted in the FM detector and passed to the comparator, a low drift, high gain, dc differential amplifier, where it is compared with a threshold bias. The output of the comparator is a "one", if Kf(t) is greater than the threshold bias. The comparator output and the high frequency clock signal (250 KHz counted down from the crystal controlled 1-MHz clock) are fed to an *and* gate. A coincidence of a "one" Kf(t) output and a clock signal gates the counter, which sums the enabled clock pulses over a given time interval. The value of the threshold bias, which is equal to the peak value of Kf(t) and prevents the clock from being enabled, corresponds to the peak deviation of the modulated carrier. The frequency of this peak deviation is determined by closing the coaxial switch to the reference cw generator and tuning to the frequency whose demodulated output just exceeds the threshold bias. The system clock is thereby enabled 100 percent of the time; thus the reference frequency corresponds to the peak deviation frequency.

The system can also determine the probability of exceeding a given deviation limit. Consider an FM

(continued overleaf)

This document was prepared under the sponsorship of the National Aeronautics and Space Administration. Neither the United States Government nor any person acting on behalf of the United States Government assumes any liability resulting from the use of the information contained in this document, or warrants that such use will be free from privately owned rights.

communication system limited to a peak deviation frequency with an allowable deviation from the limit for a given fraction of the time. The probability that this deviation will exceed the limit can be determined by tuning the reference generator to that value of the peak deviation frequency for which the threshold bias of the comparator just prevents the system clock from being enabled. When the reference generator signal is removed and the intelligence signal is compared to the threshold bias, the system clock will be enabled for only that fraction of the time the peak deviation is exceeded. The resultant clock count divided by the maximum possible clock count (i.e., for the clock enabled 100 percent of the time) would be the fraction of the time that the deviation limit is exceeded. This fraction is numerically equal to the probability of exceeding the deviation limit.

Notes:

1. Three types of implementation errors are associated with this system: clock resolution error, comparator hysteresis error, and reference frequency error. The clock resolution error and the comparator hysteresis error effectively cancel each other, but the reference frequency error is significant. Tests made on the deviation measuring system to verify its feasibility showed high accuracy on an individual component basis. The comparator circuit was found to have an error of less than 0.1 percent, and the system clock stability was better than 0.005 percent. Thus, for a large clock frequency to maximum modulating frequency ratio f_c/f_m, the measurement accuracy depends primarily on the generator and counter used in the system.
2. Inquiries concerning this innovation may be directed to:

   Technology Utilization Officer
   Marshall Space Flight Center
   Huntsville, Alabama 35812
   Reference: B67-10213

Patent status:

No patent action is contemplated by NASA.

Source: J. Haddican and A. F. d'Aquin, Jr.
of The Boeing Company
under contract to
Marshall Space Flight Center
(M-FS-2166)

NASA TECH BRIEF

NASA Tech Briefs are issued to summarize specific innovations derived from the U.S. space program, to encourage their commercial application. Copies are available to the public at 15 cents each from the Clearinghouse for Federal Scientific and Technical Information, Springfield, Virginia 22151.

Run Numbering System for Use with Data Recorders

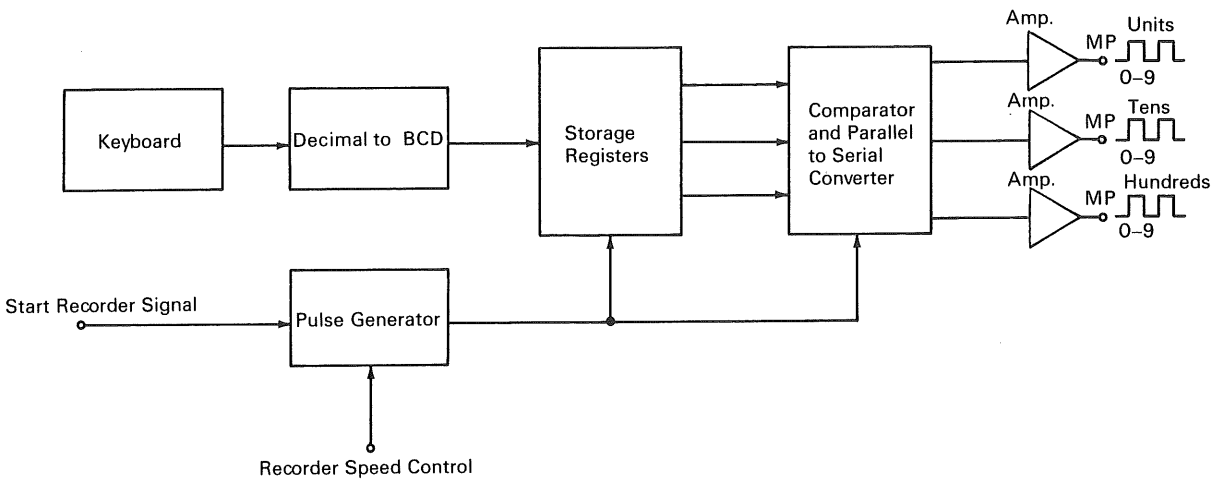

The problem:

To provide a permanent identification on the recorder traces of data runs by means of numerical pulse coding. The prior method was to manually mark the trace.

The solution:

A run numbering identification system that automatically enters, by pulse coding, the number of the current data run on the recorder trace.

How it's done:

The system consists of a keyboard, a decimal-to-binary-coded decimal (BCD) converter, storage registers, a comparator and parallel-to-serial converter, pen marker drive amplifiers, and a pulse generator. The starting run number is entered from the keyboard. This and successive numbers are displayed in the form of three separate series of pulses on the trace, each series displaying from 0 to 9 pulses, thus giving a total system capability of identifying 999 consecutive data runs. A series of gates driven by the storage registers and pulse generator, provides pulses to the marker pens corresponding to the current number. Each succeeding run number is automatically pulsed at the run start, and only the starting or initial run number must be entered at the keyboard.

Notes:

1. This system automatically identifies each trace, thereby saving time, bookkeeping, and frequent disturbance to records.
2. Inquiries concerning this invention may be directed to:

   Technology Utilization Officer
   Marshall Space Flight Center
   Huntsville, Alabama 35812
   Reference: B67-10215

(continued overleaf)

This document was prepared under the sponsorship of the National Aeronautics and Space Administration. Neither the United States Government nor any person acting on behalf of the United States Government assumes any liability resulting from the use of the information contained in this document, or warrants that such use will be free from privately owned rights.

Patent status:

Inquiries about obtaining rights for the commercial use of this invention may be made to NASA, Code GP, Washington, D.C. 20546.

Source: Logan L. Pease
of The Boeing Company
under contract to
Marshall Space Flight Center
(M-FS-2557)

NASA TECH BRIEF

NASA Tech Briefs are issued to summarize specific innovations derived from the U.S. space program, to encourage their commercial application. Copies are available to the public at 15 cents each from the Clearinghouse for Federal Scientific and Technical Information, Springfield, Virginia 22151.

Cleanroom Air Sampler Counts, Categorizes, and Records Particle Data

The problem:

To develop an instrument for monitoring particles in a cleanroom. The system must count, categorize, and record the particles in the air according to size and be able to function simultaneously in three separate areas.

The solution:

A light scattering particle counter in which a transducer head transforms light signals into electrical signals. The size/count data are coded at each of three samplers and conveyed by cable to a central data station where the information is decoded and printed out on paper tape.

How it's done:

The particle counter consists of a light source, an optical lens arrangement, and a photomultiplier tube. In operation, the filament of a lamp is focused on an opening, or slit, of known size in a light shield plate. The illuminated slit is imaged, via the optics, in the center of an aerosol stream.

A light scattering system is used, in which the light scattered from the incident light by the particles in the aerosol stream is collected by a similar receiving lens arrangement containing a slit of the same size with its focal points at the center of the aerosol stream. This arrangement optically defines an illuminated "cube" in space. The photomultiplier tube only "sees" light when a particle passes through this "viewing volume." The light intensity is a function of particle size; the larger the particle, the greater the intensity. The photomultiplier converts the light scattered by the particle into an electrical pulse. The voltage level of the pulse is directly proportional to the intensity of the light. Thus the pulses from any particles can be directed to specified channels according to voltage level and can be calibrated for particle size.

Notes:

1. The aerosol stream is conveyed through the transducer with a pumping system. A concentric tube arrangement provides an air sheath traveling down the annular space at the same linear velocity as the sample in the inner tube. This arrangement prevents loss of particles into the sample chamber, ensuring that the particles are counted only once and that the lenses remain clear.
2. Three samplers of the type described above were located inside a clean room. Each transmitted particle size data to the data center, located outside the clean room. The data center recorded size data on printed tape at preset times, providing a permanent record of the quality of air in the clean room at all times at three locations simultaneously.
3. Inquiries concerning this invention may be directed to:

   Technology Utilization Officer
   Marshall Space Flight Center
   Huntsville, Alabama 35812
   Reference: B67-10076

Patent status:

Inquiries about obtaining rights for the commercial use of this invention may be made to NASA, Code GP, Washington, D.C. 20546.

Source: M. B. Nelson
of IIT Research Institute
under contract to
Marshall Space Flight Center
(M-FS-2221)
Category 01

This document was prepared under the sponsorship of the National Aeronautics and Space Administration. Neither the United States Government nor any person acting on behalf of the United States Government assumes any liability resulting from the use of the information contained in this document, or warrants that such use will be free from privately owned rights.

NASA TECH BRIEF

NASA Tech Briefs are issued to summarize specific innovations derived from the U.S. space program, to encourage their commercial application. Copies are available to the public at 15 cents each from the Clearinghouse for Federal Scientific and Technical Information, Springfield, Virginia 22151.

Low Speed, Long Term Tracking Electric Drive System Has Zero Backlash

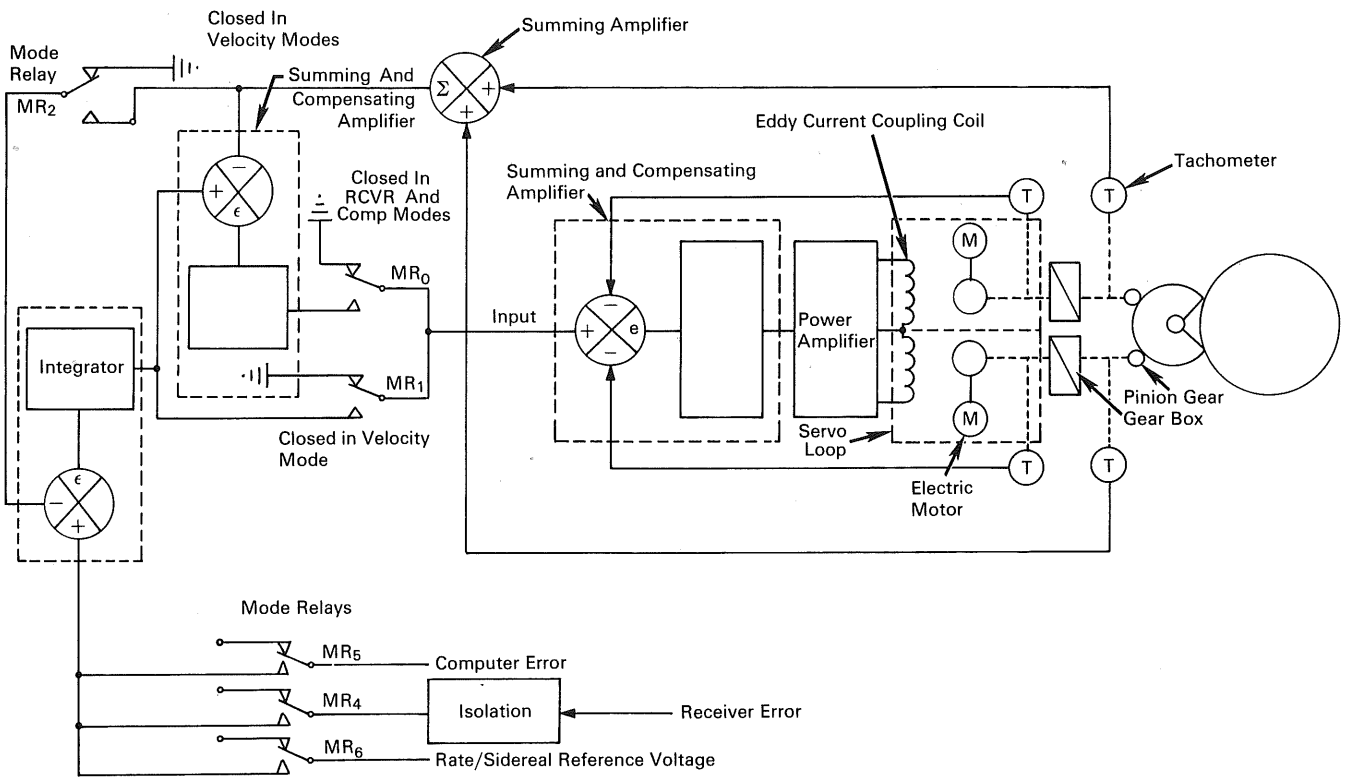

The problem:

To develop an electric drive system that will provide low speed, long term tracking of space probes, stars, and other targets that move at a sidereal rate. The system must be capable of moving a large structure, such as an 85-foot tracking antenna, a specified distance with essentially zero backlash, and without generating electrical noise and radio frequency interference. Prior art drive devices used silicon controlled rectifiers which caused radio frequency interference.

The solution:

An electric drive system that utilizes eddy-current energized actuators that are free from radio frequency interference generation and a solid state feedback amplifier with provisions for antibacklash biasing.

How it's done:

The electric drive system contains four primary servo loops: a current feedback loop, a motor rate loop, a pinion rate loop, and velocity and position

(continued overleaf)

This document was prepared under the sponsorship of the National Aeronautics and Space Administration. Neither the United States Government nor any person acting on behalf of the United States Government assumes any liability resulting from the use of the information contained in this document, or warrants that such use will be free from privately owned rights.

loops. The current feedback loop serves to decrease the effective inductive time constant of the large inductance inherent in the eddy-current coupling within the actuator by utilizing a feedback of the current in the actuator coil. The current loop is closed with an open loop gain such that the effective time constant of the eddy-current field coil is reduced to 0.01 second.

The motor rate loop comprises an eddy-current actuator, tachometer, summing and compensating amplifier, power amplifier, and eddy-current coupling coil which controls the amount of torque transferred from the constant speed electric motor to the eddy-current coupler to the output shaft and gear box.

A servo loop operating in opposition comprises an eddy-current actuator, tachometer, summing and compensating amplifier, power amplifier, and eddy-current coupling coil which controls torque transfer from the electric motor to the gear box. The antibacklash feature is inherent in this design since some power is applied to the dragging actuator when its opposite is driving the load. A bipolar dc signal, applied to the input of the differential network, controls the direction of the drive of the motor rate loop.

A pinion-rate loop operates in conjunction with the motor rate loop. The pinion-rate loop provides for damping of the gearboxes and senses the motion of the antenna. The upper pinion gear, which drives the antenna, is physically coupled to the upper tachometer. Similarly, the lower pinion gear and lower tachometer are coupled. The output (rate of speed) of these tachometers is summed in the summing amplifier, the output of which closes the pinion rate loop through the summing and compensating amplifier, or through the upper left mode relay and integrator when in one of the velocity modes of operation. When in the position modes of operation, the pinion rate signal closes a conventional rate loop around the pinion but in the velocity modes this signal, when summed with a rate reference, provides the error necessary for precise rate control.

In the receiver and computer modes (position loop), error signals are derived from receiver output or antenna axis resolvers respectively. The error signal is transferred through mode relays MR_4 or MR_5 directly into the integrator and then summed with the pinion rate signal in the summing and compensating amplifier.

Notes:

1. The drive system does not generate noise that could interfere with reception of very low level radiometry or space probe signals. The system is capable of multimode operation in that signals from several sources can be integrated to control the overall motion of the structure.
2. The system is compatible with electrohydraulic systems for slewing.
3. This drive system may be used to advantage wherever several signals must be combined to move a large structure a specified distance and where backlash is not tolerable. Such applications may include large machine tools controllable by analog or digital-to-analog devices.
4. Inquiries concerning this innovation may be directed to:

   Technology Utilization Officer
   NASA Pasadena Office
   4800 Oak Grove Drive
   Pasadena, California 91103
   Reference: B67-10220

Patent status:

No patent action is contemplated by NASA.

Source: Hans L. Richter and Floyd W. Stoller
Jet Propulsion Laboratory
(NPO-10173)

AEC-NASA TECH BRIEF

AEC-NASA Tech Briefs describe innovations resulting from the research and development program of the U.S. AEC or from AEC-NASA interagency efforts. They are issued to encourage commercial application. Tech Briefs are published by NASA and may be purchased, at 15 cents each, from the Clearinghouse for Federal Scientific and Technical Information, Springfield, Virginia 22151.

Amplifier Provides Dual Outputs from a Single Source with Complete Isolation

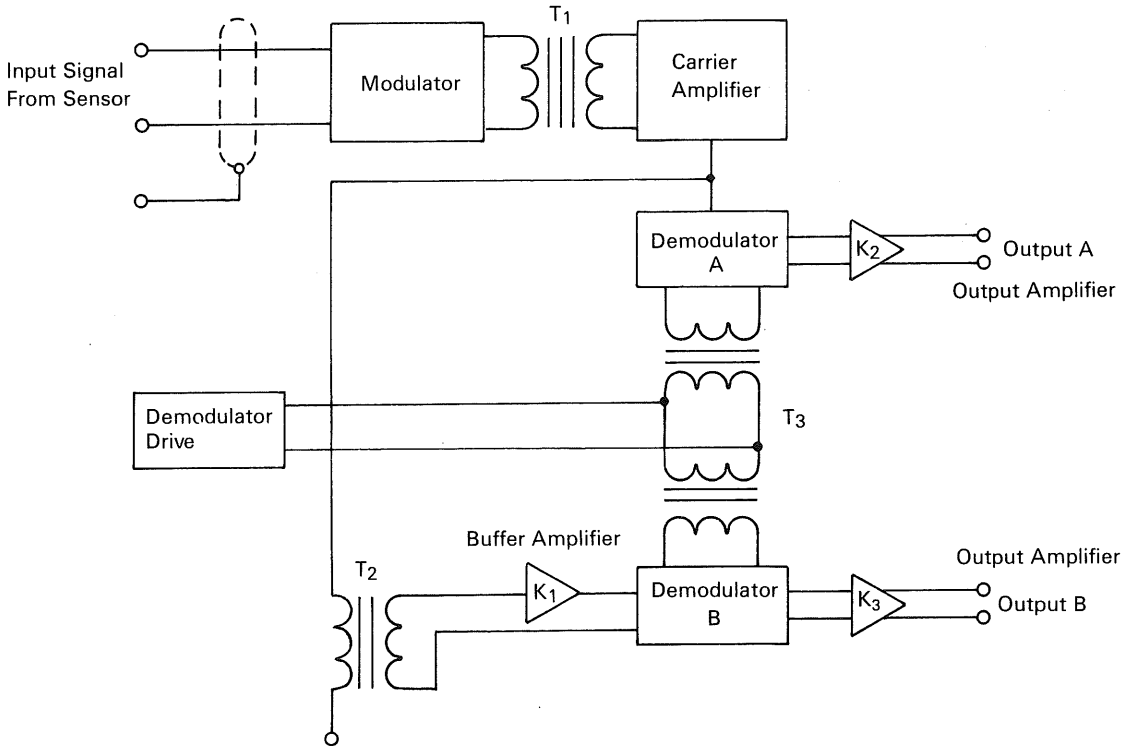

The problem:

To provide a means of obtaining two amplified outputs from a single input signal. Complete isolation from input to output is required. Also, since large differences in ground potentials may exist between the outputs, these stages must be isolated from one another. Dual outputs from one input signal have been used before. Previous designs, however, utilized one and sometimes both outputs in common which would not permit grounding of the two outputs at different potentials.

The solution:

An amplifier which provides transformer isolation and which uses modulation techniques to obtain separated outputs.

(continued overleaf)

This document was prepared under the sponsorship of the Atomic Energy Commission and/or the National Aeronautics and Space Administration. Neither the United States Government nor any person acting on behalf of the United States Government assumes any liability resulting from the use of the information contained in this document, or warrants that the use of any information, apparatus, method, or process disclosed in this document may not infringe privately owned rights.

How it's done:

A low-level signal from a basic sensor such as a thermocouple or strain gage is fed into differential input terminals of the amplifier through a twin conductor, shielded cable. The signal is immediately modulated to achieve an equivalent dc signal which is then coupled into a carrier amplifier via isolation transformer T_1. After amplification to the desired level, the signal from the carrier amplifier is fed into output demodulator A for conversion back to an amplified duplication of the original signal. The carrier amplifier signal is also fed into demodulator B. In this path, however, transformer T_2 and buffer amplifier A_1 are added ahead of the demodulator. Transformer T_2 provides carrier signal isolation and buffer amplifier K_1 provides impedance isolation to prevent demodulator B from introducing spikes back into transformer T_2.

Both demodulator A and demodulator B are simultaneously driven through separate isolated windings of transformer T_3. Output amplifiers K_2 and K_3 are included to provide low output impedance characteristics and load driving capability. No conductive paths exist between the input terminals and output A, between the input terminals and output B, or between output A and output B. The level of ground voltages is limited only by the breakdown voltages of the transformers, which can be controlled at the time of transformer production.

Notes:

1. In typical use, one output is employed as a control signal, while the second provides signal monitoring. Adaptations of this method for achieving dual isolated outputs may be used in devices other than amplifiers.
2. Inquiries concerning this innovation may be directed to:

   Technology Utilization Officer
   AEC–NASA Space Nuclear Propulsion Office
   U.S. Atomic Energy Commission
   Washington, D.C. 20545
   Reference: B67-10221

Patent status:

No patent action is contemplated by AEC or NASA.

Source: C. R. Dipple
of Westinghouse Astronuclear laboratory
and G. A. Neff
of Neff Instrument Corporation
under contract to
AEC–NASA Space Nuclear Propulsion Office
(NUC-10056)

NASA TECH BRIEF

NASA Tech Briefs are issued to summarize specific innovations derived from the U.S. space program, to encourage their commercial application. Copies are available to the public at 15 cents each from the Clearinghouse for Federal Scientific and Technical Information, Springfield, Virginia 22151.

Laboratory Pulse Modulator Uses Minority Carrier Storage Diodes

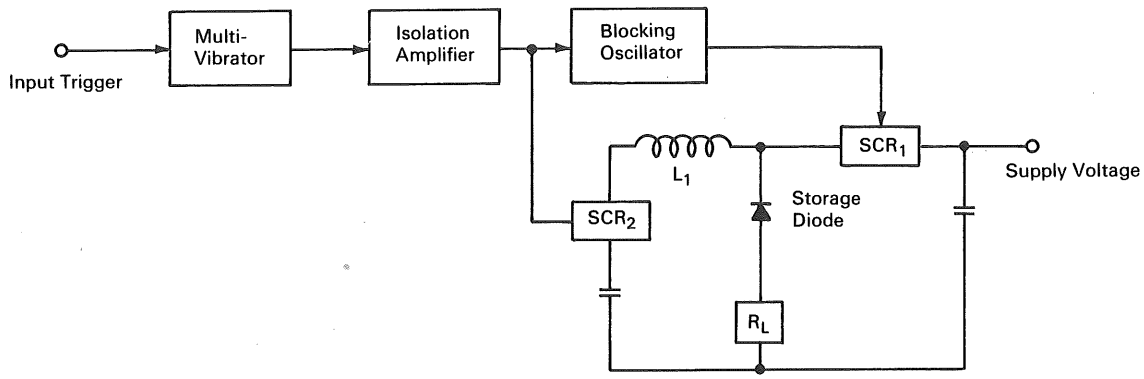

The problem:

Solid-state modulators producing high peak power have been generally limited to those employing either magnetic compression techniques or pulse forming networks and are usually restricted to operation at a single pulse width and pulse repetition rate.

The solution:

A pulse modulator capable of continuously variable pulse width over a 10 to 1 range of 1.0 microsecond to 0.1 microsecond and operation over a wide range of pulse repetition rates. Pulse width diversity is obtained by operating step-recovery diodes in the reverse conduction mode.

How it's done:

The block diagram illustrates the various stages used in the storage diode modulator. The first stage is a multivibrator turned on by a 3.5 volt, 1 microsecond system input trigger. The multivibrator output pulse, variable in width from 5 to 50 microseconds, is coupled to an emitter-follower type isolation amplifier whose output is directly coupled to SCR_2 that controls the charging current for the storage diode. The amplitude level of the gate trigger is approximately 5 volts, or about twice the minimum amplitude required. A second output from the isolation amplifier is inverted, differentiated, and used to trigger a blocking oscillator whose output is coincident with the multivibrator output trailing edge. Collector-base feed design of the blocking oscillator allows heavy loading without suppression regeneration. The output winding of the blocking oscillator is referenced to the cathode of the main discharge switch SCR_1 which provides the reverse storage diode current (load current). The gate output to SCR_1 is 10 volts to assure rapid turn on.

Note:

Inquiries concerning this invention may be directed to:

Technology Utilization Officer
Marshall Space Flight Center
Huntsville, Alabama 35812
Reference: B67-10226

(continued overleaf)

This document was prepared under the sponsorship of the National Aeronautics and Space Administration. Neither the United States Government nor any person acting on behalf of the United States Government assumes any liability resulting from the use of the information contained in this document, or warrants that such use will be free from privately owned rights.

Patent status:

Inquiries about obtaining rights for the commercial use of this invention may be made to NASA, Code GP, Washington, D.C. 20546.

Source: Sylvania Electronic Systems
under contract to
Marshall Space Flight Center
(M-FS-2442)

NASA TECH BRIEF

NASA Tech Briefs are issued to summarize specific innovations derived from the U.S. space program, to encourage their commercial application. Copies are available to the public at 15 cents each from the Clearinghouse for Federal Scientific and Technical Information, Springfield, Virginia 22151.

Glow Discharge Density Sensor Probe Life Is Extended

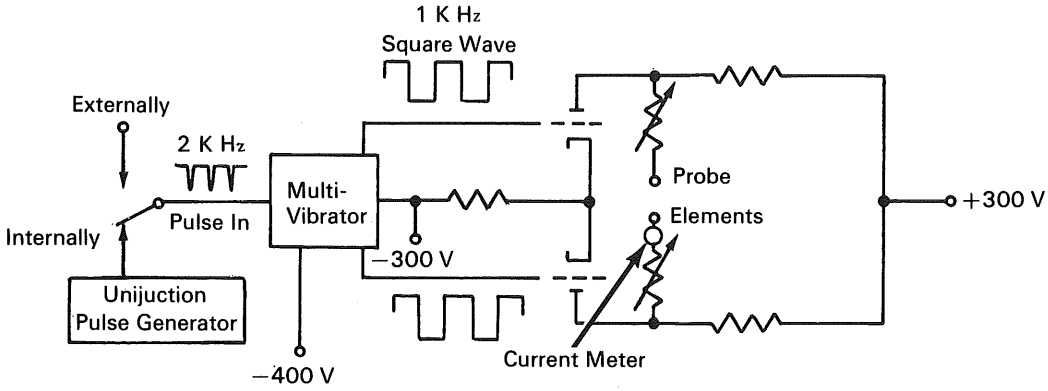

The problem:

Instability of dc-excited glow discharge-type density sensors has resulted in poor signal-to-noise ratios plus high electrode sputtering rates. The poor signal-to-noise ratios interfere with accurate system output analysis while the high sputtering rates result in shorting of the electrodes by buildup of metal deposited on the cathode. Low frequency rf transmitters producing sinusoidal ac excitation have been used but involve large quantities of expensive equipment and exhibit very critical adjustment problems.

The solution:

Excitation of the glow discharge probes by use of a high peak-to-peak voltage square wave capable of frequency variation from dc to 5 KHz. This results in good probe life plus output stability over a wide range.

How it's done:

The square wave excitation is provided by a bistable multivibrator driving a pair of 6L6 vacuum tubes with the probes direct-coupled to the plates of the tubes. Bias to the square wave generator provides voltage to the probes with a small (ideally zero) dc component relative to the density test cell ground, thus reducing proximity effects. Probe current metering is accomplished by a bridge rectifier and milliameter inserted in the probe circuit so that average probe current is indicated due to the ballistic galvanometer action. Due to the capacitance in the probe leads, meter circuit, and output tube plates, a current pulse, much higher than the average current, is obtained during the switching portion of the square wave. This current pulse is readily repeatable so long as the probe physical and electrical parameters are not changed. The capacitive effect is of benefit in that it causes the current to rise rapidly through the Townsend discharge region to the point where a self-sustained, normal glow is obtained. Current measured during this normal discharge is readily related to density of the medium within which the probes are discharged.

(continued overleaf)

This document was prepared under the sponsorship of the National Aeronautics and Space Administration. Neither the United States Government nor any person acting on behalf of the United States Government assumes any liability resulting from the use of the information contained in this document, or warrants that such use will be free from privately owned rights.

Note:

Inquiries concerning this invention may be directed to:

Technology Utilization Officer
Marshall Space Flight Center
Huntsville, Alabama 35812
Reference: B67-10229

Patent status:

Inquires about obtaining rights for the commercial use of this invention may be made to NASA, Code GP, Washington, D.C. 20546.

Source: R. A. Mahugh
of The Boeing Company
under contract to
Marshall Space Flight Center
(M-FS-1707)

NASA TECH BRIEF

NASA Tech Briefs are issued to summarize specific innovations derived from the U.S. space program, to encourage their commercial application. Copies are available to the public at 15 cents each from the Clearinghouse for Federal Scientific and Technical Information, Springfield, Virginia 22151.

Fused Diode Provides Visual Indication of Fuse Condition

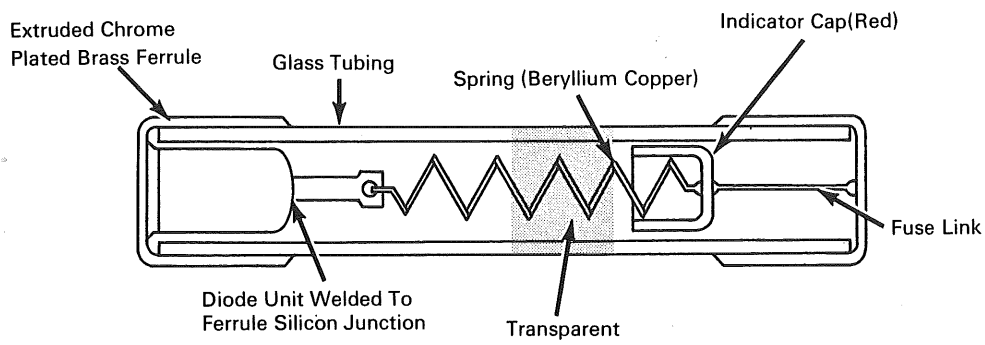

The problem:

To develop an electrical component that combines a circuit protective fuse and a semiconductor diode within a single transparent cartridge. The component should also provide means for visual indication of fuse condition to preclude the necessity of making resistance checks with an ohmmeter. This is of particular value where many fused diodes are used in a given system that must be periodically checked.

The solution:

A fused diode that combines a diode and a fuse within a common cartridge.

How It's done:

The fused diode consists of an elongated tube fabricated from a transparent heat-resistive material. The ends of the tube are closed with electrically conductive end caps, and layers of opaque material coat the interior for approximately one-third the length of the tube from each end. A diode is secured to one end cap, and a fuse, with a spring and indicator cap providing an electrical connection between the two elements, is secured to the other end. The spring serves to bias the indicator cap so that, should the fuse wire melt due to an excess of current, the indicator cap will be displayed in the transparent portion of the tube.

Notes:

1. The fused diode may be used wherever a need exists for circuit protection from the shorting of a specific component as opposed to protection from a short at any point within the circuit. It may be used in many applications where relay actuation requires arcing noise suppression. This device would be beneficial in multiple applications where a quick visual inspection of the fused diode could be performed instead of making the more time consuming ohmmeter checks on each diode to determine condition.
2. Inquiries concerning this invention may be directed to:

   Technology Utilization Officer
   Kennedy Space Center
   Kennedy Space Center, Florida 32899
   Reference: B67-10230

(continued overleaf)

This document was prepared under the sponsorship of the National Aeronautics and Space Administration. Neither the United States Government nor any person acting on behalf of the United States Government assumes any liability resulting from the use of the information contained in this document, or warrants that such use will be free from privately owned rights.

Patent status:

This invention is owned by NASA, and a patent application has been filed. Royalty-free, nonexclusive licenses for its commercial use will be granted by NASA. Inquiries concerning license rights should be made to NASA, Code GP, Washington, D.C. 20546.

Source: K. H. Jenkins
(KSC-67-16)

NASA TECH BRIEF

NASA Tech Briefs are issued to summarize specific innovations derived from the U.S. space program, to encourage their commercial application. Copies are available to the public at 15 cents each from the Clearinghouse for Federal Scientific and Technical Information, Springfield, Virginia 22151.

Improved Atmospheric Particle Analyzer

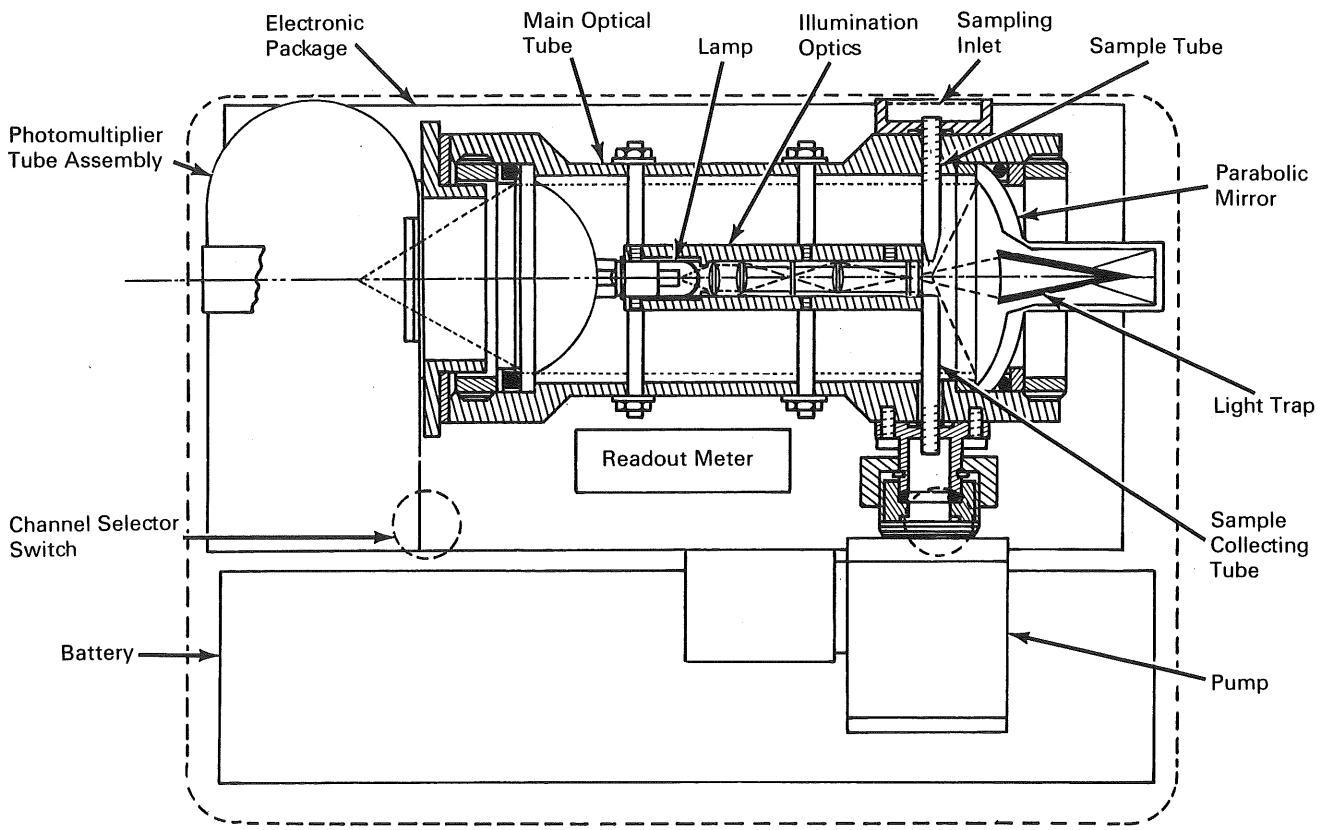

The problem:

To design an instrument that will measure aerosol particle concentrations in the range of 500 to 500,000 particles per cubic foot and size distributions in the range of 0.5 to 10 microns. The sampling rate of the instrument must be high enough to provide accurate readings within a reasonable time.

The solution:

An electro-optical instrument (nephelometer) that measures the light scattered from the aerosol particles at a controlled sampling rate to ensure laminar flow through the sample tube, and thereby eliminate the need for sheath air. This instrument employs a concentric configuration, wherein the scattering angle is

(continued overleaf)

This document was prepared under the sponsorship of the National Aeronautics and Space Administration. Neither the United States Government nor any person acting on behalf of the United States Government assumes any liability resulting from the use of the information contained in this document, or warrants that such use will be free from privately owned rights.

concentric with, but outside the illuminating beam. An evaluation of conventional particle-size analyzers based on optical scattering phenomena indicates that the concentric configuration is preferable for measuring small aerosol particles of unknown refractive index.

How it's done:

Air to be sampled is drawn through the sampling inlet, located at the top of the instrument. This air passes through the sample volume, which has a diameter of 1 millimeter and a length that does not exceed 5 times this dimension. The air then passes through the collecting tube from where it is exhausted through the pump, which is driven by a permanent magnet motor. The velocity of the flow is 10 meters per second, which is equivalent to 0.465 liter per minute, or 1 cubic foot per hour. Reduced pressure (or an oxygen environment) will not have an appreciable effect on this rate, as long as the pressure remains significantly higher than the loss (approximately 15 inches of water) in the sample tube.

Nearly uniform illumination is provided by a type 328 lamp focused on a square slit. The slit is then reimaged on the sample volume through a solid angle of ± 12 degrees, particular care being taken to avoid stray light from the lenses or tube walls. The main illuminating beam diverges into a light trap. Should a particle be present in the air sample, it will scatter light from the illuminating beam. The light scattered in a forward direction between 30 and 53 degrees from the axis of the main beam is intercepted by a parabolic mirror and focused on a photomultiplier. A pulse of 100-microsecond duration appears at the output of the multiplier, whenever a particle passes across the slit. The amplitude of this pulse increases with particle size. By detecting only those pulses above a certain amplitude, a count of the number of particles above a given size is obtained. The detection is accomplished by simultaneously counting pulses in 5 discriminators, each set at a different amplitude. The output of each discriminator is integrated, using an integration time constant of 8 seconds, and the number of particles per second is then available as a dc voltage. This voltage is measured at the end of the sampling time by connecting the output meter sequentially to each of the output channels by means of the channel selector switch.

Power for the lamp, motor, and electronic circuitry is obtained from a 6.2-volt regulator, which is supplied from a 7.2-volt, 750-milliampere-hour nickel–cadmium battery.

Notes:

1. The output from this instrument is suitable for either analog or digital pulse processing.
2. This instrument should be useful in air pollution measurements, dust control in clean rooms, abrasive particle monitoring, and control of mine ventilation systems.
3. Inquiries concerning this invention may be directed to:

   Technology Utilization Officer
   Electronic Research Center
   575 Technology Square
   Cambridge, Massachusetts 02139
   Reference: B67-10231

Patent status:

Inquiries about obtaining rights for the commercial use of this invention may be made to NASA, Code GP, Washington, D.C. 20546.

Source: Block Engineering, Inc.
under contract to
Electronics Research Center
(ERC-33)

NASA TECH BRIEF

NASA Tech Briefs are issued to summarize specific innovations derived from the U.S. space program, to encourage their commercial application. Copies are available to the public at 15 cents each from the Clearinghouse for Federal Scientific and Technical Information, Springfield, Virginia 22151.

An Improved Nuclear Magnetic Resonance Spectrometer

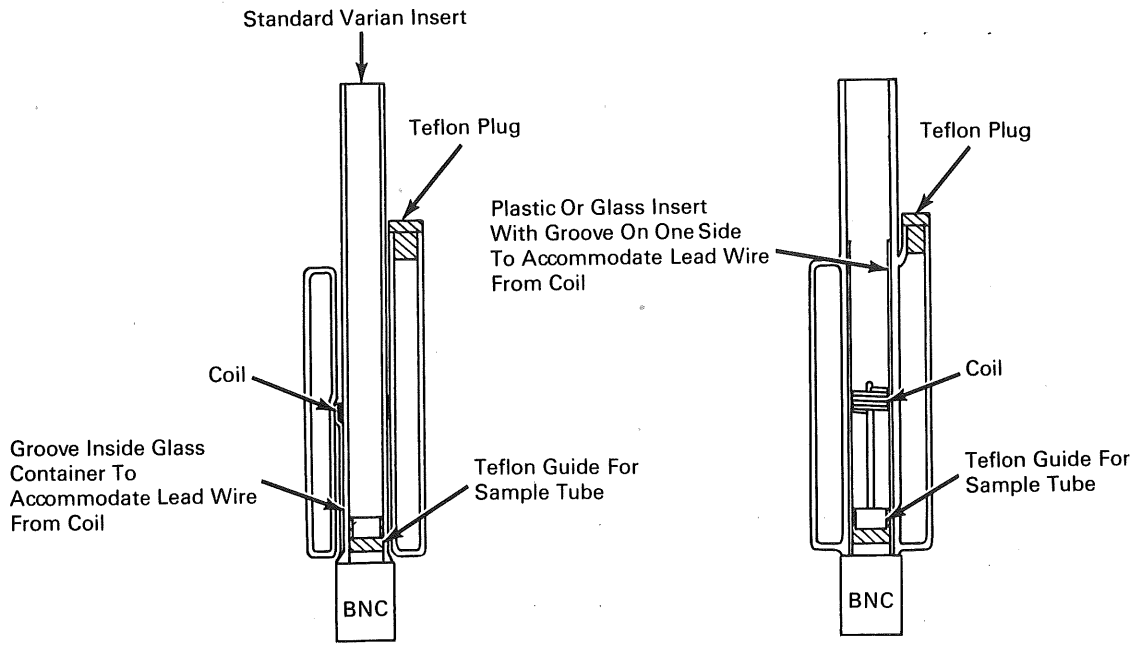

The problem:

To accomplish a high degree of nuclear stabilization of a nuclear magnetic resonance (nmr) spectrometer for low gyromagnetic ratio nuclei in a simple, straightforward manner. Such stabilization has previously been possible only through a complicated nmr system employing frequency synthesis.

The solution:

A device in which a sample of a reference substance is placed in a container that is slipped over presently used nmr receiver inserts. The transmitter excites the nuclei in this container external to the coil windings and the nuclei induce a signal in the signal coil of opposite phase to that of nuclei in a sample container inside the receiver coil winding.

How it's done:

A cylindrical sample container is placed coaxially about the common nmr insert as shown in the left figure. A reference sample in such a container has a sufficiently homogeneous field to give a signal suitable for locking the field and frequency of an nmr spectrometer with a simple audio modulation system of a type widely in use. Spectra of N^{14}, C^{13}, B^{11}, P^{31}, F^{19}, and H^{1} are successfully recorded when the spectrometer is stabilized on a sample of the corresponding nucleus in such a sample container external to the

(continued overleaf)

This document was prepared under the sponsorship of the National Aeronautics and Space Administration. Neither the United States Government nor any person acting on behalf of the United States Government assumes any liability resulting from the use of the information contained in this document, or warrants that such use will be free from privately owned rights.

receiver coil. Resolution of the order of 0.2 to 0.4 cps is achieved for N^{14}, C^{13}, B^{11}, and P^{31}.

Notes:

1. The ultimate in design to increase the field homogeneity at the sample and reference would be a one-piece insert with the receiver coil wound inside as shown in the right figure. The problems concerning such a design are under study, the winding and placement of the coil being the greatest at present.
2. Inquiries concerning this innovation may be directed to:

   Technology Utilization Officer
   NASA Pasadena Office
   4800 Oak Grove Drive
   Pasadena, California 91103
   Reference: B67-10234

Patent status:

No patent action is contemplated by NASA.

Source: Stanley L. Manatt and Daniel D. Elleman (JPL-762)

NASA TECH BRIEF

NASA Tech Briefs are issued to summarize specific innovations derived from the U.S. space program, to encourage their commercial application. Copies are available to the public at 15 cents each from the Clearinghouse for Federal Scientific and Technical Information, Springfield, Virginia 22151.

A Phonocardiogram Simulator

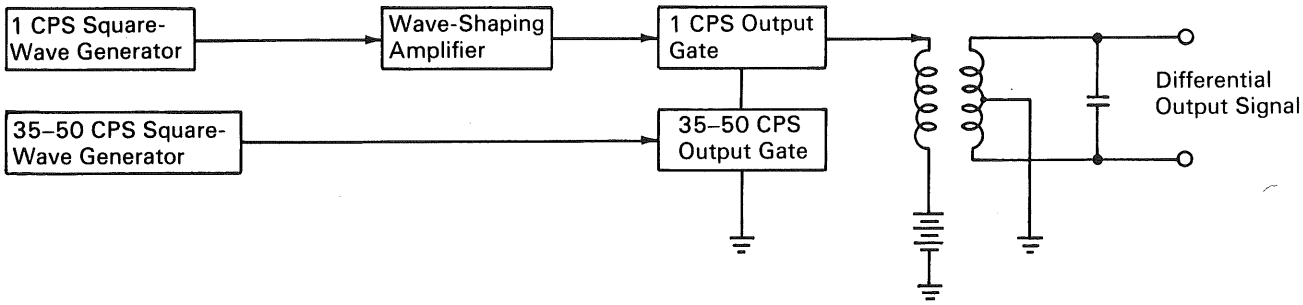

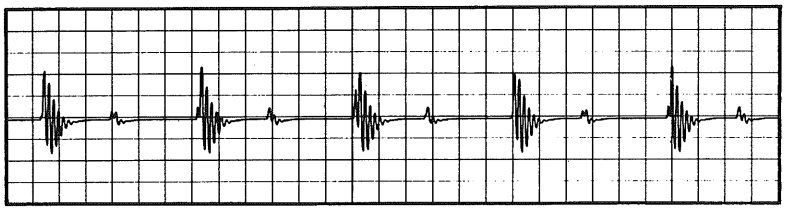

A phonocardiogram that produces a pattern of electrical signals exactly duplicating, in time and amplitude, the sounds of the human heart, has become a very important tool in physiological monitoring of astronauts in flight and during flight simulation. To calibrate and check out such a device, it is necessary to simulate, with accurate control, the timing and amplitude of heart activity signals.

A phonocardiogram simulator accomplishes this by the circuitry diagramed to produce the waveforms illustrated. As to timing and amplitude, the waveforms are adjustable to simulate all known ranges of human heart activity.

The 1 cps square wave multivibrator generates the basic repetition rate of the signal complex, as the 35–50 cps multivibrator generates the frequency within each "heart sound" pulse. Circuit resistances are used to control pulse amplitude and a potentiometer is used to regulate output voltage level.

Notes:

1. This innovation may be used to check out telemetry systems and instrumentation systems for phonocardiogram monitoring in hospitals and medical care centers, and may also be used in training personnel to use such systems.
2. Inquiries concerning this invention may be directed to:

   Technology Utilization Officer
   Kennedy Space Center
   Kennedy Space Center, Florida 32899
   Reference: B67-10239

(continued overleaf)

This document was prepared under the sponsorship of the National Aeronautics and Space Administration. Neither the United States Government nor any person acting on behalf of the United States Government assumes any liability resulting from the use of the information contained in this document, or warrants that such use will be free from privately owned rights.

Patent status:

Inquiries about obtaining rights for the commercial use of this invention may be made to NASA, Code GP, Washington, D.C. 20546.

Source: John M. Keefer
Kennedy Space Center
(KSC-67-94)

NASA TECH BRIEF

NASA Tech Briefs are issued to summarize specific innovations derived from the U.S. space program, to encourage their commercial application. Copies are available to the public at 15 cents each from the Clearinghouse for Federal Scientific and Technical Information, Springfield, Virginia 22151.

Web Belt Load Measuring Instrument Has Excellent Stability

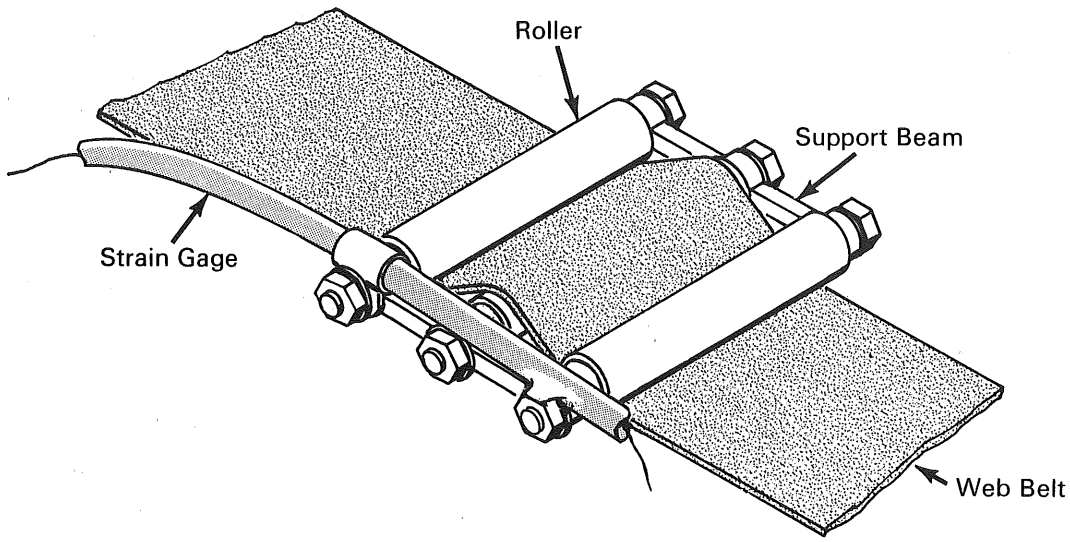

The problem:

Prior methods of belt or strap load measurement required strain gage instrumentation of end fittings with reduced cross section or the cutting, insertion, and reassembly of the belt system using a load link. Load links are available for high level loads but perform poorly at low loads and require disassembly and reassembly of the belting at each use.

The solution:

A web belt load measuring system that may be partially disassembled and installed on an existing belt without cutting or re-threading the belt.

How it's done:

The instrument operates about a force link that consists of three parallel rollers riding on axle pins mounted in two lateral support beams. The beams are reduced in cross section in the areas between center and outboard shaft mounting holes to more readily register stress in these sections in response to roller displacement. A strain gage is installed on one of the support beams to form a full Wheatstone bridge and thus eliminate errors due to uneven loading. Displacement in the rollers occurs when tension in a belt or strap, passing in conventional fashion through the rollers, forces the center roller in one direction and the outboard rollers in opposite direction to stress the support beam and unbalance the electrical output in the strain gage bridge.

Notes:

1. This method could be used to test various types of belts, straps, harnesses, etc. for load applications or to destruction.

(continued overleaf)

This document was prepared under the sponsorship of the National Aeronautics and Space Administration. Neither the United States Government nor any person acting on behalf of the United States Government assumes any liability resulting from the use of the information contained in this document, or warrants that such use will be free from privately owned rights.

2. Inquiries concerning this invention may be directed to:

Technology Utilization Officer
Manned Spacecraft Center
Houston, Texas 77058
Reference: B67-10242

Patent status:

Inquiries about obtaining rights for the commercial use of this invention may be made to NASA, Code GP. Washington, D.C. 20546.

Source: R. R. Walker
of North American Aviation, Inc.
under contract to
Manned Spacecraft Center
(MSC-921)

NASA TECH BRIEF

NASA Tech Briefs are issued to summarize specific innovations derived from the U.S. space program, to encourage their commercial application. Copies are available to the public at 15 cents each from the Clearinghouse for Federal Scientific and Technical Information, Springfield, Virginia 22151.

Improved Television Signal Processing System

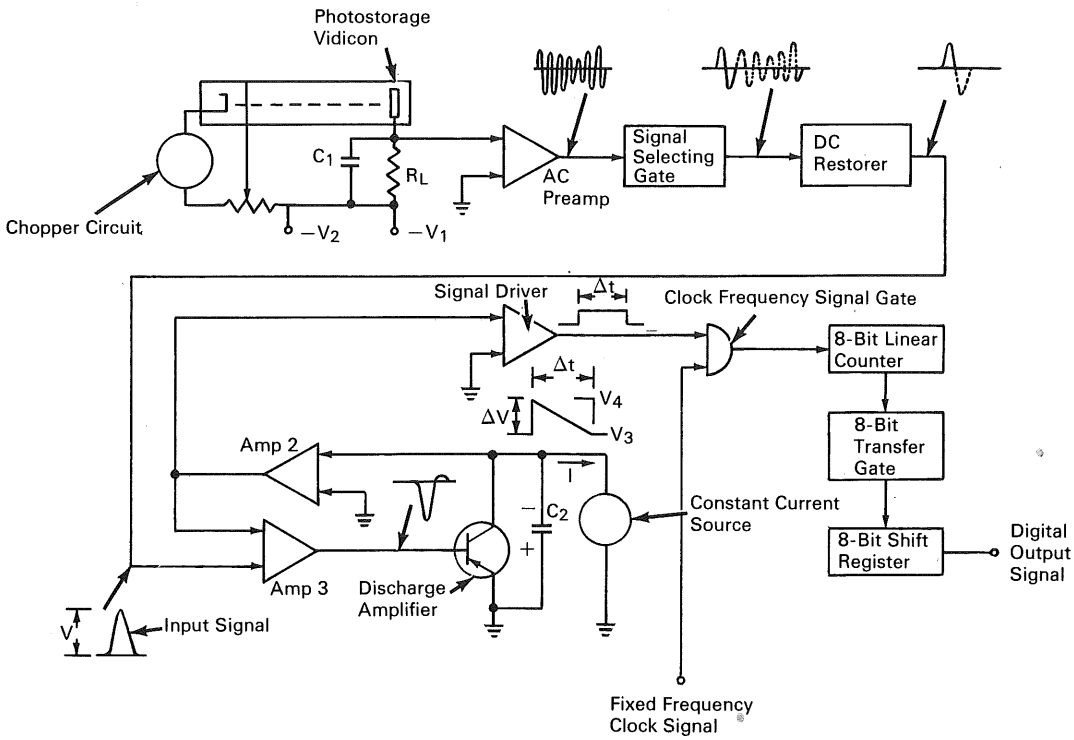

An improved digital system has been developed for processing spacecraft television pictures. In this system, the image sensed on a photostorage vidicon is digitized, ac-amplified, data-compressed, dc-restored, and then converted to pulses of width accurately proportional to signal amplitude. These pulses are used for gating a frequency-standard clock to a binary counter, which yields a count that is more accurately representative of camera signal levels. The counts are shifted serially, by transfer gate and register, into a magnetic tape recorder from which they are subsequently transmitted by telemetry at slow scan rates.

An illuminated pattern of the optical image of the subject is stored on the photostorage surface of the vidicon. The vidicon represents a constant current source that generates a video signal across a load impedance R_L. Capacitance C_1 represents the sum of the photostorage and other stray capacities. The video signal is obtained by scanning the photostorage surface with an electron scanning beam. V_1 is the voltage source supplying a current to generate the video

(continued overleaf)

This document was prepared under the sponsorship of the National Aeronautics and Space Administration. Neither the United States Government nor any person acting on behalf of the United States Government assumes any liability resulting from the use of the information contained in this document, or warrants that such use will be free from privately owned rights.

signal, and V_2 is the voltage source for generating the electron scanning beam. To obtain a signal of higher signal-to-noise ratio, the electron beam is chopped by the chopper circuit in the beam cathode return lead to turn the beam on and off at the rate of f_c times per second. Thus, the signal developed across the load resistor is an amplitude-modulated signal with a carrier frequency of f_c cycles per second. The light intensity of the illuminated image, therefore, contains in the envelope peaks of the carrier signal. The modulated signal is then amplified by the capacitor-coupled preamplifier, and the dc component of the signal is removed.

Because of the limited data storage capacity of the digital tape recorder that will store the video data, only the necessary minimal number of video signal cycles are processed and digitized so that an accurate reconstruction of the television pictures can be made. The signal selecting gate is used to select the desired signal cycle at a regular interval (for example, every 7th signal cycle). Each of the selected signal cycles is then dc-restored to its original photometric amplitude by the dc restorer.

The dc restored signal is converted to a time signal by the peak amplitude-to-time signal converter. The converter consists of amplifiers 2 and 3, a discharge amplifier, timing capacitor C_2, and a constant current source. The converter processes the input signal so that the timing capacitor C_2 is discharged by the discharge amplifier as the input signal reaches its peak. The net voltage $\Delta V = V_3 - V_4$, across C_2, as a result of the discharge, is equal to the peak of the input signal V, or $\Delta V = V$. As the input signal reaches its peak and begins to drop, C_2 begins to be recharged to its initial voltage level of V_3 by a constant current I from the constant current source. Therefore, the time, $\Delta t = (C_2/I)\Delta V$, for the timing capacitor to be fully recharged is proportional to the peak of the input signal. The signal driver is used to generate a gate signal whose pulse width is equal to the charging time Δt of capacitor C_2. The gate signal is then used to control the clock frequency signal gate so that the 8-bit linear counter can be used to count the number of clock frequency cycles during each gating. The resulting 8-bit linear word from the counter is used to provide 256 distinctive video photometric levels.

When each counting is completed, the content of the counter is transferred in parallel by the 8-bit transfer gate to the 8-bit shift register. The transferred content in the shift register is then shifted out to the digital recorder bit by bit in series for recording. While the content is being shifted out of the register, a new input signal can be digitized by the digitizing circuitry.

Notes:

1. This system may be applicable to the taking of pictures for processing by digital computer to enhance contrast and correct distortions in the pictures. An example of such application, in the processing of medical X-ray photographs, is described in NASA Tech Brief 67-10005. This system may also be useful in electron microscopy.
2. Inquiries concerning this invention may be directed to:

   Technology Utilization Officer
   NASA Pasadena Office
   4800 Oak Grove Drive
   Pasadena, California
   Reference: B67-10246

Patent status:

Inquiries about obtaining rights for the commercial use of this invention may be made to NASA, Code GP, Washington, D.C. 20546.

Source: Robert Y. Wong
Jet Propulsion Laboratory
(NPO-10140)

NASA TECH BRIEF

NASA Tech Briefs are issued to summarize specific innovations derived from the U.S. space program, to encourage their commercial application. Copies are available to the public at 15 cents each from the Clearinghouse for Federal Scientific and Technical Information, Springfield, Virginia 22151.

Rectilinear Display Gives Acceleration Load Factor and Velocity Information

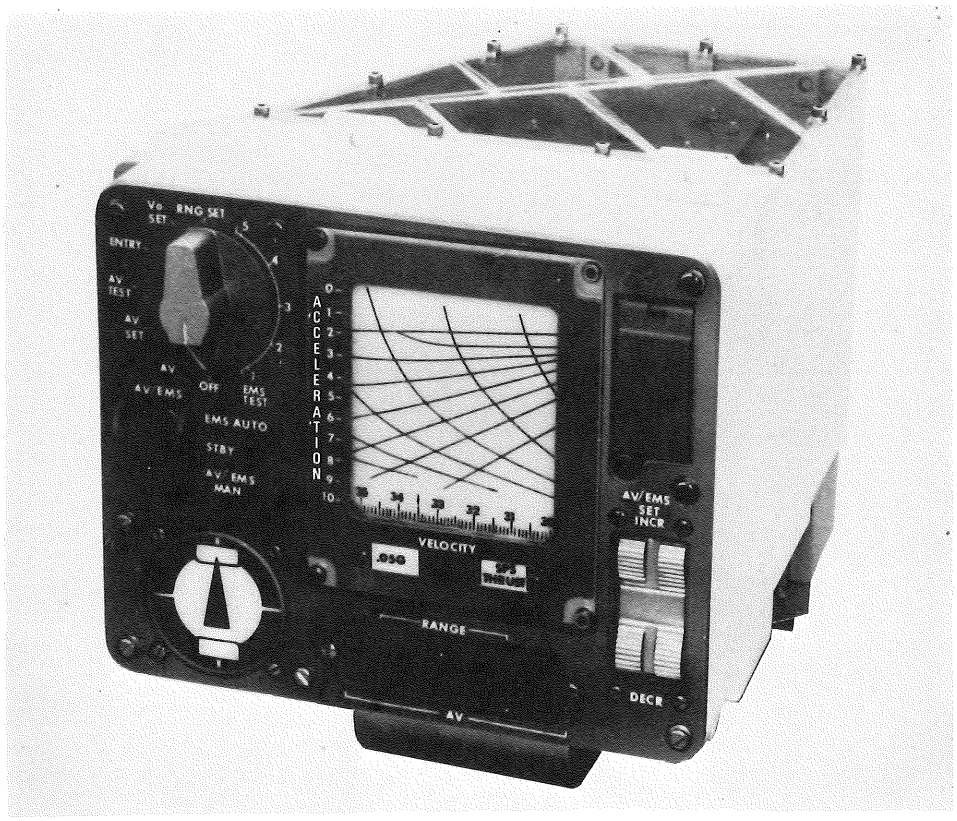

A spacecraft entry monitoring system (EMS) is developed to provide a rectilinear display of acceleration load factor and velocity information to which an astronaut may respond with manual spacecraft attitude corrective maneuver commands.

The display is derived from a commercially available tape that has a pattern corresponding to critical flight data imprinted on one side and an emulsion bonded to the other side. The tape is contained in a scroll-type assembly and is driven horizontally according to electrical inputs to the X-axis motor. A vertical device (Y-axis) is located at a point behind the tape on which a scribe is driven proportional to electrical inputs to the Y-axis motor. The scribe removes the emulsion from the tape to produce the X–Y trace as the tape translates in the X- (horizontal) direction and

(continued overleaf)

This document was prepared under the sponsorship of the National Aeronautics and Space Administration. Neither the United States Government nor any person acting on behalf of the United States Government assumes any liability resulting from the use of the information contained in this document, or warrants that such use will be free from privately owned rights.

the scribe moves in the Y- (vertical) direction.

Notes:

1. Application of this display technique is practically unlimited since it rectilinearly displays two variables. Nature of the variables impose no limitations so long as the axes of the display are properly driven. Criteria imprinted on the tape may be color coded if desired and their nature is limited only by the terms of the two variables used to drive the display axes. Because the display employs a scroll technique, criteria on the tape could include multiple variables and scalings, provided the inputs to the driven axes are compatible.
2. Inquiries concerning this invention may be directed to:

   Technology Utilization officer
   Manned Spacecraft Center
   Houston, Texas 77058
   Reference: B67-10248

Patent status:

Inquiries about obtaining rights for the commercial use of this invention may be made to NASA, Code GP, Washington, D.C. 20546.

Source: A. J. Frank and B. C. Johnson
of North American Aviation, Inc.
under contract to
Manned Spacecraft Center
(MSC-1045)

NASA TECH BRIEF

NASA Tech Briefs are issued to summarize specific innovations derived from the U.S. space program, to encourage their commercial application. Copies are available to the public at 15 cents each from the Clearinghouse for Federal Scientific and Technical Information, Springfield, Virginia 22151.

Computer Program Samples Digital Data for CRT Display

The problem:

To provide a high volume, multichannel data reduction program which permits selection of the rates at which data is sampled and prepared for display. The program must also permit accessibility to the original mass of data, e.g., commercial performance, failure analysis, experimental sources, or acceptance testing.

The solution:

A computer program written in the Fortran IV source language provides a data reduction method in which binary data, prerecorded on magnetic tape, may be selectively sampled and displayed on a CRT plot.

How it's done:

The program produces a complete graph by generating a series of frames which are displayed sequentially on a CRT. Each frame presents a segment of the horizontal axis as an extension in time of the previous frame, and will remain displayed on the CRT for a time interval as specified by the user. The input for the data reduction program is selectively sampled from magnetic tapes. These tapes contain the original data for other uses requiring accessibility to the entire block of data.

The programmer has under his control the selection of the data sampling rate, the point plot frequency and the number of channels to be graphed. Combinations of these variable rates are used to produce an output which contains only the desired amount of data. Through graphical representation of this data, the programmer may "map" together a graph which plots up to 5 channels simultaneously. Values for the first channel are plotted as dots; the second, plus signs; the third, asterisks; the fourth, crosses; and the fifth, zeroes.

Notes:

1. The program is restricted to (1) the use of not more than 5 curves per graph, and (2) not more than 2000 points plotted per channel per graph, i.e., 10,000 points per graph.
2. Inquiries concerning this invention may be directed to:

   COSMIC
   Computer Center
   The University of Georgia
   Athens, Georgia 30601
   Reference: B67-10249

Patent status:

Inquiries about obtaining rights for the commercial use of this invention may be made to NASA, Code GP, Washington, D.C. 20546.

Source: D. J. Day and W. H. Wickes
of North American Aviation, Inc.
under contract to
Manned Spacecraft Center
(MSC-999)

Category 01

This document was prepared under the sponsorship of the National Aeronautics and Space Administration. Neither the United States Government nor any person acting on behalf of the United States Government assumes any liability resulting from the use of the information contained in this document, or warrants that such use will be free from privately owned rights.

NASA TECH BRIEF

NASA Tech Briefs are issued to summarize specific innovations derived from the U.S. space program, to encourage their commercial application. Copies are available to the public at 15 cents each from the Clearinghouse for Federal Scientific and Technical Information, Springfield, Virginia 22151.

Experimental Coherent Fractional Frequency Multiplier at S-Band

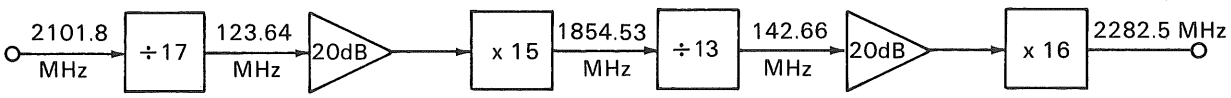

The problem:

To develop an efficient fractional frequency multiplier that will operate on a 5.6 mw, 2101.8 MHz input signal to achieve an output-to-input frequency ratio of 240/221.

The solution:

An experimental circuit employing step-recovery diodes in all frequency-changing stages (frequency division and harmonic generation) to obtain a desired coherent offset frequency by strictly harmonic and subharmonic operations. It is basically a system that phase-locks a derived frequency to the input frequency without servo loops. No oscillator stages are required, and the only power requirement of the system (other than the input signal) is less than 180 mw of dc to two transistor amplifiers operating at VHF.

How it's done:

The input frequency (2101.8 MHz) is divided by 17 in a single-stage step-recovery subharmonic generator, providing a 123.64 MHz signal. The amplified signal then passes to an X15 high-order step-recovery multiplier. The resulting 1854.53 MHz signal is divided by 13 to yield a 142.66 MHz signal. This signal is amplified and fed to an X16 multiplier, which provides the 2282.5 MHz output (at 4.3 mw) required to satisfy the output-to-input frequency ratio of 240/221.

The high-order step-recovery subharmonic generators each employ one idler circuit operating at the difference frequency between the input and output frequencies of the particular stage. The high-order multipliers are based on familiar circuitry involving no idler. Reentrant cavity filters and lumped-constant networks are used for matching and frequency selection. The entire system is capable of being frequency-modulated without loss of frequency-locking of the subharmonic and harmonic generator stages.

Note:

Inquiries concerning this invention may be directed to:

Technology Utilization Officer
Marshall Space Flight Center
Huntsville, Alabama 35812
Reference: B67-10250

Patent status:

Inquiries about obtaining rights for the commercial use of this invention may be made to NASA, Code GP, Washington, D.C. 20546.

Source: R. A. Mostrum
of Smith Electronics Inc.
under contract to
Marshall Space Flight Center
(M-FS-2427)

Category 01

This document was prepared under the sponsorship of the National Aeronautics and Space Administration. Neither the United States Government nor any person acting on behalf of the United States Government assumes any liability resulting from the use of the information contained in this document, or warrants that such use will be free from privately owned rights.

NASA TECH BRIEF

NASA Tech Briefs are issued to summarize specific innovations derived from the U.S. space program, to encourage their commercial application. Copies are available to the public at 15 cents each from the Clearinghouse for Federal Scientific and Technical Information, Springfield, Virginia 22151.

Solid State Phase Detector Replaces Bulky Transformer Circuit

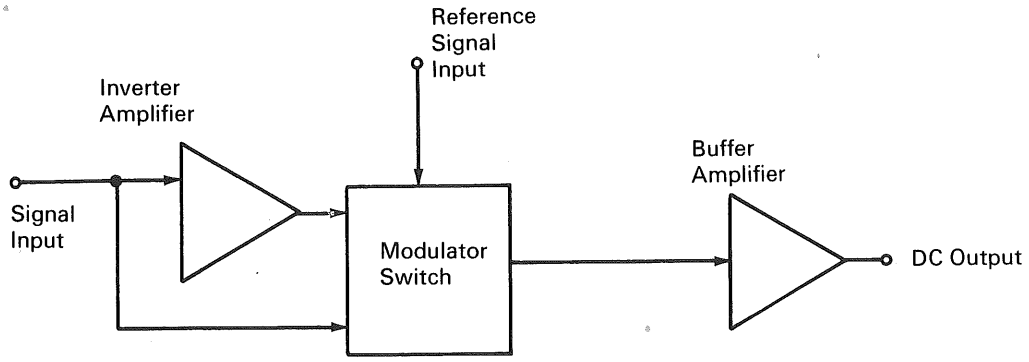

The problem:

To design a miniature phase detector to be used in a phase lock loop associated with a sub-bit detector in an integrated data-link circuit. The phase detector is to be used in lieu of a bulky transformer circuit commonly incorporated in phase lock loops. Input requirements are to be compatible with standard logic levels.

The solution:

A solid state phase detector employing MOSFET's (Metal Oxide Semiconductor Field Effect Transistors).

How it's done:

The solid state phase detector consists of an inverter amplifier, a modulator switch, and a buffer amplifier. The output of the inverter amplifier is a signal that is inverted (180 degrees out of phase) with respect to the input signal. The modulator switch performs a mixing function. It provides a signal of fixed amplitude but opposite polarity every half cycle at a rate determined by the reference switching frequency. This switching function is accomplished by two MOSFET's (in the modulator switch), one of which is connected to the input signal and the other to the inverted signal.

Note:

Inquiries concerning this invention may be directed to:

Technology Utilization Officer
Manned Spacecraft Center
Houston, Texas 77058
Reference: B67-10253

Patent status:

Inquiries about obtaining rights for the commercial use of this invention may be made to NASA, Code GP, Washington, D.C. 20546.

Source: C. L. Moberly
of Motorola Inc.
under contract to
Manned Spacecraft Center
(MSC-11007)

Category 01

This document was prepared under the sponsorship of the National Aeronautics and Space Administration. Neither the United States Government nor any person acting on behalf of the United States Government assumes any liability resulting from the use of the information contained in this document, or warrants that such use will be free from privately owned rights.

NASA TECH BRIEF

NASA Tech Briefs are issued to summarize specific innovations derived from the U.S. space program, to encourage their commercial application. Copies are available to the public at 15 cents each from the Clearinghouse for Federal Scientific and Technical Information, Springfield, Virginia 22151.

A Calibration Means for Spectrum Analyzers

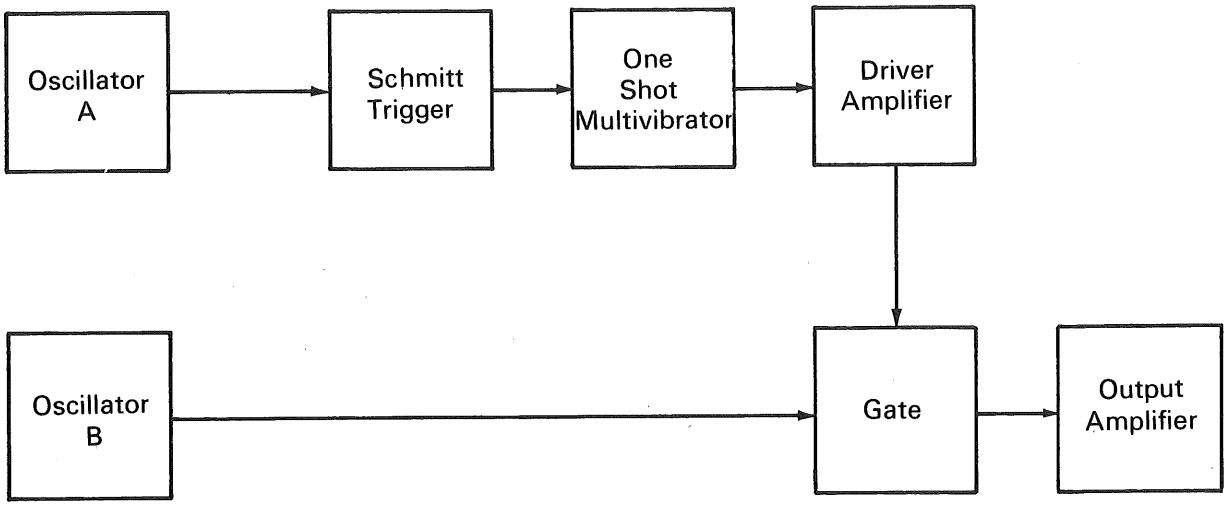

The problem:

To provide a means for rapid calibration of spectrum analyzers. Present methods use internal crystal-controlled markers at only one given frequency and spacing, thus limiting overall measurable accuracy. An external signal generator with a known frequency can be used but is very time consuming.

The solution:

A spectrum analyzer calibration system that is rapid and provides an accurate family of adjustable markers at any point in the spectrum.

How it's done:

Oscillator A drives the Schmitt trigger that in turn inhibits the one-shot multivibrator. The output pulse width is determined by selection of timing capacitors and a variable resistor, manually operated from a front panel. The one-shot multivibrator output is fed to a driver amplifier that in turn operates a gate that controls the signal supplied by oscillator B. The number of markers is determined by the pulse width controls and the unit will operate with a repetition rate from 300 cps to 40 kc at a center frequency from 10 kc to 2 Mc.

Notes:

1. Used as an airborne system, selective calibration of various spectral data could be readily accomplished by replacing the oscillators A and B with VCO's controlled by ground based telemetry.
2. Inquiries concerning this invention may be directed to:

   Technology Utilization Officer
   Manned Spacecraft Center
   Houston, Texas 77058
   Reference: B67-10254

(continued overleaf)

This document was prepared under the sponsorship of the National Aeronautics and Space Administration. Neither the United States Government nor any person acting on behalf of the United States Government assumes any liability resulting from the use of the information contained in this document, or warrants that such use will be free from privately owned rights.

Patent status:

Inquiries about obtaining rights for the commercial use of this invention may be made to NASA, Code GP, Washington, D.C. 20546.

Source: M. S. Larson
(MSC-10987)

NASA TECH BRIEF

NASA Tech Briefs are issued to summarize specific innovations derived from the U.S. space program, to encourage their commercial application. Copies are available to the public at 15 cents each from the Clearinghouse for Federal Scientific and Technical Information, Springfield, Virginia 22151.

Absolute Frequency Stabilization of Laser Oscillator Against Laser Amplifier

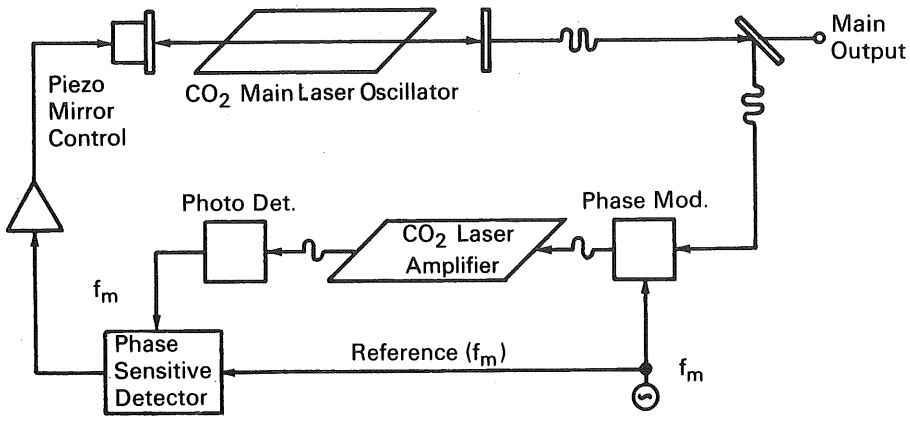

Long-term absolute frequency stabilization of a laser oscillator can be obtained if the laser's oscillation frequency is referenced to the exact center (or some other reproducible feature) of an atomic transition. Several techniques have been proposed and demonstrated for obtaining a discriminant, i.e., an error signal or other indication that the frequency of a laser deviates from the center of its atomic transition.

In the instant technique, a portion of the output of an unmodulated CO_2 laser oscillator is tapped off, frequency modulated at a frequency f_m, and passed through a reference CO_2 laser amplifier that is operated in a nonregenerative and unsaturated linear mode. If the main laser oscillation frequency or carrier frequency f_c coincides exactly with the amplifier's atomic line center f_a, then all sidebands of the frequency modulated signal will receive balanced amplification in the laser amplifier and there will be no fundamental-frequency FM–AM conversion in the amplifier. However, if the carrier frequency f_c deviates from the atomic line center f_a, then the FM sidebands will receive unbalanced amplification and there will be some FM–AM conversion in the amplifier. The amplifier output will then contain an AM component at the modulation frequency f_m, that can be detected by a photodetector following the laser amplifier.

The amplitude of this fundamental AM modulation component will vary linearly with frequency deviation $f_c - f_a$ over a reasonable range about line center. This component provides a useful discriminant or error signal to indicate frequency deviation from atomic line center. Correction of the main laser's oscillation frequency can then be achieved by standard feedback techniques using thermal, magnetorestrictive, or piezoelectric tuning.

In general, a strongly frequency modulated signal contains sidebands spaced by the modulation frequency f_m, and it could be expected that beating between these sidebands in a square-law photodetector would produce a strong beat note at f_m. No such beat

(continued overleaf)

This document was prepared under the sponsorship of the National Aeronautics and Space Administration. Neither the United States Government nor any person acting on behalf of the United States Government assumes any liability resulting from the use of the information contained in this document, or warrants that such use will be free from privately owned rights.

note is observed from a pure FM signal because the sideband phases and amplitudes are so delicately balanced that the beat components between all possible pairs of sidebands exactly cancel. However, passing the FM signal through the laser amplifier off line center, upsets the phase and amplitude balance, destroying the beat cancellation and producing a net observable beat.

Notes:

1. The gas fill, pressure, and pumping conditions of the reference laser amplifier can be adjusted for optimum frequency stability and reproducibility, while the same operating parameters in the main laser oscillator can be adjusted for maximum output power, efficiency, or other considerations, independent of frequency stability considerations.
2. Inquiries concerning this invention may be directed to:

   Technology Utilization Officer
   Marshall Space Flight Center
   Huntsville, Alabama 35812
   Reference: B67-10255

Patent status:

Inquiries about obtaining rights for the commercial use of this invention may be made to NASA, Code GP, Washington, D.C. 20546.

Source: A. E. Siegman
of Sylvania Electronic Systems
under contract to
Marshall Space Flight Center
(M-FS-2559)

NASA TECH BRIEF

NASA Tech Briefs are issued to summarize specific innovations derived from the U.S. space program, to encourage their commercial application. Copies are available to the public at 15 cents each from the Clearinghouse for Federal Scientific and Technical Information, Springfield, Virginia 22151.

Fast-Response Frequency-to-Analog Converter

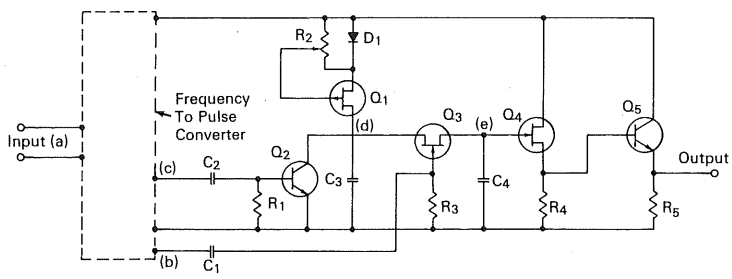

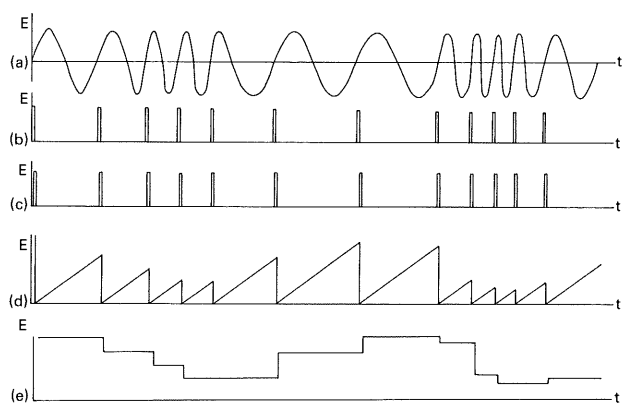

WAVEFORMS AT DESIGNATED POINTS ON CIRCUIT DIAGRAM

The problem:

To design a frequency-to-analog converter having a fast response time (equal to the period of the input signal) and a low ripple (no higher than 1 percent of reading).

The solution:

The circuit employs a frequency-to-pulse converter which provides two pulse trains, both at the same frequency as that of the input signal, but with a 10 microsecond difference between the trains. The pulses should have a duration of 5 to 10 microseconds and an amplitude of approximately 5 volts.

Pulse train (c) is coupled to transistor Q_2 through capacitor C_2. Capacitor C_3 is charged by the constant current network consisting of R_2, D_1, and Q_1. Potentiometer R_2 adjusts the charging current, and diode D_1 biases the FET (field effect transistor) Q_1. As transistor Q_2 is turned on by pulse train (c), capacitor C_3 discharges to zero potential. Between pulses, this capacitor is charged at constant current, resulting in a sawtooth waveform at (d) having a peak voltage that

(continued overleaf)

This document was prepared under the sponsorship of the National Aeronautics and Space Administration. Neither the United States Government nor any person acting on behalf of the United States Government assumes any liability resulting from the use of the information contained in this document, or warrants that such use will be free from privately owned rights.

is proportional to the period of the input frequency.

Pulse train (b) (which leads pulse train (c) by 10 microseconds) is coupled through C_1 to Q_3, a unipolar FET. A low-resistance path (approximately 600 ohms) is provided between C_3 and C_4 when Q_3 is turned "on" by pulse train (b). During the "off" time of Q_3, the resistance is approximately 150 megohms. Therefore, the potential difference between C_3 and C_4 will fall to zero when Q_3 is turned "on". Capacitor C_4 has a much smaller capacitance than C_3 to minimize any loading effect of C_4 on C_3 and also to reduce the time for potential equalization to less than 1 microsecond.

Transistor Q_3 is turned "on" at approximately the peak of a sawtooth, thereby charging C_4 to the peak sawtooth potential. The dc level (e) on C_4 is directly coupled to Q_4, an FET with an input impedance of approximately 10,000 megohms. Q_4 is placed in a source follower configuration for low output impedance. The output of Q_4 is in turn coupled into a common emitter configuration for even a lower output impedance (approximately 200 ohms).

The dc output voltage (maximum 20 volts at 1 cps) of the converter is inversely proportional to the input frequency. Its upper frequency limit is 5000 cps, with an output of approximately 5 millivolts. A dc voltage monitor can be coupled to the output and calibrated to read in cps.

Notes:

1. The frequency-to-pulse converter (shown as a dashed block) is of standard design.
2. This frequency-to-analog converter can be used to record small response changes in electrical output transducers. It can also be used as a low-frequency modulation detector.
3. Inquiries concerning this invention may be directed to:

   Technology Utilization Officer
   Marshall Space Flight Center
   Huntsville, Alabama 35812
   Reference: B67-10257

Patent status:

Inquiries about obtaining rights for the commercial use of this invention may be made to NASA, Code GP, Washington, D.C. 20546.

Source: Frank S. Hagihara
of North American Aviation, Inc.
under contract to
Marshall Space Flight Center
(M-FS-709)

NASA TECH BRIEF

NASA Tech Briefs are issued to summarize specific innovations derived from the U.S. space program, to encourage their commercial application. Copies are available to the public at 15 cents each from the Clearinghouse for Federal Scientific and Technical Information, Springfield, Virginia 22151.

A Piezo-Bar Pressure Probe

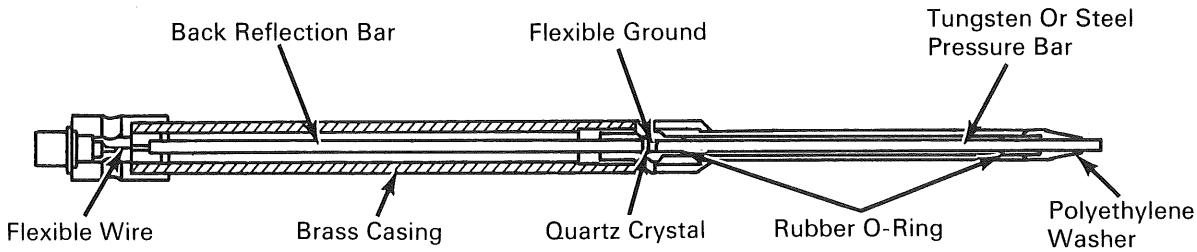

The problem:

To measure the impact velocity or pressure of a moving cloud consisting of a heterogeneous mixture of solid particles and gas molecules. When a high-speed pellet, propelled by a hot gas stream, strikes a thin sheet target, an impact cloud is generated. This gas/debris cloud results from the fragmentation of the solid components which in turn mix with the propelling gas stream. Such an expanding high velocity (of the order of 15 kilometers per second) cloud, consisting of very small particles associated with high-temperature gas is highly erosive; consequently, commercial piezoelectric transducers could not be expected to survive in such an environment.

The solution:

A piezo-bar pressure-type probe for measuring pressures up to 200,000 psi within the impact-generated debris cloud. Its construction is similar to that of other piezoelectric pressure-bar instruments. Peak pressures may be recorded with a total pulse duration between 5 and 65 μsec.

How it's done:

The pressure sensing elements of the probe, the pressure bar, the quartz crystal, and the back reflection bar are supported within a two-piece brass outer casing by polyethylene washers and rubber O-rings. The washers and O-rings provide radial support for the sensing elements plus electrical and acoustical isolation from the outer casing.

A pressure pulse incident on the measuring end of the bar causes a local strain (stress) that travels down the bar in the form of a wave at a velocity equal to the acoustic response of the bar. When this wave passes through the piezoelectric crystal element, it strains the element causing a signal to be generated in the form of an electrical charge. The magnitude of this charge is proportional to the magnitude of the pressure force exerted on the pressure bar and transmitted by it to the crystal element. The rear face of the back reflection bar is restrained axially by a light spring that permits essentially free axial motion of the sensing system. All of the momentum transferred to the pressure bar by the gas cloud is thereby retained in the bar/crystal system for a period greater than the useful linear response period of the probe.

Note:

Inquiries concerning this innovation may be directed to:

Technology Utilization Officer
Lewis Research Center
21000 Brookpark Road
Cleveland, Ohio 44135
Reference: B67-10259

(continued overleaf)

This document was prepared under the sponsorship of the National Aeronautics and Space Administration. Neither the United States Government nor any person acting on behalf of the United States Government assumes any liability resulting from the use of the information contained in this document, or warrants that such use will be free from privately owned rights.

Patent status:

No patent action is contemplated by NASA.

Source: W. H. Friend, C. L. Murphy,
and I. Shanfield
of McGill University
under contract to
Lewis Research Center
(Lewis-393)

AEC-NASA TECH BRIEF

AEC-NASA Tech Briefs describe innovations resulting from the research and development program of the U.S. AEC or from AEC-NASA interagency efforts. They are issued to encourage commercial application. Tech Briefs are published by NASA and may be purchased, at 15 cents each, from the Clearinghouse for Federal Scientific and Technical Information, Springfield, Virginia 22151.

Tester Automatically Checks Insulation of Individual Conductors in Multiple-Strand Cables

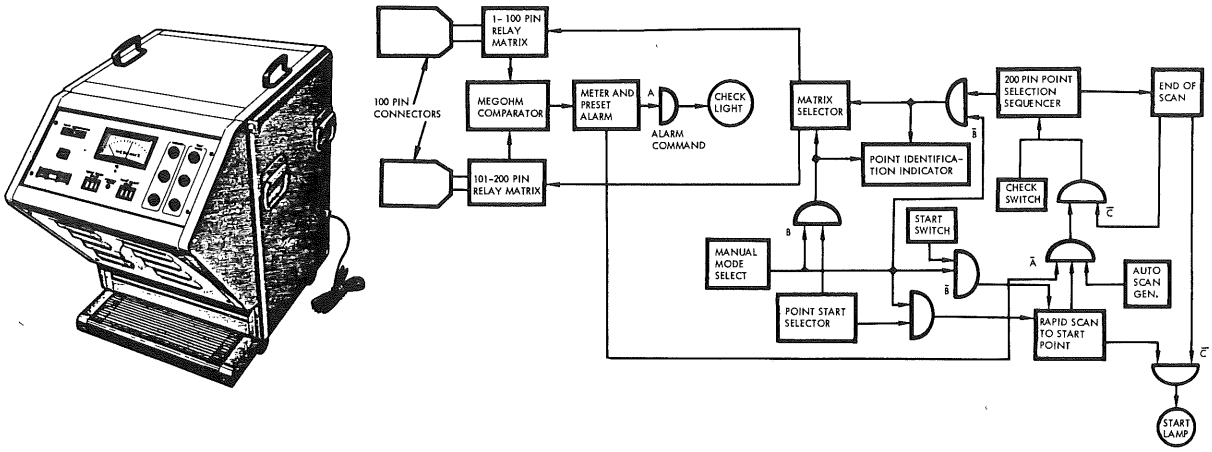

The problem:

The testing of nuclear rocket reactors requires the use of multiple-strand electrical cables for the connection of instruments, transducers, terminal boards, etc. The integrity of the insulation in each cable circuit must be checked periodically to ensure accurate test results. Manual checking is a tedious and time-consuming operation.

The solution:

A cable insulation tester with both manual and automatic capabilities that can check the insulation of each conductor in a multiple-strand cable containing up to 200 or more conductors in a few minutes.

How it's done:

The cable insulation tester consists of two relay matrices, a combination megohm and low alarm comparator, and associated readout and control systems. The comparator consists of a regulated dc power supply with outputs of 10, 50, or 500 volts, a set of ranging precision resistors, and a transistorized meter amplifier. An optical meter relay performs both the functions of resistance value readout and alarm. The unit has two modes of operation: manual and automatic.

In the manual mode, any one pin may be selected by dialing the corresponding number on the point switch located on the control panel. This activates the corresponding matrix relay. The point under test then appears on the point identification indicator, and its resistance, in relation to the other pins, is displayed on the ohmmeter.

In the automatic mode of operation, each pin within the preselected interval is subsequently referenced to all other pins which are grounded. If the resistance value falls below a preset resistance value, the scan is stopped by the comparator at the alarm point, a lamp in the check switch is lighted, and the point identification indicator displays the pin number in question.

(continued overleaf)

This document was prepared under the sponsorship of the Atomic Energy Commission and/or the National Aeronautics and Space Administration. Neither the United States Government nor any person acting on behalf of the United States Government assumes any liability resulting from the use of the information contained in this document, or warrants that the use of any information, apparatus, method, or process disclosed in this document may not infringe privately owned rights.

When the switch is depressed, the scan continues from the pin following the alarmed pin until either another alarmed pin or the end of the scan is reached.

Notes:

1. The tester can check 200 pins directly, or more by the use of suitable adapters, if required. The instrument is compact, portable, mounted on wheels, and operates on 115 volt, 60 cycle power.
2. Inquiries concerning this innovation may be directed to:

   AEC–NASA Space Nuclear Propulsion Office
   U.S. Atomic Energy Commission
   Washington, D.C. 20545
   Reference: B67-10260

Patent status:

No patent action is contemplated by AEC or NASA.

Source: Michael Vuckovich and Jack Shaw of the Westinghouse Astronuclear Laboratory under contract to Space Nuclear Propulsion Office (NUC-10068)

NASA TECH BRIEF

NASA Tech Briefs are issued to summarize specific innovations derived from the U.S. space program, to encourage their commercial application. Copies are available to the public at 15 cents each from the Clearinghouse for Federal Scientific and Technical Information, Springfield, Virginia 22151.

An Efficient, Temperature-Compensated Subcarrier Oscillator

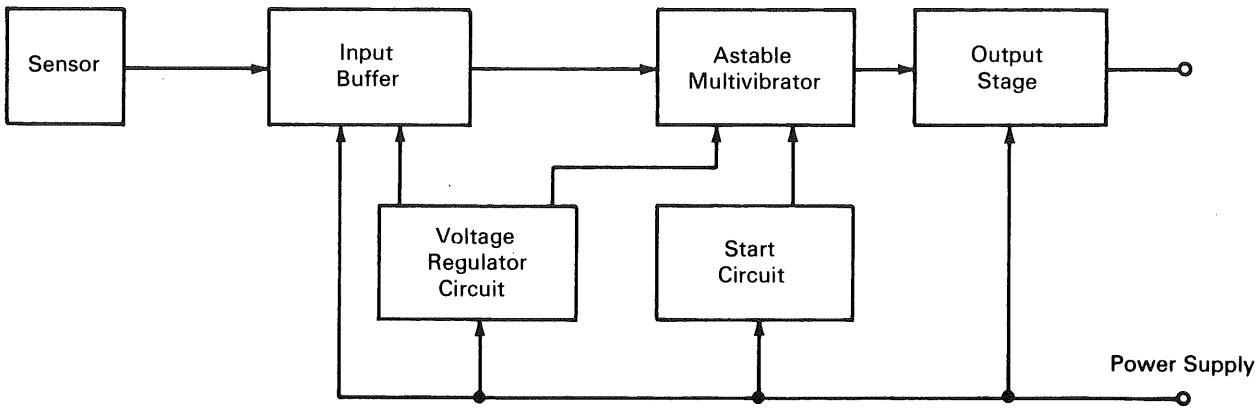

The problem:

To design a temperature-compensated telemetry subcarrier oscillator whose output frequency will be an essentially linear function of the magnitude of an input signal from a sensor. In addition to the requirement for temperature stability, the oscillator must consume a minimum of power and have a high input impedance.

The solution:

A circuit employing an input buffer with a field effect transistor which effectively serves as a solid state temperature-compensating element.

How it's done:

The subcarrier oscillator includes an astable multivibrator consisting of a pair of regeneratively coupled transistors and an input buffer which provides temperature-compensated base voltage to the transistors as a function of the input signals from the sensor.

The input buffer includes a field effect transistor whose gate electrode is coupled to the input signal from the sensor and whose source electrode is coupled to the base electrodes of the multivibrator transistors. The drain electrode of the field effect transistor is connected to an adjustable drain-current-control circuit. This circuit is adjusted to compensate for the collector-emitter saturation voltage variations of the multivibrator as well as for any mismatch in buffer-component temperature coefficients. The input buffer also includes transistorized circuitry which provides the high input impedance for the subcarrier oscillator. The voltage regulator ensures temperature-compensated collector voltage to the multivibrator transistors.

Note:

Inquiries concerning this invention may be directed to:

Technology Utilization Officer
NASA Pasadena Office
4800 Oak Grove Drive
Pasadena, California 91103
Reference: B67-10251

(continued overleaf)

This document was prepared under the sponsorship of the National Aeronautics and Space Administration. Neither the United States Government nor any person acting on behalf of the United States Government assumes any liability resulting from the use of the information contained in this document, or warrants that such use will be free from privately owned rights.

Patent status;

This invention has been patented by NASA (U.S. Patent No. 3,325,749), and royalty-free license rights will be granted for its commercial development. Inquiries about obtaining a license should be addressed to NASA, Code GP, Washington, D.C. 20546.

Source: E. D. Lawrence and D. C. Mead
of Hughes Aircraft Co.
under contract to
Jet Propulsion Laboratory
(JPL-SC-091)

NASA TECH BRIEF

NASA Tech Briefs are issued to summarize specific innovations derived from the U.S. space program, to encourage their commercial application. Copies are available to the public at 15 cents each from the Clearinghouse for Federal Scientific and Technical Information, Springfield, Virginia 22151.

Multichannel Pulse Height Analyzer Is Inexpensive, Features Low Power Requirements

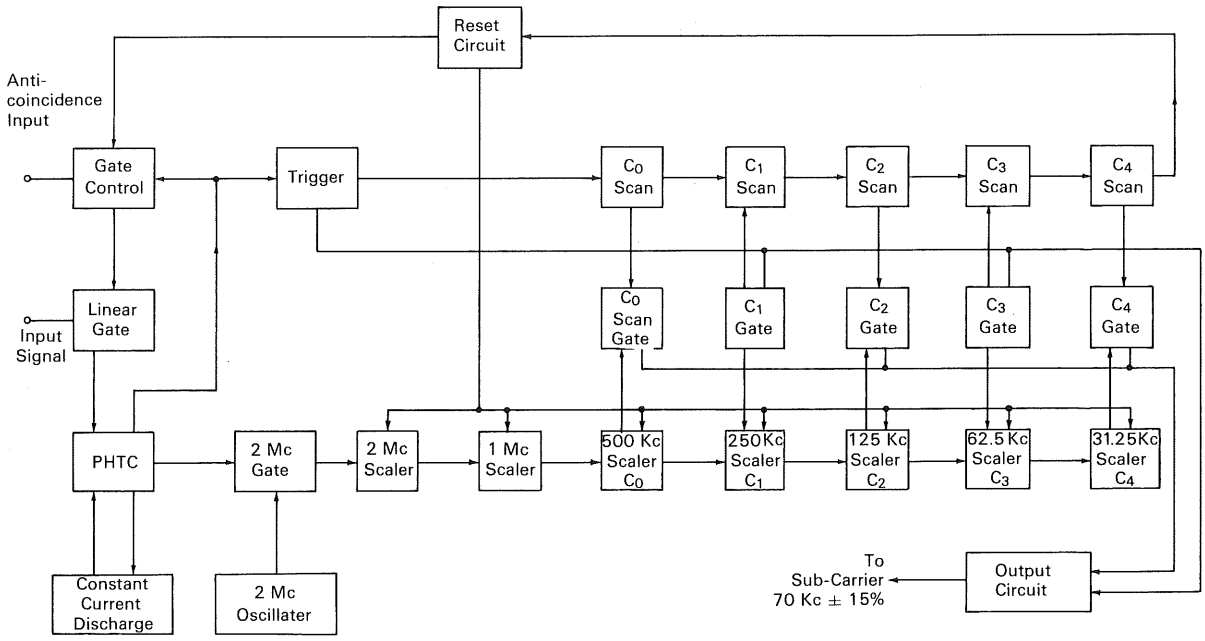

The problem:

To design a simple, low cost, low power consumption multichannel pulse height analyzer for balloon and rocket investigation of solar neutrons with energies greater than 10 Mev. Commercially available analyzers are prohibitive in cost for modest investigation programs, and present volume and weight problems in these applications.

The solution:

A pulse height analyzer flight unit costing approximately $350 (exclusive of labor) and weighing about 4-1/2 pounds. The unit can operate in a temperature range of −30° to +70°C and withstand storage temperatures from −50° to +90°C.

How it's done:

The device is essentially a pulse height-to-series binary converter. The signal input is fed through a linear gate to a pulse height-to-time converter circuit (PHTC) where the pulse height spectrum is converted to a time spectrum by charging a capacitor to the peak voltage of the input pulse, and then linearly discharging the capacitor through a constant current source. The PHTC output is a positive pulse referred to as the "T pulse", whose duration, which is proportional to

(continued overleaf)

This document was prepared under the sponsorship of the National Aeronautics and Space Administration. Neither the United States Government nor any person acting on behalf of the United States Government assumes any liability resulting from the use of the information contained in this document, or warrants that such use will be free from privately owned rights.

the amplitude of the input pulse, gates on a 2 Mc oscillator that in turn feeds a seven-stage cascaded binary counter. The counter register stores a binary number equivalent to the pulse height input. Analysis of the maximum input pulse (3v) requires 64 μsec.

Upon input pulse termination (approximately 1.5μsec) the linear gate is closed for 600μsec by the gate control and a 100μsec trigger pulse is generated. Thus the pulse height-to-time conversion is completed before the trigger pulse terminates, and the "scan" is generated as soon as the trigger pulse is terminated. The "scan" circuits are monostables that sequentially generate 100μsec pulses and search the outputs of the scalers. If a scaler is left in a "one" state, the scan pulse will pass through a diode "and" gate and be fed to the output circuit. The sequential scan circuits are C_0, C_1, C_2, C_3, and C_4. When the C_4 scan pulse is completed, a gate trigger is generated to reopen the linear gate and reset all scalers within 1μsec of linear gate reopening. Since the scalers do not operate until the input pulse terminates (1.5μsec), the system can analyze an input pulse as soon as the linear gate opens. Thus each pulse requires 600μsec to analyze and the average repetition rate capability of the analyzer is 1667 pps.

While the circuit contains 7 scalers, only 5 are used to obtain the binary output. The two additional scalers permit conversion from 32 to 128 channels and lessen ambiguity between adjacent channels. Such ambiguity is inherent when a continuous running oscillator is "gated" on where the gating is not synchronized, and is intolerable when the device is used as a 32-channel pulse height analyzer.

An anticoincidence unit is provided that can be used to gate off unwanted pulses before they reach the PHTC. The anticoincidence pulse would be +5v and precede the input signal by at least 0.25μsec. This input can also be used for upper level discrimination if an additional discriminator is added to the circuitry. When pulse height-to-binary conversion is completed, the information is fed to an FM–FM telemetry system. The telemetered binary number consists of a series of bipolar square waves preceded by a positive trigger pulse as shown in the lower figure. The trigger pulse synchronizes the ground circuits and C_0 through C_4 represent bits 1 through 5, respectively. The bipolar pulses are 100μsec wide so they may be transmitted on a subcarrier with a total bandwidth of 20 kc.

Note:

Inquiries concerning this invention may be directed to:

Technology Utilization Officer
Headquarters
National Aeronautics and Space Administration
Washington, D.C. 20546
Reference: B67-10258

Patent status:

Inquiries about obtaining rights for the commercial use of this invention may be made to NASA, Code GP, Washington, D.C. 20546.

Source: C. J. Ewald and A. A. Sarkady
of The University of New Hampshire
under contract to
NASA Headquarters
(HQN-10020)

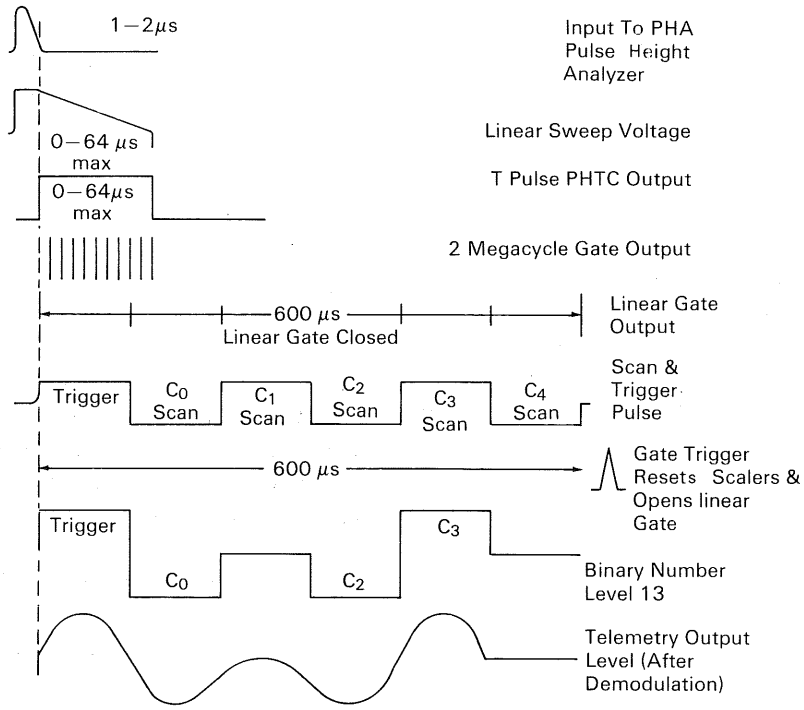

AEC-NASA TECH BRIEF

AEC-NASA Tech Briefs describe innovations resulting from the research and development program of the U.S. AEC or from AEC-NASA interagency efforts. They are issued to encourage commercial application. Tech Briefs are published by NASA and may be purchased, at 15 cents each, from the Clearinghouse for Federal Scientific and Technical Information, Springfield, Virginia 22151.

Solid State Circuit Averages Multiple Signals and Rejects Those Varying Significantly from the Average

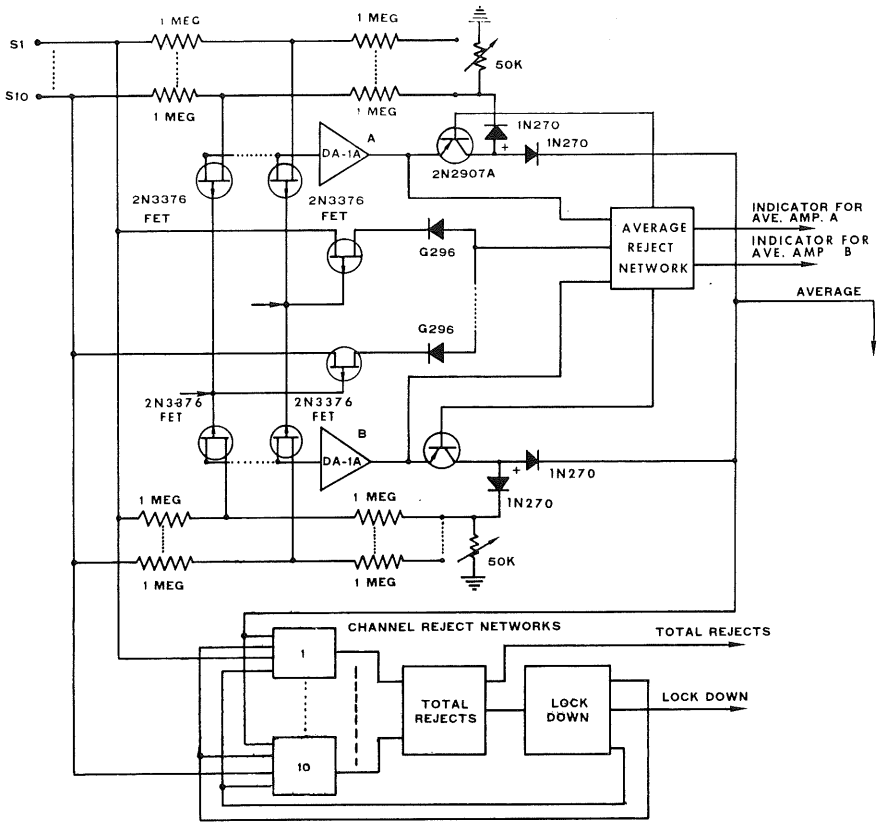

The problem:

To devise an average and reject logic control system that provides an average of the output signals of up to ten transducers measuring critical parameters such as temperature and pressure.

The solution:

A circuit that compares each signal against an average, rejects any signal that departs significantly from the average, and supples an average of the acceptable signals.

How it's done:

The system is a 0–10 volt system utilizing ten input channels. Two averaging amplifiers operate redundantly to average the channel inputs and feed the resultant signal into ten channel reject networks. Each channel reject network compares its signal with the

(continued overleaf)

This document was prepared under the sponsorship of the Atomic Energy Commission and/or the National Aeronautics and Space Administration. Neither the United States Government nor any person acting on behalf of the United States Government assumes any liability resulting from the use of the information contained in this document, or warrants that the use of any information, apparatus, method, or process disclosed in this document may not infringe privately owned rights.

average signal. If the channel output varies by a predetermined amount from the average, the channel reject network generates a reject signal that disconnects this channel from the circuit. In addition, it is possible to manually reject any channel. The selected outputs of the individual reject networks are then fed into a "total reject network" where they are compared against a manually selected limit. When the number of channels rejected is equal to the manually selected limit, a lock-down signal is generated which automatically prevents the rejection of any additional channels. Visual indication can be provided to show the number of channels rejected before lock-down.

The output of each averaging amplifier is fed to an "average reject network" for comparison with the highest signal coming from the ten channels. If the output of either averaging amplifier exceeds the value of the highest signal, then the network disconnects that amplifier from the load by turning off the transistor in series with it. An indicator light is activated to show that the amplifier is disconnected.

Notes:

1. This system is of particular value where high reliability is important.
2. Inquiries concerning this innovation may be directed to:

   Technology Utilization Officer
   AEC–NASA Space Nuclear Propulsion Office
   U.S. Atomic Energy Commission
   Washington, D.C. 20545
   Reference: B67-10262

Patent status:

No patent action is contemplated by AEC or NASA.

Source: R. A. Elmiger
of the Westinghouse Astronuclear Laboratory
under contract to
Space Nuclear Propulsion Office
(NUC-10066)

AEC-NASA TECH BRIEF

AEC-NASA Tech Briefs describe innovations resulting from the research and development program of the U.S. AEC or from AEC-NASA interagency efforts. They are issued to encourage commercial application. Tech Briefs are published by NASA and may be purchased, at 15 cents each, from the Clearinghouse for Federal Scientific and Technical Information, Springfield, Virginia 22151.

Automated Tester Permits Precise Calibration of Pressure Transducers from 0 to 1050 psi

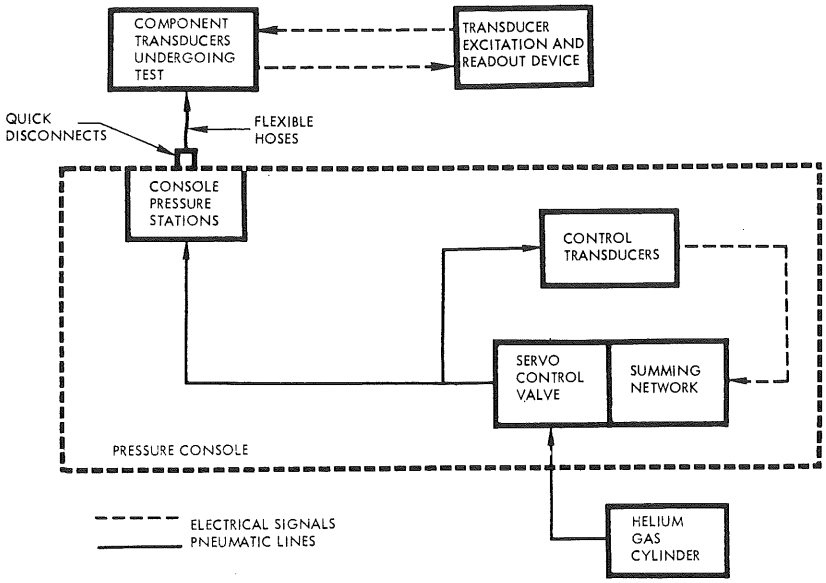

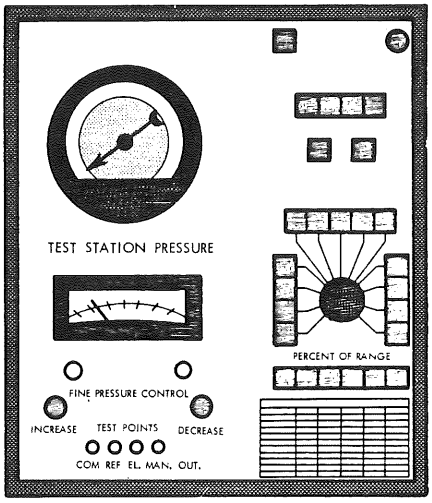

The problem:

During the testing of the nuclear rocket engine many pressure transducers are required to control and monitor the performance of the engine. It is necessary to calibrate these transducers immediately prior to an actual test run. This generated the need for a portable, accurate, fast, reliable pressure transducer checker.

The solution:

An automated portable transducer checker consisting of a pressure console and equipment capable of producing test pressures of 0–1050 psi. The console can be interconnected to other equipment required for measurement and visual display of the electrical output of the transducers undergoing test.

How it's done:

The pressure transducers undergoing calibration are connected by flexible hoses to quick disconnect pressure stations mounted on the rear of the console. The console is connected to a 2000 psi helium gas cylinder which provides the desired test pressure over the range of 0–1050 psi.

Two sets of pushbuttons are located on the console panel by which the tester can be set to supply any desired pressure in the range of 0–1050 psi. A table printed on the console face gives settings required in terms of any desired pressure.

(continued overleaf)

This document was prepared under the sponsorship of the Atomic Energy Commission and/or the National Aeronautics and Space Administration. Neither the United States Government nor any person acting on behalf of the United States Government assumes any liability resulting from the use of the information contained in this document, or warrants that the use of any information, apparatus, method, or process disclosed in this document may not infringe privately owned rights.

The checker utilizes a servo control valve and a summing network to provide the exact pressure desired to the transducer undergoing test.

An electric motor-driven vacuum pump permits testing with an absolute reference point. The pump has a capacity of 21 liters/minute and can evacuate the system to less than 28 inches of mercury. Output of the transducers undergoing test can be shown on a strip recorder or other types of display equipment. Controls on the pressure console provide an accuracy within ±0.05 percent of actual pressure.

Note:

Inquiries concerning this innovation may be directed to:

Technology Utilization Officer
AEC–NASA Space Nuclear Propulsion Office
U.S. Atomic Energy Commission
Washington, D.C. 20545
Reference: B67-10263

Patent status:

No patent action is contemplated by AEC or NASA.

Source: John Brinda, Jack Shaw, Louis Kristoff, and Michael Vuckovich of the Westinghouse Astronuclear Laboratory under contract to Space Nuclear Propulsion Office (NUC-10067)

NASA TECH BRIEF

NASA Tech Briefs are issued to summarize specific innovations derived from the U.S. space program, to encourage their commercial application. Copies are available to the public at 15 cents each from the Clearinghouse for Federal Scientific and Technical Information, Springfield, Virginia 22151.

Tester Automatically Checks Paper Tape Punch and Reader After Maintenance

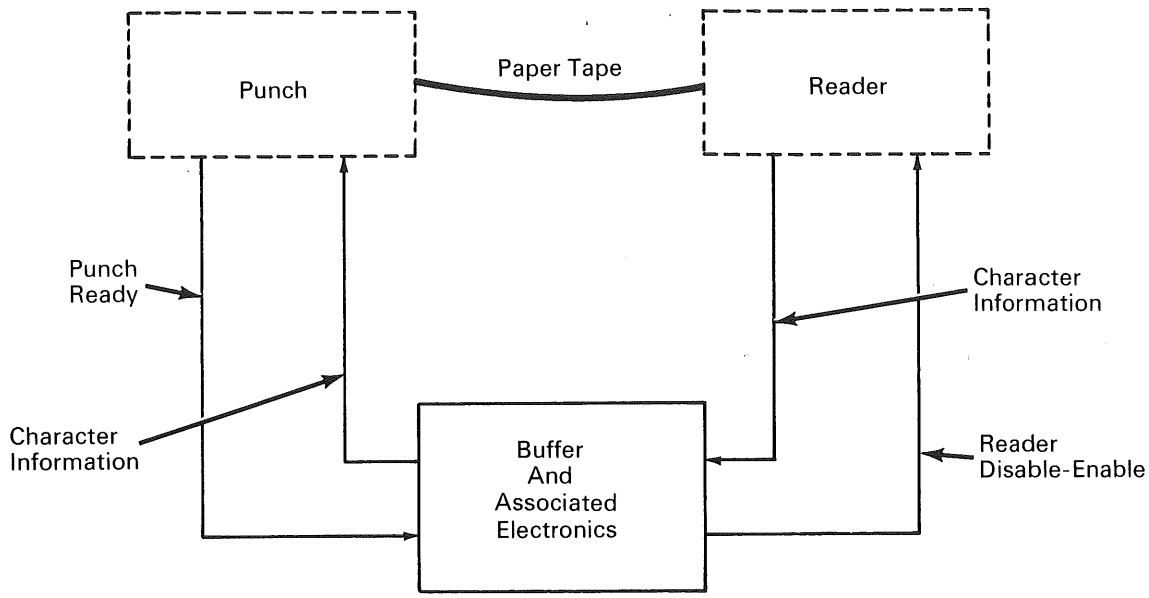

The problem:

To develop a device for bench testing paper tape punches and readers under conditions that simulate their actual in-service operating environment. This device should be relatively simple and provide an automatic method for continuously checking a punch and reader following routine maintenance.

The solution:

Operate the reader and punch back-to-back and let the paper tape output of the punch feed the reader. The leader of the tape is prepunched with an arbitrary pattern that is continuously reproduced during the check. An error that occurs at any time is continuously propagated.

How it's done:

Any pattern of codes is prepunched on the tape, the length of the pattern exceeding the distance between punch and reader to prevent "tight tape" to allow continuous operation. Each character read by the reader causes the same character to be recorded by the punch. The 1-character buffer is used when the punch and reader operate at different synchronous speeds. In this case, the buffer stores the character for the time necessary to allow the effective reading rate to be equal to the punching rate in order to maintain slack tape between the punch and reader. With this closed loop operation, an error that occurs at any time is continuously propagated. Therefore, by

(continued overleaf)

This document was prepared under the sponsorship of the National Aeronautics and Space Administration. Neither the United States Government nor any person acting on behalf of the United States Government assumes any liability resulting from the use of the information contained in this document, or warrants that such use will be free from privately owned rights.

observing the pattern that is being punched at any time, one may determine if any errors have occurred from the start of the test. If desired, a parity check bit may be used to allow stopping the operation whenever an error is detected.

Note:

Inquiries concerning this innovation may be directed to:

Technology Utilization Officer
Ames Research Center
Moffett Field, California 94035
Reference: B67-10267

Patent status:

No patent action is contemplated by NASA.

Source: D. D. McMurchy and L. Mazer
(ARC-66)

NASA TECH BRIEF

NASA Tech Briefs are issued to summarize specific innovations derived from the U.S. space program, to encourage their commercial application. Copies are available to the public at 15 cents each from the Clearinghouse for Federal Scientific and Technical Information, Springfield, Virginia 22151.

Self-Balancing Line-Reversal Pyrometer Automatically Measures Gas Temperatures

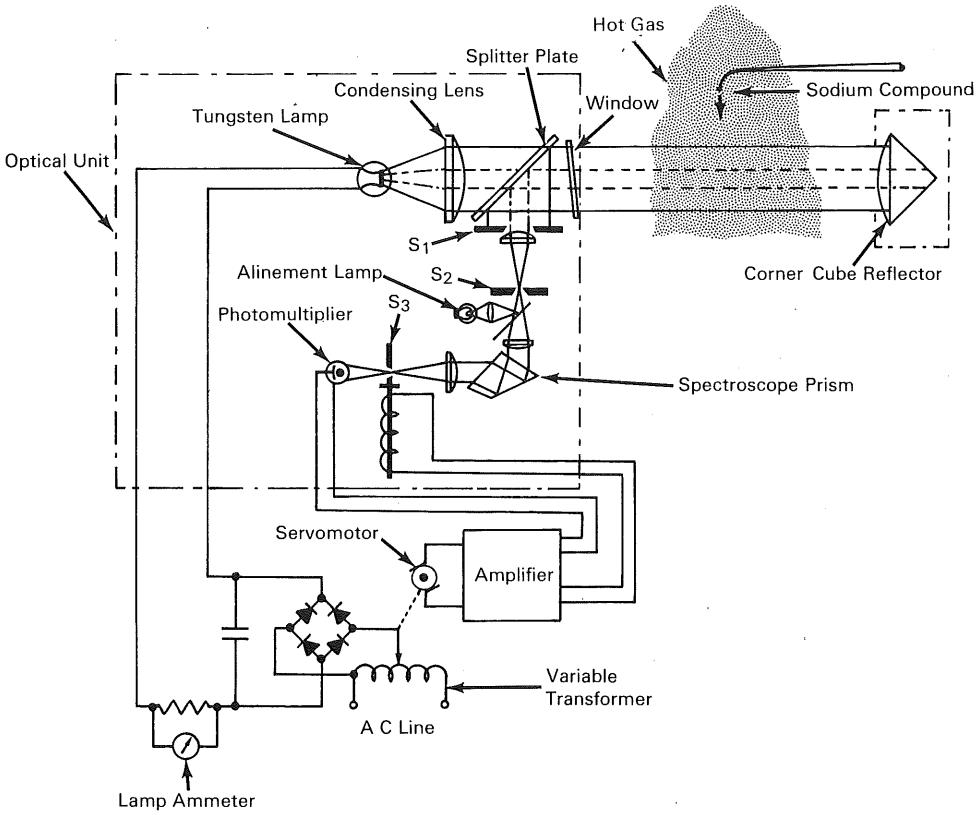

The problem:

To develop an automatic line-reversal pyrometer for measurement of gas temperatures in the range of 2900° to 4500°R. Conventional line-reversal (sodium D-line) pyrometers that have been used for measurement of gas temperatures require critical optical alinement of the reversal point by a skilled technician to achieve reliable results.

The solution:

A self-balancing line-reversal pyrometer (using the sodium D-line) that replaces the two conventional manual operations of the line-reversal method: namely, observing the spectral line through a spectroscope and controlling the lamp current to produce reversal. The self-balancing pyrometer can be used in the field by semiskilled personnel.

(continued overleaf)

This document was prepared under the sponsorship of the National Aeronautics and Space Administration. Neither the United States Government nor any person acting on behalf of the United States Government assumes any liability resulting from the use of the information contained in this document, or warrants that such use will be free from privately owned rights.

How it's done:

The instrument consists of an enclosed optical unit alined with a corner-cube reflector; a probe that injects a powdered sodium compound into the hot gas at an upstream point; and an electrical unit containing a self-balancing system, which adjusts the current through the tungsten ribbon-filament lamp in the optical unit to restore the state of reversal of the sodium D-line, and an ammeter which continuously monitors the lamp current, related to the gas temperature by a previous calibration. An alinement lamp and small mirror are built into the optical unit to enable precise alinement of the optical axes of the tungsten lamp and the corner reflector before the instrument is used for measuring gas temperatures.

The spectroscope prism receives light from both the hot gas (seeded with an appropriate sodium compound) and the lamp through aperture S_1 and entrance slit S_2. Slit S_3 vibrates sinusoidally at a 60 Hz frequency and is positioned along the continuum (continuous spectrum from the lamp) to transmit light to the photomultiplier from the sodium D- spectral line at the slit center position, from a shorter adjacent wavelength in the continuum (at one extreme position of the slit), and from a longer adjacent wavelength in the continuum (at the other extreme position of the slit). Flux from the spectral line is compared alternately with flux from the two adjacent wavelengths during each vibration cycle of the slit. When the spectral line is not at reversal (spectral line brightness does not match the continuum brightness), a difference of light flux between the spectral line and the adjacent wavelengths generates a 120 Hz signal. The signal is transmitted from the photomultiplier to the amplifier, servomotor, and variable transformer, which then adjusts the tungsten lamp current to establish the state of line reversal. At line reversal the lamp temperature is uniquely related to the gas temperature when thermal equilibrium exists between the gas and the atoms of the injected sodium compound. The lamp calibration data then gives the gas temperature in terms of the lamp ammeter reading.

Notes:

1. The upper limit of temperature set by the tungsten lamp at 4500°R can be extended to 6500°R by use of a carbon arc source and absorption wedges to control the intensity of the transmitted light.
2. Inquiries concerning this innovation may be directed to:

   Technology Utilization Officer
   Lewis Research Center
   21000 Brookpark Road
   Cleveland, Ohio 44135
   Reference: B67-10268

Patent status:

No patent action is contemplated by NASA.

Source: Donald Buchele
(Lewis-348)

NASA TECH BRIEF

NASA Tech Briefs are issued to summarize specific innovations derived from the U.S. space program, to encourage their commercial application. Copies are available to the public at 15 cents each from the Clearinghouse for Federal Scientific and Technical Information, Springfield, Virginia 22151.

Oscilloscope Used as X-Y Plotter or Two-Dimensional Analyzer

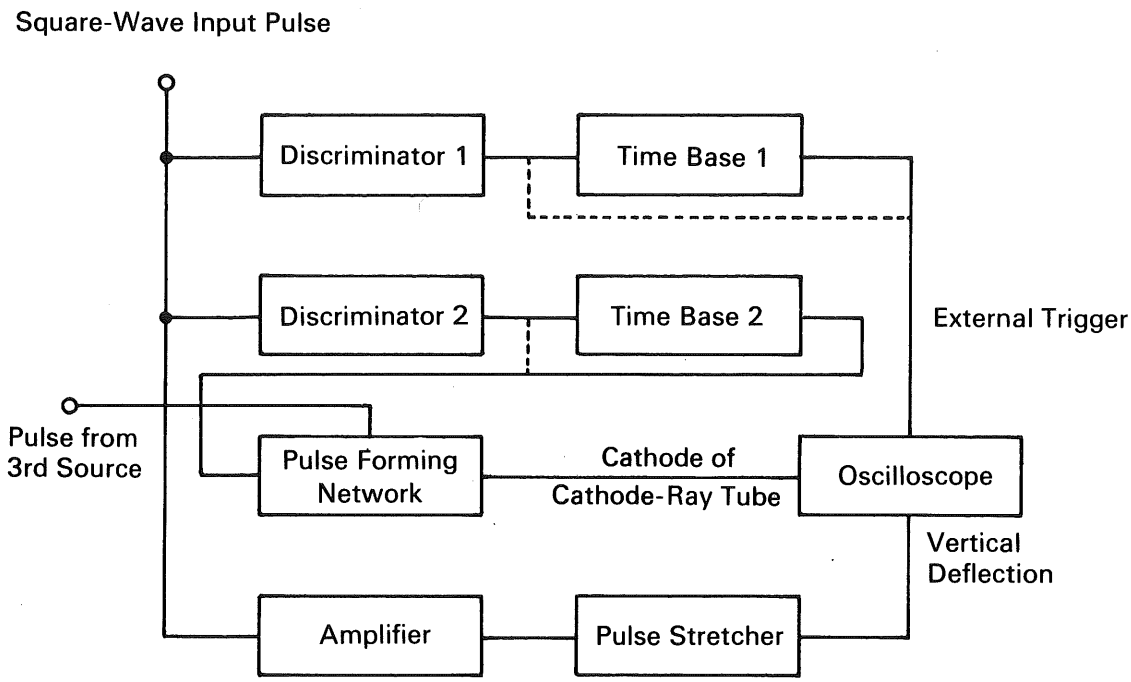

An oscilloscope has been used as an X-Y plotter or two-dimensional analyzer with the capacity of tagging each point with a "yes" or "no", depending on a third parameter. A square-wave pulse that would normally appear on the scope is replaced by a single dot that appears at a point related to the amplitude and horizontal position of the trailing edge of the input square wave. The electronics design is such that the information-bearing dot lengthens to a dash in response to a second, and simultaneously occurring event. The length of this dash is adjustable relative to the sweep rate of the oscilloscope.

In operation, a square-wave pulse in a 50-ohm transmission line is applied to discriminator 1. Input to all the components in the diagram exhibits a very high input impedance level compared to 50 ohms. Discriminator 1 fires at a selected level on the leading edge of the input pulse and triggers time base 1. Discriminator 2 and time base 2 perform similarly but in response to a selected level on the trailing edge of the input pulse. Output of time base 1 triggers the oscilloscope sweep circuit while output of time base 2 triggers a pulse forming network that pulses the oscilloscope tube cathode. Should a pulse from a third

(continued overleaf)

This document was prepared under the sponsorship of the National Aeronautics and Space Administration. Neither the United States Government nor any person acting on behalf of the United States Government assumes any liability resulting from the use of the information contained in this document, or warrants that such use will be free from privately owned rights.

source appear at the second input to the pulse forming network, the pulse applied to the cathode by time base 2 is lengthened by some adjustable amount. Following routing to the discriminators, the input pulse is applied to an amplifier and terminated in a 50-ohm load. Output of the amplifier is fed to a pulse stretcher having a time constant quite long compared to the oscilloscope sweep rate. The stretched pulse is applied to the vertical deflection circuit of the oscilloscope.

Notes:

1. When recorded photographically, the amount of data that can be distinguished per photograph is increased by at least two orders of magnitude over previous methods.
2. Inquiries concerning this innovation may be directed to:

   Technology Utilization Officer
   Lewis Research Center
   21000 Brookpark Road
   Cleveland, Ohio 44135
   Reference: B67-10269

Patent status:

No patent action is contemplated by NASA.

Source: David Hansen and Neal Roy
of TRW Incorporated
under contract to
Lewis Research Center
(Lewis-311)

NASA TECH BRIEF

NASA Tech Briefs are issued to summarize specific innovations derived from the U.S. space program, to encourage their commercial application. Copies are available to the public at 15 cents each from the Clearinghouse for Federal Scientific and Technical Information, Springfield, Virginia 22151.

Electronic Shutter Gates Image Orthicon On and Off

It was desired to develop a very sensitive TV camera system that could record images of diffuse light-scattering regions in the solar system. In order to take full advantage of image orthicon photocathode sensitivity, it was necessary to relate precisely the exposure time of the photocathode to the peak highlight in the scene under investigation. To accomplish this, an electronic shutter was designed that would gate the image section on during expose time and off at all other times.

The developed shutter permitted continuously variable exposure times over a range from 125 milliseconds to 16 seconds. The image section was gated on by applying approximately −550v to the photocathode and a negative potential approximately 85% of photocathode potential to the image section. To reduce image degradation, it was determined that the combination rise and fall time of the "on" pulse should be a maximum of 0.01% of the shutter duration. To permit the desired shutter durations, the maximum exposure time was set at 16 seconds and the minimum was determined by the rise and fall time limitation. Turn-on time of the electronic shutter proved to be approximately 900 microseconds and turn-off time approximately 8 microseconds. Nominal shutter pulse width (expose time) was made manually adjustable (for tests) to values of 1/8, 1/4, 1/2, 1, 2, 4, 8, and 16 seconds, while remote continuous adjustment (for mission operation) from 0.07 to 17.4 seconds was also provided.

Notes:

1. A threshold sensitivity of 10^{-9} footcandle has been measured at the 16-second exposure interval.
2. Typical applications for this camera include observation of star fields, night cloud cover, star-illuminated scenes, and gaseous regions in space. Spectrometric data could also be recorded, and, if used in conjunction with image converters, low-level X-radiation and thermal phenomena could be recorded.
3. Inquiries concerning this invention may be directed to:

   Technology Utilization Officer
   Headquarters
   National Aeronautics and Space Administration
   Washington, D.C. 20546.
   Reference: B67-10270

Patent status:

Inquiries about obtaining rights for the commercial use of this invention may be made to NASA, Code GP, Washington, D.C. 20546.

Source: Warren A. Sensening
of Radio Corporation of America
under contract to
NASA Headquarters
(HQ-96)

Category 01

This document was prepared under the sponsorship of the National Aeronautics and Space Administration. Neither the United States Government nor any person acting on behalf of the United States Government assumes any liability resulting from the use of the information contained in this document, or warrants that such use will be free from privately owned rights.

NASA TECH BRIEF

NASA Tech Briefs are issued to summarize specific innovations derived from the U.S. space program, to encourage their commercial application. Copies are available to the public at 15 cents each from the Clearinghouse for Federal Scientific and Technical Information, Springfield, Virginia 22151.

High Impact Pressure Regulator Withstands Impacts of Over 15,000 g

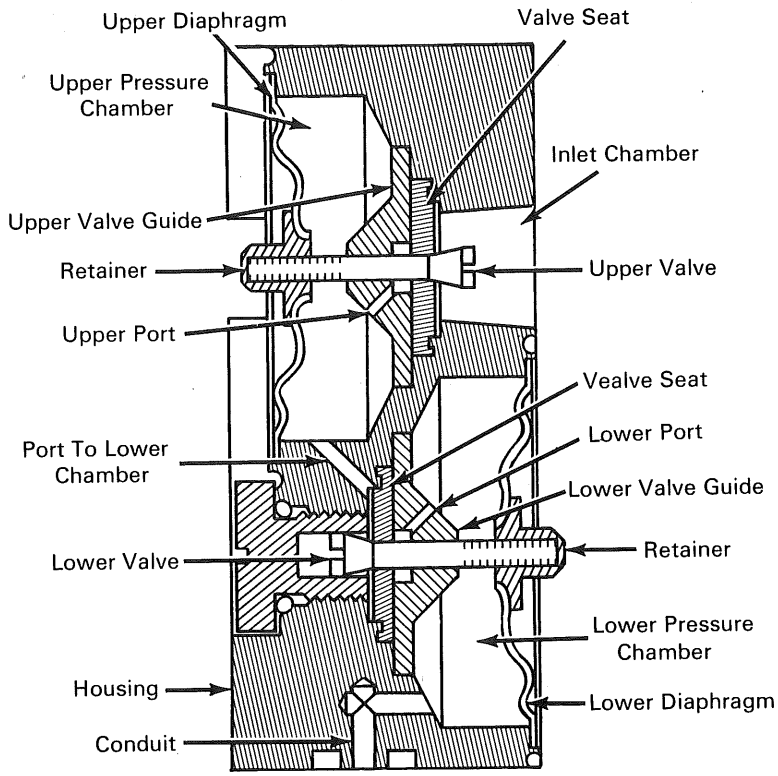

The problem:

To develop a high impact pressure regulator capable of withstanding impacts of over 15,000 g. The regulator, to be used with a high impact gas scannograph, must be capable of regulating pressures from 2000 to 200 psig so as to maintain output pressures in a range of 82 to −1.2 psig. The instrument must be able to withstand high impact and continue to function accurately for long periods of time. In the past, spring loaded pistons and other structures having large mass were used. These regulators were not able to withstand high impact forces and could not function continuously and accurately.

The solution:

A carefully constructed regulator, welded by helium arc and other special processes, that has two chambers which are similar in structure but which respond to different pressure valves. One chamber and associated valving structure maintains a first pressure while the second chamber with associated valving structure

(continued overleaf)

This document was prepared under the sponsorship of the National Aeronautics and Space Administration. Neither the United States Government nor any person acting on behalf of the United States Government assumes any liability resulting from the use of the information contained in this document, or warrants that such use will be free from privately owned rights.

maintains a different and reduced pressure. By the passage of fluid through the first and second chambers, the pressure of the third is regulated from a specific input valve to the desired output pressure valve.

How it's done:

The upper valve is biased to an open position by the upper diaphragm. If fluid pressure entering the upper chamber through the upper port is greater than the opposing spring force exerted by the upper diaphragm, the diaphragm moves to the left and the valve moves toward the valve seat. The diaphragm and valve are adjusted to hold a pressure of between 100 and 150 psig in the upper chamber.

Fluid pressure from the upper chamber passes through the lower valve into the lower pressure chamber. The lower valve is biased to an open position by the lower diaphragm. If fluid pressure entering the lower chamber through the lower valve is greater than the opposing spring force of the lower diaphragm, the diaphragm moves to the right and the valve moves toward the valve seat. The diaphragm and valve are adjusted to hold a pressure within the lower chamber so that the discharge pressure through the conduit will be 80 psig.

Notes:

1. This pressure regulator was designed to handle small volumes of gas flow for a gas scannograph. The flow rate is on the order of 50 ml per minute.
2. The regulator successfully withstood an impact force on the order of 15,000 g for about 2 msec and continued to function properly.
3. This regulator could be used on equipment and machinery subject to high vibratory and impact problems.
4. Inquiries concerning this invention may be directed to:

   Technology Utilization Officer
   NASA Pasadena Office
   4800 Oak Grove Drive
   Pasadena, California 91103
   Reference: B67-10274

Patent status:

Inquiries about obtaining rights for the commercial use of this invention may be made to NASA, Code GP, Washington, D.C. 20546.

Source: A. N. Topits, Jr., E. L. Floyd,
and J. E. Biles, Jr.
Jet Propulsion Laboratory
(NPO-10175)

NASA TECH BRIEF

NASA Tech Briefs are issued to summarize specific innovations derived from the U.S. space program, to encourage their commercial application. Copies are available to the public at 15 cents each from the Clearinghouse for Federal Scientific and Technical Information, Springfield, Virginia 22151.

Primary Cell Uses Neither Liquid Nor Fused Electrolytes

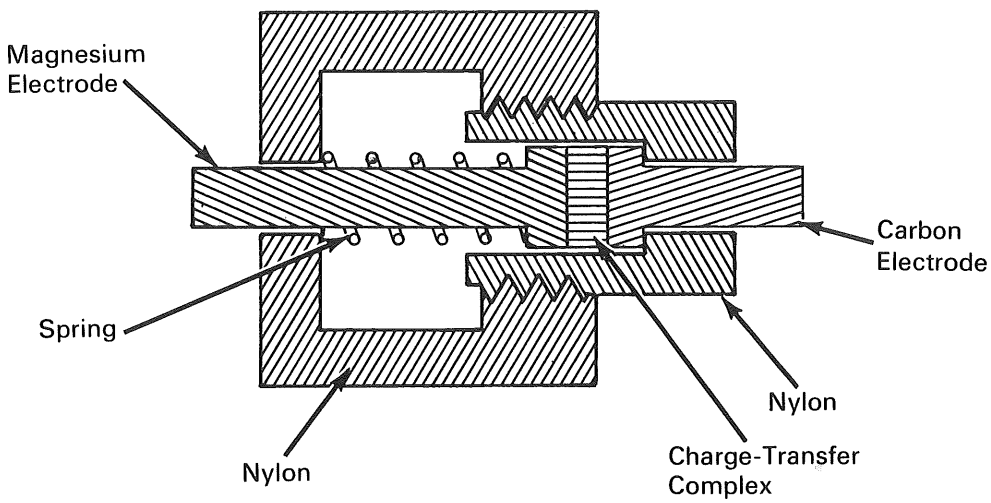

The problem:

Present miniature battery cells are tightly packed with liquids or liquid containing pastes of a corrosive nature that can seriously damage adjacent electronic components if leakage occurs. These wet electrolytes have been essential for controlled steady conversion of chemical to electrical energy.

The solution:

A dry, solid state device that establishes an electrode reaction by a charge transfer mechanism without liquid phase ionization of electrolyte compounds. The complex is sufficiently conductive to permit the passage of useful current.

How it's done:

A hollow nylon cell block in two parts forms the body of the primary cell. The charge transfer complex, for example, tetracyanoethylene and graphite, is mixed in an inert solvent such as dichloromethane and the solvent removed in high vacuum. The complex is then compacted in a hydraulic press under 100,000 lb/in.^{2} pressure that yields disks of approximately 1/2-in. diameter and 0.04-in. thickness. A magnesium and a carbon electrode are designed with contact faces to match the complex disk, and the three components are enclosed in the two-part nylon cell block with a small spring holding them together in intimate contact as shown in the sketch.

Notes:

1. Open circuit voltages of 1.5 v are obtained at a short-circuit current density of 150 microamps/cm^2. These levels are sufficient to energize a variety of microelectronic circuits or to power capacitor-fired pyrotechnic devices such as squibs or explosive bolts.

(continued overleaf)

This document was prepared under the sponsorship of the National Aeronautics and Space Administration. Neither the United States Government nor any person acting on behalf of the United States Government assumes any liability resulting from the use of the information contained in this document, or warrants that such use will be free from privately owned rights.

2. A related invention is described in NASA Tech Brief B66-10682, December 1966. Inquiries may also be directed to:

   Technology Utilization Officer
   NASA Pasadena Office
   4800 Oak Grove Drive
   Pasadena, California 91103
   Reference: B67-10275

Patent status:

Title to this invention has been waived under the provisions of the National Aeronautics and Space Act (42 U.S.C. 2457 (f)), to the California Institute of Technology (Attention: T. L. Stam), 1201 East California Street, Pasadena, California 91109.

Source: A. M. Herman, A. Rembaum, and F. Gutmann
Jet Propulsion Laboratory
(NPO-10001)

NASA TECH BRIEF

NASA Tech Briefs are issued to summarize specific innovations derived from the U.S. space program, to encourage their commercial application. Copies are available to the public at 15 cents each from the Clearinghouse for Federal Scientific and Technical Information, Springfield, Virginia 22151.

System Precisely Controls Oscillation of Vibrating Mass

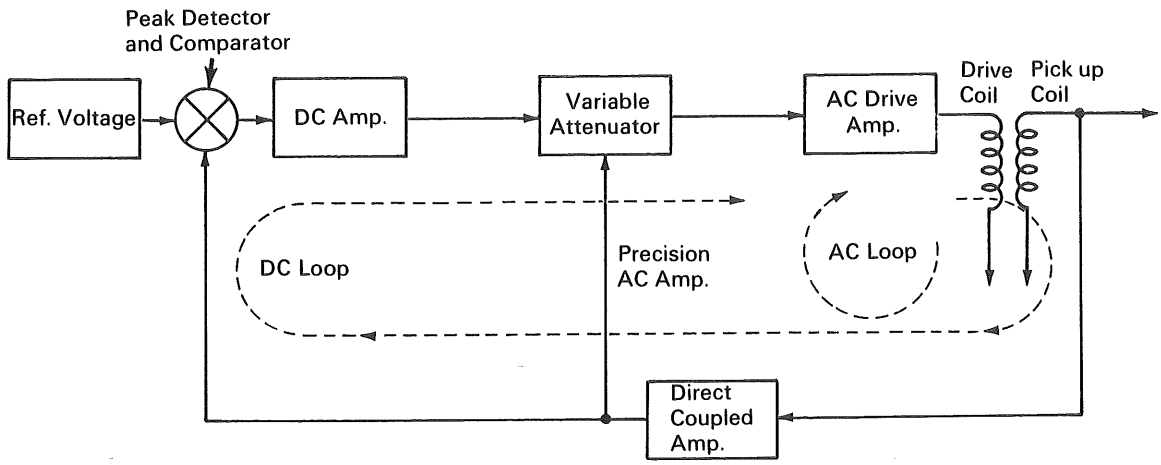

A system is designed to precisely control the sinusoidal amplitude of a vibrating mechanical mass. The system uses two sets of coils, one as a driving coil and one as a pickup or sensing coil, mounted to the rigid frame of the system. Two small permanent magnets are mounted on the mass to be vibrated so they move inside the coils in close proximity to their electromagnetic fields. Amplitude information is obtained from the pickup coil, amplified, and compared with a preset electronic reference that provides an error signal that can be used to determine the amplitude of the drive signal. When the mechanical mass reaches the desired vibrational amplitude, the drive signal amplitude is regulated at the precise level to maintain it.

In operation, a small drive signal will appear at the drive coil during initial startup, initiating vibration of the mass. Due to the high Q mechanical resonance of the system at 40 cps, it will vibrate primarily at that frequency. A portion of the vibration signal is sensed by the pickup coil and amplified in the three-stage direct coupled amplifier. This signal passes through the variable attenuator without attenuation since the amplitude at the peak detector is less than 5 volts peak-to-peak, the threshold of the entire amplitude regulating loop. The signal is amplified further in the ac drive amplifier and increases the amplitude of mass oscillation until a peak-to-peak amplitude of 1 degree is reached. As the peak signal exceeds 5 volts, the peak detector begins passing the extreme peaks of the sinewave. This peak current is then amplified and filtered. The resulting dc voltage causes a dc current to flow through the variable attenuator, whose diodes appear in series for dc but are seen as back-to-back or in parallel by an ac signal. This configuration minimizes distortion introduced by the nonlinear characteristics of the diodes.

The dc current through the diodes reduces their dynamic resistance, resulting in attenuation of signal from the precision ac amplifier and delivery of a lower

(continued overleaf)

This document was prepared under the sponsorship of the National Aeronautics and Space Administration. Neither the United States Government nor any person acting on behalf of the United States Government assumes any liability resulting from the use of the information contained in this document, or warrants that such use will be free from privately owned rights.

signal to the drive coil. The ac signal across the attenuator is reduced to a gain about the entire ac loop exactly equal to one. If the amplitude tends to rise, the regulator loop will decrease the ac loop gain, and if the amplitude tends to fall, the regulator loop will increase the ac loop gain. The ac signal from the attenuator is amplified in the drive amplifier and direct coupled to the drive coil.

Notes:

1. This technique could be used to vibrate mirrors in an optical chopping application.
2. Inquiries concerning this invention may be directed to:

   Technology Utilization Officer
   Marshall Space Flight Center
   Huntsville, Alabama 35812
   Reference: B67-10276

Patent status:

Inquiries about obtaining rights for the commercial use of this invention may be made to NASA, Code GP, Washington, D.C. 20546.

Source: D. J. Hancock
of Bunker-Ramo
under contract to
Marshall Space Flight Center
(M-FS-1875)

NASA TECH BRIEF

NASA Tech Briefs are issued to summarize specific innovations derived from the U.S. space program, to encourage their commercial application. Copies are available to the public at 15 cents each from the Clearinghouse for Federal Scientific and Technical Information, Springfield, Virginia 22151.

IR Vidicon Scanner Monitors Many Test Points

An IR (infrared) scanner is considered as a replacement for hardwire and switching elements in a test system that involves many signal paths from transducers to a central evaluation unit. Each subsystem of the equipment under test would contain an indicator panel mounting IR sources (such as gallium arsenide diodes whose radiation varies in proportion to their electrical inputs) that will reflect each individual test point parameter and its changes in state.

The scanner, an IR-sensitive vidicon, is used to "look at" the indicator panels in turn and pick up the level of radiation from each IR source mounted thereon. These sources can indicate pressure, temperature, strain, and so on throughout a large and complex structure such as a spacecraft or space vehicle.

Note:

This development is in conceptual stage only, and as of date of publication of this Tech Brief, neither a model nor prototype has been constructed.

Patent status:

No patent action is contemplated by NASA.

Source: Robert J. Fortier
of The Boeing Company
under contract to
Marshall Space Flight Center
(M-FS-1937)

Category 01

This document was prepared under the sponsorship of the National Aeronautics and Space Administration. Neither the United States Government nor any person acting on behalf of the United States Government assumes any liability resulting from the use of the information contained in this document, or warrants that such use will be free from privately owned rights.

NASA TECH BRIEF

NASA Tech Briefs are issued to summarize specific innovations derived from the U.S. space program, to encourage their commercial application. Copies are available to the public at 15 cents each from the Clearinghouse for Federal Scientific and Technical Information, Springfield, Virginia 22151.

Vibrator Elapsed Time Is Automatically Controlled

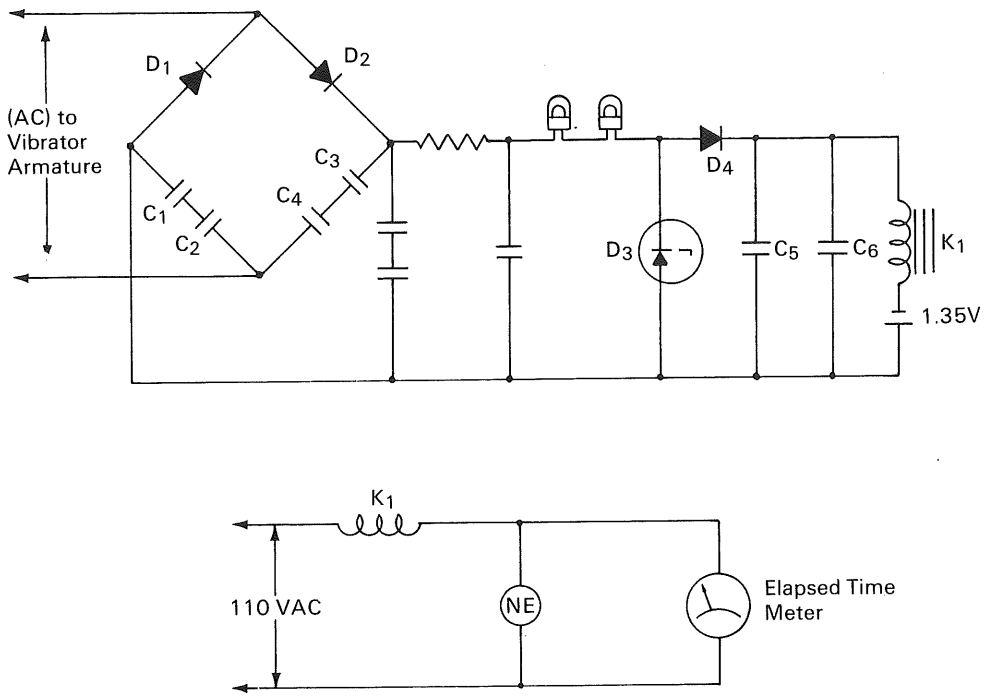

The problem:

It was desired to determine elapsed operating time for vibrators (shaker tables) when three vibrators were located in one room and were powered by two amplifiers through either of two control systems. Additionally, two of the three vibrators could be operated in tandem from one or two control systems driving both amplifiers simultaneously. The problem could not be resolved by actuation of relays based on energizing the vibrator fields and amplifier plate circuits.

The solution:

A circuit that operates the control system elapsed time clocks only when voltage is applied to the vibrator armatures.

How it's done:

AC voltage is fed to the voltage doubler circuit consisting of D_1, D_2, C_1, C_2, C_3, and C_4. This circuit, plus the Pi filter system following it, produces a dc voltage proportional to the ac voltage across the vibrator armature. The two light bulbs act as inexpensive nonlinear resistors. having negligible resistance

(continued overleaf)

This document was prepared under the sponsorship of the National Aeronautics and Space Administration. Neither the United States Government nor any person acting on behalf of the United States Government assumes any liability resulting from the use of the information contained in this document, or warrants that such use will be free from privately owned rights.

at low input voltages and approximately 8K ohms at 220 volts. Since K_1 requires 1 ma dc current at 10 v for operation, voltage across it is limited to 15 v with D_3 acting as the limiter. The two light bulbs protect D_3 and the balance of the circuit.

The K_1 relay springs are adjusted so that 3 v rms will operate it. The 1.35 v mercury cell is used as a bias to increase K_1 sensitivity. The circuit consisting of D_4, C_5, and C_6 increases the shutoff time constant of the relay in order to hold it "on" during low voltage conditions due to resonances, but does not affect pull-in time which is essentially instantaneous with application of ac voltage to the doubler circuit. There is one clock (elapsed time meter) with a neon indicator lamp for each vibrator.

Notes:

1. The system operates only when the vibrator operates, requires no accessory power supplies, and does not affect the vibrator or its data acquisition systems.
2. Inquiries concerning this invention may be directed to:

   Technology Utilization Officer
   Marshall Space Flight Center
   Huntsville, Alabama 35812
   Reference: B67-10284

Patent status:

Inquiries about obtaining rights for the commercial use of this invention may be made to NASA, Code GP, Washington, D.C. 20546.

Category 01

Source: E. A. Burowick
North American Aviation, Inc.
under contract to
Marshall Space Flight Center
(MFS-2573)

NASA TECH BRIEF

NASA Tech Briefs are issued to summarize specific innovations derived from the U.S. space program, to encourage their commercial application. Copies are available to the public at 15 cents each from the Clearinghouse for Federal Scientific and Technical Information, Springfield, Virginia 22151.

Wideband, High Efficiency Optical Modulator Requires Less than 10 Watts Drive Power

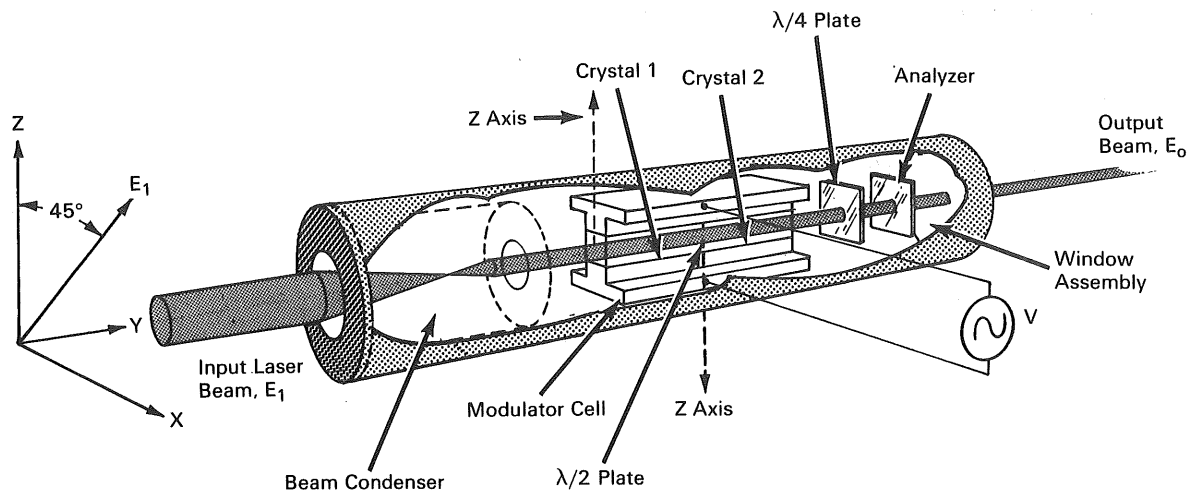

The problem:

To develop an optical modulation system capable of operation over a 100 MHz video bandwidth with less than 10-watts modulator drive power. Prior art required up to 500 volts rms and 270 watts for operation over a 50 MHz video bandwidth. Optical modulation systems may serve importantly in future space wideband communication systems.

The solution:

An optical modulation system, consisting of an optical modulator and transistorized driver, that combines small cross-section potassium dideuterium phosphate crystals with laser beam-condensing optics.

How it's done:

The internal view shows construction details of the transverse lumped-element electro-optical modulator. A laser beam condenser is used at the modulator input to reduce and collimate the beam. The modulator cell employs equal length crystals on each side of a half-wave plate with their optic axes opposite in sense to balance the natural birefringence of the electro-optic element that is a function of temperature. When a voltage is applied across the cell, generating an E field along the optical (Z) axis of the crystals, a phase retardation is imparted to the X component of a light beam propagating along the Y axis. The result of the retardation imparted to the X component of the light beam is a conversion of linearly polarized input light to an elliptically polarized output. The analyzer in the output window converts the polarization modulated beam to intensity modulation. The quarter-wave plate biases the system to align the peak modulated polarization vector with the analyzer axis, thus eliminating the need for a dc bias component in the applied modulation voltage.

(continued overleaf)

This document was prepared under the sponsorship of the National Aeronautics and Space Administration. Neither the United States Government nor any person acting on behalf of the United States Government assumes any liability resulting from the use of the information contained in this document, or warrants that such use will be free from privately owned rights.

Notes:

1. The CW modulation tests and the pulse response measurements show the feasibility of employing the modulator in either CW or PCM communications systems. The compact size and temperature independent performance of the high aspect ratio, potassium dideuterium phosphate modulator indicate feasibility for future use of similar designs in broadband space communication systems.
2. A space qualification design and test effort must be carried out before implementing the space modulation system with the low drive power modulator. The temperature independent performance must be verified in the vacuum of space.
3. Complete details are contained in: *Wideband High Efficiency Optical Modulator,* by W. J. Rattman, B. K. Yap, and W. E. Becknell, Final Report, 15 Feb. 1966 to 15 March 1967, Sylvania Electronic Systems, Waltham, Mass. Copies are available from:

   Technology Utilization Officer
   Marshall Space Flight Center
   Huntsville, Alabama 35812
   Reference: B67-10289

Patent status:

Inquiries about obtaining rights for the commercial use of this invention may be made to NASA, Code GP, Washington, D.C. 20546.

Source: W. J. Rattman, B. K. Yap,
and W. E. Becknell
of Sylvania Electronic Systems
under contract to
Marshall Space Flight Center
(MFS-12733)

AEC-NASA TECH BRIEF

AEC-NASA Tech Briefs describe innovations resulting from the research and development program of the U.S. AEC or from AEC-NASA interagency efforts. They are issued to encourage commercial application. Tech Briefs are published by NASA and may be purchased, at 15 cents each, from the Clearinghouse for Federal Scientific and Technical Information, Springfield, Virginia 22151.

Sensitive Bridge Circuit Measures Conductance of Low-Conductivity Electrolyte Solutions

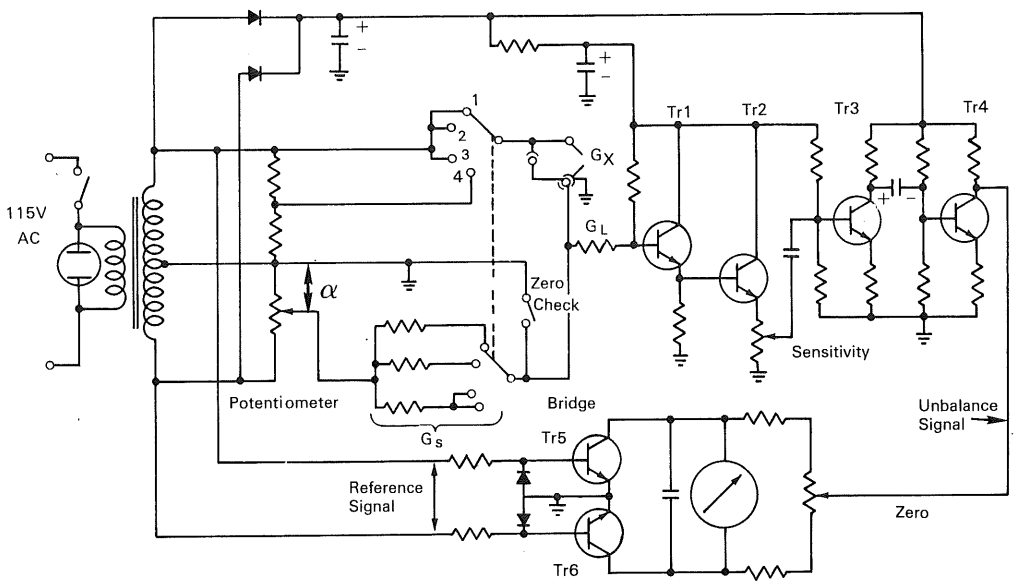

The problem:

To develop a circuit that permits sensitive and accurate conductance measurements of low-conductivity electrolyte solutions. The deflection of the null indicator near the point of balance must depend linearly on the resistance or conductance to be measured in order to facilitate conductometric titrations. The measured conductance must not depend appreciably on the reactive component (lead capacities etc.) of the system to be measured.

The solution:

A compact bridge circuit that uses a 25-ohm potentiometer to achieve a null-point sensitivity of 10^{-4} or less, and an accuracy of approximately 0.2% when the tangent of the phase angle between the unbalance and reference voltages is zero. The bridge utilizes a phase sensitive detector to obtain a linear deflection of the null indicator relative to the measured conductance and, within certain limits, a negligible influence of the phase angle ϕ on the point of balance. A phase angle with $\tan \phi = 0.15$ causes an error of only 0.8%. The bridge circuit is operated from a 115 volt, 60 Hz source and provides four conductance measurement ranges: 0 to 1μmho, 0 to 10μmho, 0 to 100 μmho, and 0 to 1 mmho.

How it's done:

The bridge is balanced by a 25-ohm potentiometer that forms part of a variable ratio arm. The approximate balance condition is obtained for the μmho

(continued overleaf)

This document was prepared under the sponsorship of the Atomic Energy Commission and/or the National Aeronautics and Space Administration. Neither the United States Government nor any person acting on behalf of the United States Government assumes any liability resulting from the use of the information contained in this document, or warrants that the use of any information, apparatus, method, or process disclosed in this document may not infringe privately owned rights.

meter ranges when $G_X = \alpha G_S$ ($G_X = 10\alpha G_S$ for the mmho range), where G_X and G_S are the unknown and known conductances respectively, and α is the fraction of the total potentiometer resistance between the sliding contact and the grounded end of the slidewire.

The unbalance voltage is amplified, substantially free of phase shift, by transistor amplifier network Tr 1–Tr 4, and applied to the phase sensitive detector Tr 5, Tr 6. The phase sensitive detector acts as a reference voltage operated switch, producing a square-wave function reference signal. The unbalance signal is therefore multiplied by the square-wave function, presented as a dc component of the product, and indicated on the microammeter. The meter deflection is proportional to the product of the absolute value of the unbalance voltage, and the cosine of the phase angle between the unbalance and reference voltages.

Notes:

1. The bridge circuit performance was tested by connecting a 1 megohm resistor to the unknown conductance terminals, paralleled by a variable air dielectric capacitor. The bridge was then balanced in the 0- to 1-μmho range for various settings of the capacitor.
2. Additional details are contained in *Review of Scientific Instruments 37,* p. 671–672, May 1966.
3. Inquiries concerning this innovation may be directed to:

   Office of Industrial Cooperation
   Argonne National Laboratory
   9700 South Cass Avenue
   Argonne, Illinois 60439
   Reference: B67-10294

Source: K. Schmidt
Chemistry Division
(ARG-147)

Patent status:

Inquiries about obtaining rights for commercial use of this innovation may be made to:

Mr. George H. Lee, Chief
Chicago Patent Group
U.S. Atomic Energy Commission
Chicago Operations Office
9800 South Case Avenue
Argonne, Illinois 60439

NASA TECH BRIEF

NASA Tech Briefs are issued to summarize specific innovations derived from the U.S. space program, to encourage their commercial application. Copies are available to the public at 15 cents each from the Clearinghouse for Federal Scientific and Technical Information, Springfield, Virginia 22151.

Electronic Dummy for Acoustical Testing

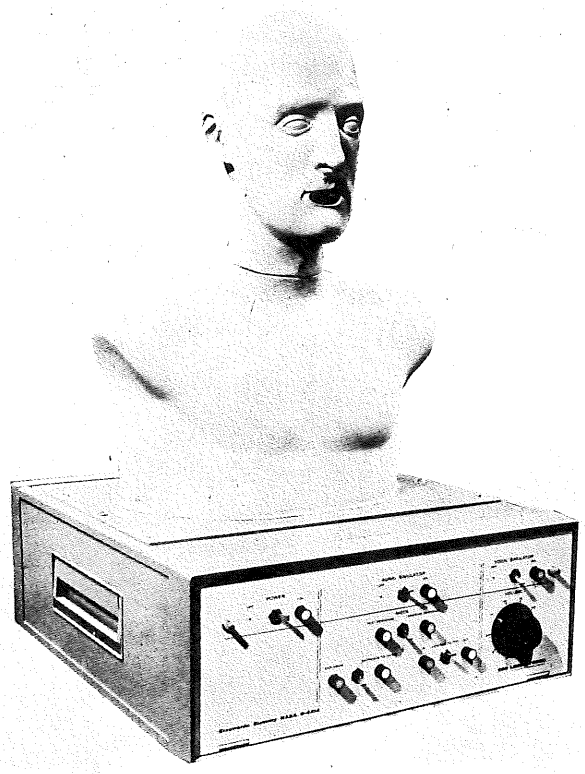

In order to conduct acoustical tests in a laboratory fashion, that is with variations and repeatability not dependent on human subjects, it was decided to design and fabricate an electronic dummy (ED). The ED was proposed as a manikin to represent the average male torso from the Xiphoid process upward and to include an exact acoustic replica of the human head.

As designed and fabricated, the head simulates natural flesh impedances, features an artificial voice that produces levels up to 100 db (referenced to 0.0002 dyne/cm^2) at 6 inches, and highly advanced artificial ears that measure sound pressures at the eardrum or the entrance to the ear canal. A unique hearing-mode amplifier optionally provides automatic and continuously variable loudness contour equalization.

Because the head must withstand repeated application and removal of tight-fitting helmets plus internally supporting a vocal simulator and two aural simulators, a rigid skull form was fabricated from 1/8-inch thick fiberglass. This skull form was fitted into the

(continued overleaf)

This document was prepared under the sponsorship of the National Aeronautics and Space Administration. Neither the United States Government nor any person acting on behalf of the United States Government assumes any liability resulting from the use of the information contained in this document, or warrants that such use will be free from privately owned rights.

simulated flesh form. The simulated flesh form was fabricated from a flesh-colored composite of plastisol, having a durometer of approximately 15 to 20, a value that offered the best compromise between accurate flesh simulation and high tear strength.

The artificial voice (vocal simulator) was fabricated from a modified commercially available loudspeaker and an aluminum coupler to link the speaker to the oval-shaped mouth opening. The required response equalization was achieved electrically when an acoustic screen damper raised harmonic distortion to an intolerable level.

The aural simulators are made with ear canals consisting of metal tubes terminating in microphones (the eardrums) and duplicating the impedance and response, as functions of frequency, of human ears. Placement of the simulators into the head form of the ED introduces ear pinna and head diffraction into their response, allowing the simulators to accurately duplicate the response "seen" by human ears.

In the hearing response mode, the outputs of the ear canals are fed to hearing-mode amplifiers that simulate the average male hearing response as a function of sound pressure level at the ear drums, in accordance with the Fletcher–Munson equal loudness contours.

Notes:

1. The ED should prove a valuable tool in acoustical testing through a wide range of applications.
2. Further information concerning this invention is presented in CBS Laboratories Final Report, N66-25565, "Development of an Electronic Dummy for Acoustical Testing," available from the Clearinghouse for Federal Scientific and Technical Information (CFSTI), Springfield, Virginia 22151, price $3.00 (hardcopy), $0.65 (microfiche). Inquiries may also be directed to:

   Technology Utilization Officer
   Manned Spacecraft Center
   Houston, Texas 77058
   Reference: B67-10298

Patent status:

Inquiries about obtaining rights for the commercial use of this invention may be made to NASA, Code GP, Washington, D.C. 20546.

Source: B. B. Bauer, A. J. Rosencheck, E. L. Torick, M. Stern, and A. L. Di Mattia of CBS Laboratories under contract to Manned Spacecraft Center (MSC-206, 1164, 1165, and 1166)

NASA TECH BRIEF

NASA Tech Briefs are issued to summarize specific innovations derived from the U.S. space program, to encourage their commercial application. Copies are available to the public at 15 cents each from the Clearinghouse for Federal Scientific and Technical Information, Springfield, Virginia 22151.

Circuit Provides Overcurrent Protection to Push–Pull Amplifier

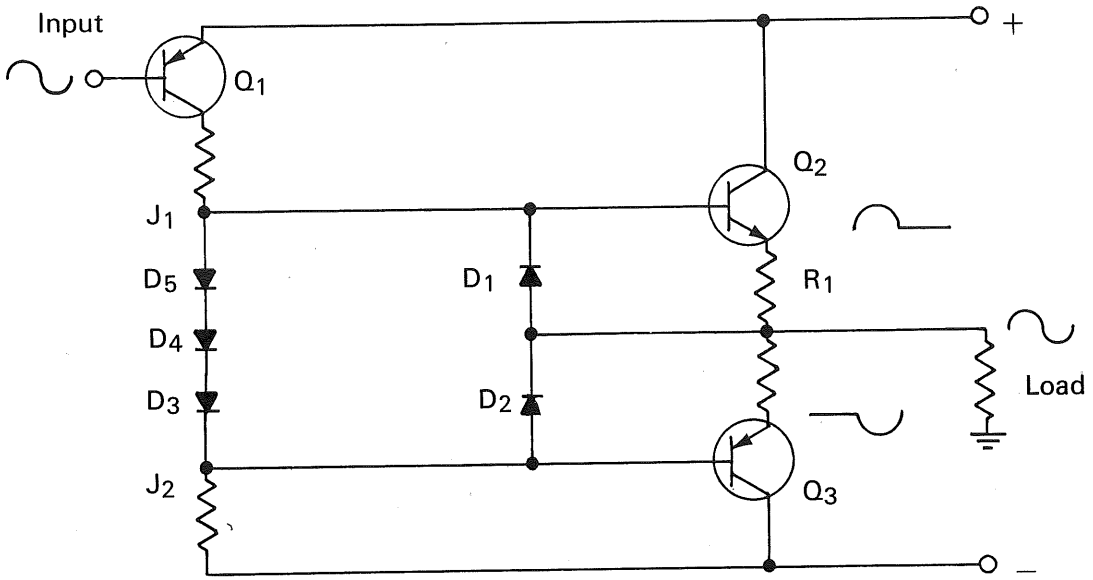

The problem:

In many push–pull amplifiers, should the load be short circuited for any reason, the amplifier will be destroyed. Additionally, if complementary system transistors are used, oscillation and storage effects inherent in amplifiers can cause both sides of the push–pull device to conduct simultaneously. This short circuits the two bias supplies and usually destroys the amplifier.

The solution:

An amplifier circuit that limits the current flowing to a predetermined level and provides that overcurrent in one half of the push–pull amplifier turns off the other half.

How it's done:

The circuit is first considered as though diodes D_1 and D_2 are not included. A signal at the input is amplified by Q_1 and appears at junction points J_1 and J_2. If Q_2 and Q_3 are biased class B or class AB, the positive portion of the signal at J_1 is amplified by Q_2 (an NPN) and the negative portion at J_2 by Q_3 (a PNP). The negative portion of the signal at J_1 will turn Q_2 off and the positive portion at J_2 will turn Q_3 off. Thus the load is driven by Q_2 during one half and by Q_3 during the other half cycle, the action from which the term "push–pull amplifier" derives.

The circuit is now considered with D_1 and D_2 included. Within the series circuit formed by R_1, D_2, D_3, D_4, D_5, and the emitter-base junction of Q_2, all the voltage drops are fixed by nonlinear characteristics except for that in R_1. Also, the voltage across the emitter-base junction of Q_2 and the voltage across D_2 balance each other and can be disregarded. The remainder consists of equal and opposite voltage

(continued overleaf)

This document was prepared under the sponsorship of the National Aeronautics and Space Administration. Neither the United States Government nor any person acting on behalf of the United States Government assumes any liability resulting from the use of the information contained in this document, or warrants that such use will be free from privately owned rights.

drops across D_5, D_4, and D_3, and R_1. Thus, the instantaneous voltage across R_1 can be no greater than the voltage across the three diodes or insufficient bias on Q_2 results and it begins to turn off. This means that if an excess current through R_1 causes the voltage across it to equal the sum of the diode voltages, the circuit will start current limiting, the level of which is set by the size of R_1.

If Q_2 tends to draw excessive current, D_2 turns on and impresses a voltage across the emitter-base junction of Q_3 opposite in polarity to that required to maintain Q_3 in the conduction state. Conversely, should Q_3 tend to draw excessive current, equal and opposite action would take place in D_1 and the emitter-base junction of Q_2 to cause Q_2 to turn off. Thus, no high frequency oscillation or driving voltage can cause both Q_2 and Q_3 to conduct at the same time to short circuit the voltage across the two output terminals.

Note:

Inquiries concerning this innovation may be directed to:

Technology Utilization Officer
Manned Spacecraft Center
Houston, Texas 77058
Reference: B67-10300

Patent status:

No patent action is contemplated by NASA.

Source: Daniel J. Skorra
of Honeywell, Incorporated
under contract to
Manned Spacecraft Center
(MSC-12033)

NASA TECH BRIEF

NASA Tech Briefs are issued to summarize specific innovations derived from the U.S. space program, to encourage their commercial application. Copies are available to the public at 15 cents each from the Clearinghouse for Federal Scientific and Technical Information, Springfield, Virginia 22151.

Process Controls Introduction of Selected Impurities into Semiconductor Wafers

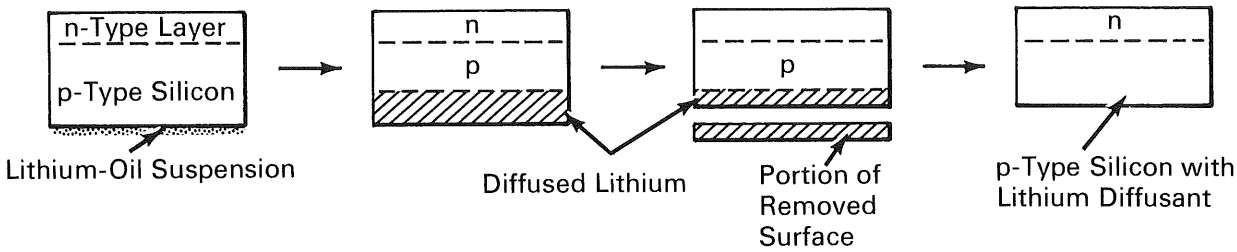

The problem:

To devise a process for controlling the concentration of lithium diffused as a dopant, or impurity, into the base region of a diffused n-on-p silicon solar cell wafer.

The solution:

A modified three-step process in which part of the surface layer of the base region of the p-type silicon containing the diffused dopant (lithium) is removed, prior to redistributing the remaining portion of the dopant into the bulk of the silicon wafer.

How it's done:

Lithium is diffused into the base region of the silicon wafer using a coating of lithium suspended in oil as the diffusant source. Part of the surface layer on the base region is then chemically or mechanically removed to a depth less than that of the total penetration of the diffused lithium. The diffusant in the remaining portion of the surface layer is redistributed throughout the bulk of the silicon wafer by heat treatment.

Notes:

1. The advantages of this process are that the final impurity concentration in the wafer can be closely controlled by adjusting the amount of surface layer removed, and the effects of surface alloying, generally encountered in the diffusion of metallic impurities as lithium, are eliminated.
2. This process, which has been specifically used for lithium doping of diffused n-on-p solar cell wafers, can be applied to other dopants and semiconductor materials.
3. Inquiries concerning this innovation may be directed to:

   Technology Utilization Officer
   Goddard Space Flight Center
   Greenbelt, Maryland 20771
   Reference: B67-10303

Patent status:

No patent action is contemplated by NASA.

Source: A. R. Topfer and W. C. Bartholomay
of Radio Corporation of America
under contract to
Goddard Space Flight Center
(GSFC-523)

Category 01

This document was prepared under the sponsorship of the National Aeronautics and Space Administration. Neither the United States Government nor any person acting on behalf of the United States Government assumes any liability resulting from the use of the information contained in this document, or warrants that such use will be free from privately owned rights.

AEC-NASA TECH BRIEF

AEC-NASA Tech Briefs describe innovations resulting from the research and development program of the U.S. AEC or from AEC-NASA interagency efforts. They are issued to encourage commercial application. Tech Briefs are published by NASA and may be purchased, at 15 cents each, from the Clearinghouse for Federal Scientific and Technical Information, Springfield, Virginia 22151.

Transistor Biased Amplifier Minimizes Diode Discriminator Threshold Attenuation

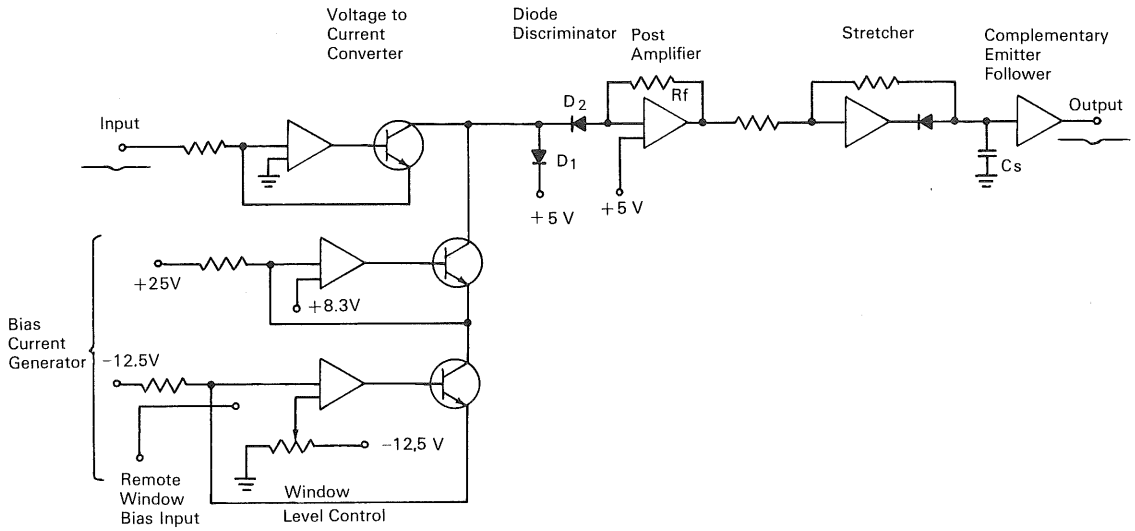

The problem:

Diode nonlinearity in biased amplifiers causes considerable signal attenuation above the diode threshold level. When the threshold diode begins to conduct, the diode impedance is not negligible relative to the source impedance, resulting in nonlinear signal attenuation near the diode threshold.

The solution:

A transistor biased amplifier in which the biased diode discriminator is driven by a high impedance (several megohms) current source, rather than a voltage source with several hundred ohms output impedance. This high impedance input arrangement makes the incremental impedance of the threshold diode negligible relative to the input impedance. In this configuration, the output current (and voltage) of the amplifier is a linear function of the input current over a large dynamic range, quite independent of the threshold diode impedance.

How it's done:

The input voltage pulses are converted to current pulses by the voltage-to-current converter circuit, which consists of an operational amplifier with a Darlington Pair output. The current pulses are applied to the diode discriminator circuit, consisting of D_1 and D_2. Diode D_1 quiescently conducts a bias current which is adjustable. D_2 is quiescently non-conducting, until the input signal exceeds the threshold bias at D_1. At this time, D_1 is completely cut off and the signal, in excess of the threshold level, flows through D_2 into the post amplifier. The post amplifier consists of an operational amplifier whose input is essentially grounded (grounded base input amplifier). The post amplifier converts the excess current signal

(continued overleaf)

This document was prepared under the sponsorship of the Atomic Energy Commission and/or the National Aeronautics and Space Administration. Neither the United States Government nor any person acting on behalf of the United States Government assumes any liability resulting from the use of the information contained in this document, or warrants that the use of any information, apparatus, method, or process disclosed in this document may not infringe privately owned rights.

to a voltage signal. The open loop gain of the amplifier is kept high due to a bootstrap amplifier configuration. The gain of the amplifier circuit can be adjusted by changing the value of Rf. For example: for a gain of 10, Rf=10 Kohms; for a gain of 5, Rf=5 Kohms, etc. This stage is designed to provide a fast rise time to prevent pulse amplitude distortion at high bias levels in the system. The output of the post amplifier is fed through a stretcher circuit to reproduce the original shape of the voltage pulse at the input to the voltage-to-current converter. This stretcher circuit is not required if the input pulses are square wave rather than R-C clipped. The output of the stretcher circuit is tied to a complementary emitter follower, which is used effectively as a cable driver.

The threshold bias is produced by the bias current generator, which consists of two operational amplifiers and two feedback amplifiers. The bias reference is variable from ground to −10 volts. The reference to the bias current generator can be supplied either internally or externally (in which case a ramp waveform generator can be used). Internally the reference window is variable by the window level control. The output of the bias current generator is tied to the diode discriminator circuit and controls the threshold level of the system.

Notes:

1. Selection of the diodes (D_1 and D_2) for the diode discriminator is not necessary, since the conductance characteristics of the diodes have no effect on the basic operation of the circuit.
2. This circuit can also be used as a linear gate by applying a fixed current pulse rather than variable DC current to the discriminator diode D_1.
3. Reference: *Nuclear Instruments and Methods 32,* (1965), p. 147–151.
4. Inquiries concerning this innovation may be directed to:

   Office of Industrial Cooperation
   Argonne National Laboratory
   9700 South Cass Avenue
   Argonne, Illinois 60439
   Reference: B67-10311

   Source: R. N. Larsen—Electronics Division (ARG-163)

Patent status:

Inquiries about obtaining rights for commercial use of this innovation may be made to:

Mr. George H. Lee, Chief
Chicago Patent Group
U.S. Atomic Energy Commission
Chicago Operations Office
9800 South Cass Avenue
Chicago, Illinois 60439

AEC-NASA TECH BRIEF

AEC-NASA Tech Briefs describe innovations resulting from the research and development program of the U.S. AEC or from AEC-NASA interagency efforts. They are issued to encourage commercial application. Tech Briefs are published by NASA and may be purchased, at 15 cents each, from the Clearinghouse for Federal Scientific and Technical Information, Springfield, Virginia 22151.

Precision Capacitor Has Improved Temperature and Operational Stability

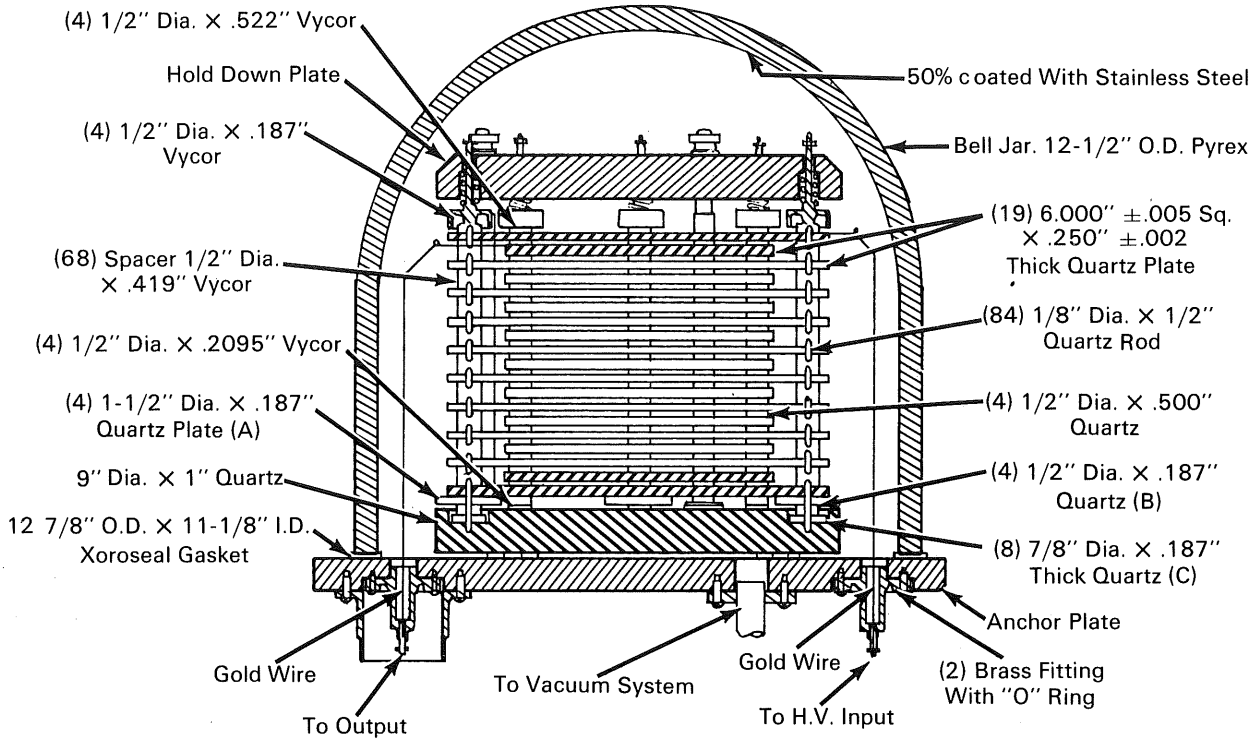

The problem:

To fabricate a precision capacitor in the 1000–2000 picofarad range which will (1) have a near-zero temperature coefficient of capacitance, (2) eliminate ion chamber action caused by air ionization in the dielectric, and (3) minimize undesirable electromagnetic field charging effects on the surfaces of structural components of the capacitor.

Present air dielectric precision capacitors exhibit ion chamber action and charging effects of structural material. Temperature coefficients of capacitance in precision capacitors with dry nitrogen gas dielectrics are typically of the order of 16–22 ppm/°C.

The solution:

A vacuum dielectric capacitor which is fabricated from materials having very low temperature coefficients of expansion to achieve a temperature coefficient of capacitance of less than 0.57 ppm/°C. By using a vacuum dielectric design, ion chamber action is absent. The surfaces of structural components are plated with a conductive coating to ensure electrical

(continued overleaf)

This document was prepared under the sponsorship of the Atomic Energy Commission and/or the National Aeronautics and Space Administration. Neither the United States Government nor any person acting on behalf of the United States Government assumes any liability resulting from the use of the information contained in this document, or warrants that the use of any information, apparatus, method, or process disclosed in this document may not infringe privately owned rights.

continuity between the elements in the same plate stack.

How it's done:

The capacitor consists of interleaved input and output plate stacks of metallic-plated quartz, plate spacers of plated Vycor, and hold-down plates, assembled in a bell jar. The capacitor is contained in a vacuum, which eliminates ion chamber action. The use of materials with different temperature coefficients of expansion provides temperature compensation such that plate spacing expands more rapidly than the plate area, thus capacitance is kept constant.

Both plate stacks are fabricated from equal-sized plates of quartz. The input plates are rotated 45° with respect to the output plates, with the corners of the plates in both stacks lying outside the interleaved area. Each plate in the same stack is then supported at the corners by Vycor spacers. The plates and spacers are anchored together with quartz rods, each rod extending through the plate and into the Vycor spacer directly above and below it. The plate stacks are supported on a quartz base plate by three cylindrical quartz buttons, A, B, and C, aligned vertically at each corner of the bottom plate in each plate stack.

All components of the capacitor are plated with a conductive coating to ensure electrical continuity between all elements of the same stack. Plating is omitted, however, on one contacting surface of each group of support buttons to maintain electrical isolation between the two stacks. The unplated surfaces of the buttons are also insulated from any electric fields arising from the application of potential to either plate stack to minimize the influence of surface charge currents. Such currents decay slowly because of the high resistivity of the medium, and are almost indistinguishable from normal leakage currents. A similar insulation arrangement is used at the top of both plate stacks at the Vycor insulators.

The internal structure of the capacitor is shielded from influence of external electric fields by coating the interior surface of the bell jar with a semitransparent conductive layer of stainless steel. This coating is grounded to the metal base plate with finger contacts not shown in the figure. The dimensional stability of the capacitor over a varying range of temperatures is less than the coefficients of expansion of either structural material used, and the capacitor exhibits a short term temperature coefficient of capacitance of approximately 0.4 ppm/°C.

Notes:

1. The capacitor has been developed for use with a sensitive instrument capable of detecting and measuring the output voltage stability, in parts-per-million, of a dc voltage source of up to 10 Kv. The capacitor replaces both the reference voltage and resistive divider used as the input to a vibrating-reed electrometer. The guarded vacuum dielectric design of this capacitor is such that the effective leakage current is comparable to the electrometer background current, about 10^{-16} ampere, at voltages up to 1 Kv, rising to about 10^{-14} ampere at 10 Kv.
2. Drift stability of the capacitor system is approximately 1 ppm per 12 hours.
3. Additional details are contained in *Nuclear Instruments and Methods 29,* 1964, p. 141–148.
4. Inquiries concerning this innovation may be directed to:

   Office of Industrial Cooperation
   Argonne National Laboratory
   9700 South Cass Avenue
   Argonne, Illinois 60439
   Reference: B67-10313

   Source: W. K. Brookshier and R. N. Lewis
   Electronics Division
   (ARG-189)

Patent status:

Inquiries about obtaining rights for commercial use of this innovation may be made to:

Mr. George H. Lee, Chief
Chicago Patent Group
U.S. Atomic Energy Commission
Chicago Operations Office
9800 South Cass Avenue
Chicago, Illinois 60439

NASA TECH BRIEF

NASA Tech Briefs are issued to summarize specific innovations derived from the U.S. space program, to encourage their commercial application. Copies are available to the public at 15 cents each from the Clearinghouse for Federal Scientific and Technical Information, Springfield, Virginia 22151.

SiC/Si Diode Trigger Circuit Provides Automatic Range Switching for Log Amplifier

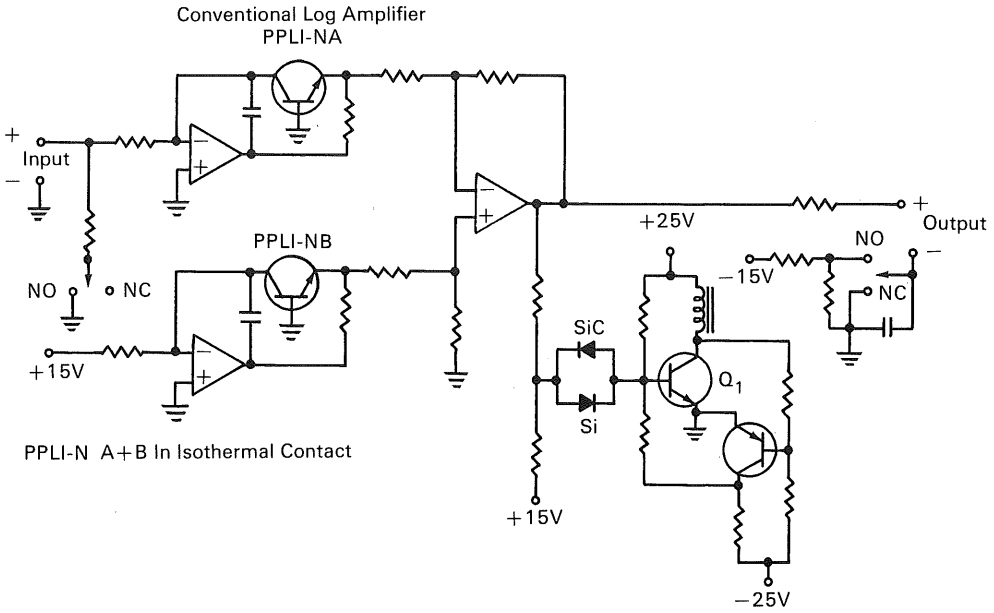

The problem:

To provide automatic range change to extend the operating range of a logarithmic amplifier–conversion circuit and to assure stability at or near the range switch-over point. It is required that the range extension circuit provide two more decades of operation to the logarithmic amplifier converter.

The solution:

A SiC/Si diode pair provides hysteresis for a trigger circuit that actuates a relay at the desired range extension point. The trigger circuit, consisting of a transistor driven relay, provides the range extension while the diode pair provides the hysteresis to assure stability in the system at or near the range crossover point.

How it's done:

The logarithmic amplifier–converter is a standard circuit utilizing operational amplifiers. The two transistors in transdiode configuration are in isothermal contact to provide temperature stability of 0.3 percent per degree C. The conventional difference amplifier, associated with the logarithmic amplifier–converter, provides a conversion accuracy of 1 percent over the entire operating range.

The automatic range extension circuit consists of two active portions: a hysteresis generator and a relay trigger circuit.

(continued overleaf)

This document was prepared under the sponsorship of the National Aeronautics and Space Administration. Neither the United States Government nor any person acting on behalf of the United States Government assumes any liability resulting from the use of the information contained in this document, or warrants that such use will be free from privately owned rights.

The standard logarithmic amplifier–converter circuit will operate in the range of 5×10^{-10} to 1×10^{-3} amp, with one volt per decade of input current appearing at the output of the amplifier. When the input current reaches 1×10^{-3} amp (or in fact slightly higher, 8×10^{-2} amp), transistor Q_1 in the trigger circuit turns on, thereby energizing the relay. One set of contacts of the relay divides the input current by 100 (the addition of 1.01 ohms resistance to ground). The second set of contacts adds two volts to the output of the log amplifier. Since the output is one volt per decade of input current, when the input is divided by 100 (two decades), the output will drop two volts giving a step function in the X–Y plot of the output. By adding two volts to the output at the same time that the input is divided by 100, the graph of output voltage versus input current will appear as an uninterrupted straight line.

If no hysteresis were provided at the input to the trigger circuit, any noise associated with the input current at, or very near, the range switch-over point would cause the extender circuit to drop in and out on each noise spike. To avoid this instability, a SiC diode is placed in parallel with a Si diode to provide a hysteresis at the input to the trigger circuit. The SiC diode has a forward bias voltage drop of 1.6 volts, while the Si diode has a forward bias voltage of 0.6 volt. This offset of bias voltage (unbalanced hysteresis) assures that the trigger circuit will not energize and de-energize at precisely the same input current. More specifically, the trigger circuit is energized when the input current reaches 8×10^{-2} amp, but will not be de-energized until the input current drops below 6×10^{-2} amp. This allows a peak-to-peak noise level, at the input to the log amplifier, of nearly 2 ma before stability of the system is in jeopardy.

Notes:

1. Although this system provides a range extension of two decades, any desired decade extension can be obtained by selecting the division factor of the input circuit and adding the appropriate voltage at the output to cover the number of decades the system range has been extended.
2. By using other combinations of diodes, any hysteresis can be generated to provide the stability required to cover the noise level at the input to the system. The only limitation is that the trigger transistor is not biased beyond the point where it will turn on.
3. Inquiries concerning this invention may be directed to:

   Technology Utilization Officer
   Marshall Space Flight Center
   Huntsville, Alabama 35812
   Reference: B67-10314

Patent status:

Inquiries about obtaining rights for the commercial use of this invention may be made to NASA, Code GP, Washington, D.C. 20546.

Source: Tyco Laboratories
under contract to
Marshall Space Flight Center
(MFS-1879)

NASA TECH BRIEF

NASA Tech Briefs are issued to summarize specific innovations derived from the U.S. space program, to encourage their commercial application. Copies are available to the public at 15 cents each from the Clearinghouse for Federal Scientific and Technical Information, Springfield, Virginia 22151.

Braze Joint Quality Tested Electromagnetically

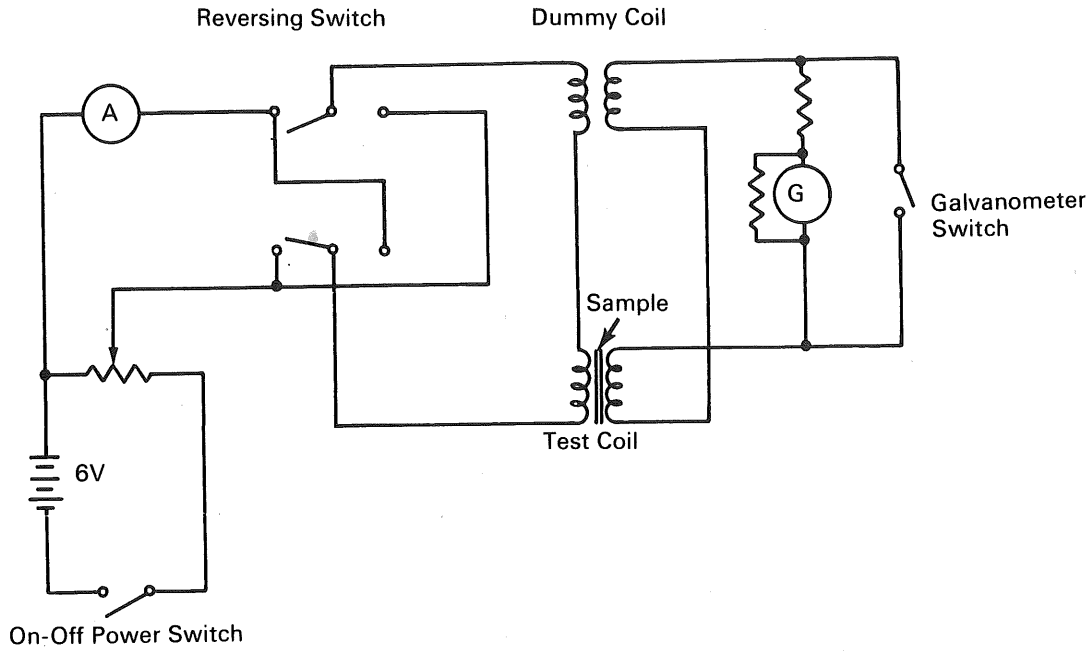

The problem:

To develop a nondestructive test method that would indicate the extent of braze alloy flow in engine injector sleeve-to-post joints. Ultrasonic scanning and radiographic techniques have proved troublesome due to system complexity and joint inaccessibility.

The solution:

An electromagnetic method that detects the extent of gold/nickel braze alloy flow in an engine injector sleeve-to-post joint.

How it's done:

By reversing a measured current through one side of a mutual inductor, an instantaneous but measurable voltage is induced in the other coil. When a magnetically permeable material is in the vicinity of the two coils, the secondary voltage is increased due to a more efficient coupling of the magnetic flux. The magnitude of the voltage increase is a function of the quantity, permeability, and geometry of the material inserted. The instant testing was aimed at holding the permeability and geometry of the material constant while measuring the effects of altering the quantity of material (braze alloy) present. The geometry effect is, of course, not entirely separable from the quantity of material present.

The sketch illustrates the test setup. Connecting the primary side of the test circuit to the common terminals of the switch provides for reversing the current

(continued overleaf)

This document was prepared under the sponsorship of the National Aeronautics and Space Administration. Neither the United States Government nor any person acting on behalf of the United States Government assumes any liability resulting from the use of the information contained in this document, or warrants that such use will be free from privately owned rights.

in the test system without reversing the current through the ammeter. The test portion of the circuit is comprised of two identically wound mutual inductors and a microvolt detector circuit. The coil primaries are series connected with the power supply so that a current reversal produces twice the inductance of either coil (series aiding). The secondaries are series cross connected so that equal inductance in both coils produces opposing voltage with a net of zero (series bucking). When a magnetic sample is inserted into one coil, the resulting voltages are still opposed, but are of unequal magnitude so that a net measurable voltage is produced in the detector circuit. Using this dummy coil method, readings can be obtained on all samples related to a zero reference. This method also results in greater magnification of differences between samples because the mutual and self inductances of the coils are essentially negligible.

Notes:

1. This method could be used to measure magnetic braze alloy flow in any joints of nonmagnetic materials.
2. Inquiries concerning this innovation may be directed to:

   Technology Utilization Officer
   Marshall Space Flight Center
   Huntsville, Alabama 35812
   Reference: B67-10333

Patent status:

No patent action is contemplated by NASA.

Source: R. D. McKown and D. B. Graves
of North American Aviation, Inc.
under contract to
Mashall Space Flight Center
(MFS-12795)

NASA TECH BRIEF

NASA Tech Briefs are issued to summarize specific innovations derived from the U.S. space program, to encourage their commercial application. Copies are available to the public at 15 cents each from the Clearinghouse for Federal Scientific and Technical Information, Springfield, Virginia 22151.

Method of Improving Contact Bonds in Silicon Integrated Circuits

The problem:

Producing stable and reliable metallic systems for interconnections, contact pads, and bonded leads in silicon planar integrated circuits. In a conventional fabrication, employing interconnection metal of vapor-deposited aluminum, contact pads of vapor-deposited gold on chromium, and bonded lead wires of gold, metal-to-metal contact bonds are formed. The intermetallic compounds present in the interfaces result in a degradation of bond strength, an increase in ohmic contact resistance, and eventually in open circuits caused by voids which arise from volumetric phase mismatch.

The solution:

A method of fabrication based on substrate isolation of the interconnection metal from the contact pad and bonded wire.

How it's done:

The interconnections are separated from the contact pads by a barrier domain of bulk silicon substrate material which has been degenerately doped. The entire region, which is comprised of the interconnection metal (vapor-deposited aluminum), the degenerate substrate section, and the contact pad (vapor-deposited gold on chromium), is bounded by a diffused isolation ring. Degradation is avoided as the metal compatibility need only be between the respective land metals and the substrate material, and not between all the metals collectively. The relatively thick substrate barrier prevents any phase reactions between the interconnection and pad-wire components of the metal assemblage. The preparation of this specific interconnection-contact-bonding aggregation involves techniques that are essentially standard to integrated circuit processing: planar diffusion, vapor deposition, and photoengraving.

Notes:

1. This approach may be applied not only to silicon integrated circuits but also to circuits fabricated from the more exotic semiconductor materials and to hybrid and thin-film circuits.
2. Inquiries concerning this innovation may be directed to:

   Technology Utilization Officer
   Marshall Space Flight Center
   Huntsville, Alabama 35812
   Reference: B67-10335

Patent status:

No patent action is contemplated by NASA.

Source: M. A. Schuster and W. J. Lytle
of Westinghouse Electric Corporation
under contract to
Marshall Space Flight Center
(MFS-1753)

Category 01

This document was prepared under the sponsorship of the National Aeronautics and Space Administration. Neither the United States Government nor any person acting on behalf of the United States Government assumes any liability resulting from the use of the information contained in this document, or warrants that such use will be free from privately owned rights.

NASA TECH BRIEF

NASA Tech Briefs are issued to summarize specific innovations derived from the U.S. space program, to encourage their commercial application. Copies are available to the public at 15 cents each from the Clearinghouse for Federal Scientific and Technical Information, Springfield, Virginia 22151.

Accuracy of Laser Measurements Improved by Pulse Autocorrelator Electronic System

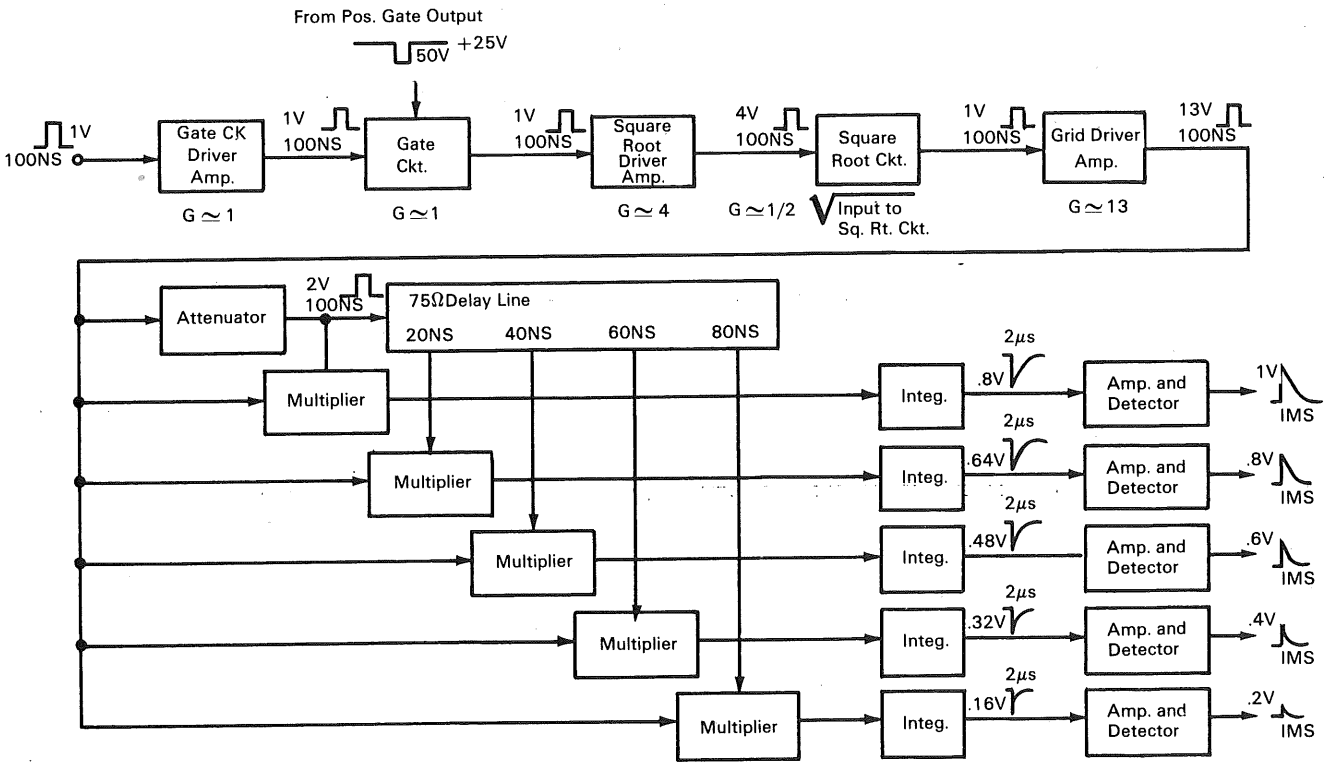

The problem:

To develop a method which permits the dispersion effect of a disturbed laser signal to be discriminated from background noise. Laser signals are of very short duration. As they travel through mediums having a varying refractive index, they may undergo multipath dispersion, and the disturbed pulses at the receiver become difficult to differentiate from a noisy background. The application of lasers to communications and measurements encounters variable mediums of this nature.

The solution:

A laser pulse autocorrelator that is an electronic multiplier and integrator network, based on the

(continued overleaf)

This document was prepared under the sponsorship of the National Aeronautics and Space Administration. Neither the United States Government nor any person acting on behalf of the United States Government assumes any liability resulting from the use of the information contained in this document, or warrants that such use will be free from privately owned rights.

autocorrelation mathematical function and designed to detect multipath arrivals of gaussian-shaped signal pulses. The autocorrelation function is time-dependent and can be determined by integrating, for many occurrences, the product of a received pulse and its delayed replicas. Thereby, the autocorrelation function of the disturbed pulses can be resolved from a noisy background, whereas a single pulse could not be distinguished. This electronic system represents a convenient method for accurately determining important parameters of a transmitted pulsed laser signal.

How it's done:

The autocorrelator is constructed to detect the multipath arrivals of laser signal pulses. The modules (attenuator, multipliers, integrators, etc.) perform electronically the arithmetic operations required for evaluation of the autocorrelation integral.

Two conditions are assumed in the operation: (a) Only positive signals are autocorrelated, and (b) the integrators of the practical autocorrelator have finite storage times (4 microseconds) that are long as compared to the duration time of the individual signal pulses (100 nanoseconds), but are short as compared to the pulse repetition rate (100 pps). Therefore, each incoming signal pulse is individually autocorrelated, and the autocorrelation coefficient outputs for a particular pulse are not functions of the autocorrelation coefficients of any previous pulses.

The incoming signal (shown as a 100-nanosecond, 1-volt square pulse) enters the autocorrelator at the gate circuit drive amplifier. The purpose of this emitter-follower amplifier is to present a high impedance load to the signal source. The signal then passes into the gate circuit. The purpose of the gate circuit is to permit the free passage of signal pulses while preventing the passage of noise pulses.

The signal then passes through the square-root driver amplifier and square-root circuit, and is amplified to a high level by the grid driver amplifier. At this point, part of the signal is attenuated and fed to the delay line, where it is tapped off at various delay points and fed to the low level control grids of the multipliers. The main output of the grid driver amplifier is fed directly to the high level screen grids of the multipliers.

The multiplier outputs are then fed to the integrators, which in turn produce output pulses whose heights are proportional to the integral of the multiplier outputs. Finally, to permit the recording of the integrator outputs by audio FM machines, the integrator output pulses are stretched by the amplification and detection circuits.

Notes:

1. The delay times (arguments) for the five autocorrelation coefficient outputs of the autocorrelator were chosen as 0, 20, 40, 60, and 80 nanoseconds. The reason is that pulses emitted by a laser transmitter are approximately gaussian in shape, and have a pulse width on the order of 100 nanoseconds. It would be difficult to resolve multiple arrivals of these pulses for which the delay time between arrivals was less than 20 nanoseconds. Also, for this specific problem, it is improbable that delay times would exceed 80 nanoseconds.
2. Calibration of the entire autocorrelator is achieved by feeding a train of 100-nanosecond, 1-volt square pulses into the autocorrelator, and then adjusting the gain control potentiometers on the amplification and detection circuits so that the five outputs are proportional to the corresponding theoretical values.
3. Inquiries concerning this innovation may be directed to:

   Technology Utilization Officer
   Manned Spacecraft Center
   Houston, Texas 77001
   Reference: B67-10338

Patent status:

No patent action is contemplated by NASA.

Source: S. J. Campanella
of Melpar, Inc.
under contract to
Manned Spacecraft Center
(MSC-10033)

NASA TECH BRIEF

NASA Tech Briefs are issued to summarize specific innovations derived from the U.S. space program, to encourage their commercial application. Copies are available to the public at 15 cents each from the Clearinghouse for Federal Scientific and Technical Information, Springfield, Virginia 22151.

Device Enables Calibration of Microphones at High Sound Pressure Levels

The problem:

To devise a means of accurately calibrating microphones at high sound pressure intensities (up to 190 dB; where dB = 20 times the common logarithm of the sound pressure intensity, referred to a pressure of 0.0002 dyne per sq cm). Air is not a suitable coupling medium for the calibration because of the inherent nonlinearity at these high sound intensities.

The solution:

A coupling device employing a liquid instead of air as the coupling medium. With this device, microphones can be calibrated at sound pressure intensities ranging from 110 dB to 175 dB in the frequency range of 16 Hz to 10 kHz.

How it's done:

The device incorporates a small liquid-filled cavity driven at one end by means of a piston consisting of a cylindrical stack of electrically excited piezoelectric disks having an effective diameter of 1.5 inches. The cavity, in the shape of a rectangular prism at one end and a conical frustum at the other, has an overall volume of approximately 1.2 cubic inches. An ac voltage applied across the faces of each disk (all of which are connected in parallel) sets the composite piston into mechanical vibration over a displacement amplitude required to produce the desired sound level. Motion of the sealed piston against a diaphragm tends to compress the liquid in the cavity, thereby producing relatively high calibration pressures for small displacements. These pressures vary proportionally to the displacement of the piston. Needle valves in the device isolate the flow of liquid to and from the cavity and also to and from a pressure gage, which is used to set the sound level. The needle valves have a built-in safety adjustment which protects the microphones from excessive pressures.

Notes:

1. The system can operate in an automatic mode by using a standard microphone as a control sensor. Feedback from the standard microphone controls the calibration signal level.
2. Inquiries concerning this innovation may be directed to:

   Technology Utilization Officer
   Marshall Space Flight Center
   Huntsville, Alabama 35812
   Reference: B67-10336

Patent status:

No patent action is contemplated by NASA.

Source: Albert Gillen
of Gulton Industries, Inc.
under contract to
Marshall Space Flight Center
(MFS-11980)

Category 01

This document was prepared under the sponsorship of the National Aeronautics and Space Administration. Neither the United States Government nor any person acting on behalf of the United States Government assumes any liability resulting from the use of the information contained in this document, or warrants that such use will be free from privately owned rights.

AEC-NASA TECH BRIEF

AEC-NASA Tech Briefs describe innovations resulting from the research and development program of the U.S. AEC or from AEC-NASA interagency efforts. They are issued to encourage commercial application. Tech Briefs are published by NASA and may be purchased, at 15 cents each, from the Clearinghouse for Federal Scientific and Technical Information, Springfield, Virginia 22151.

Improved Head-Controlled TV System Produces High-Quality Remote Image

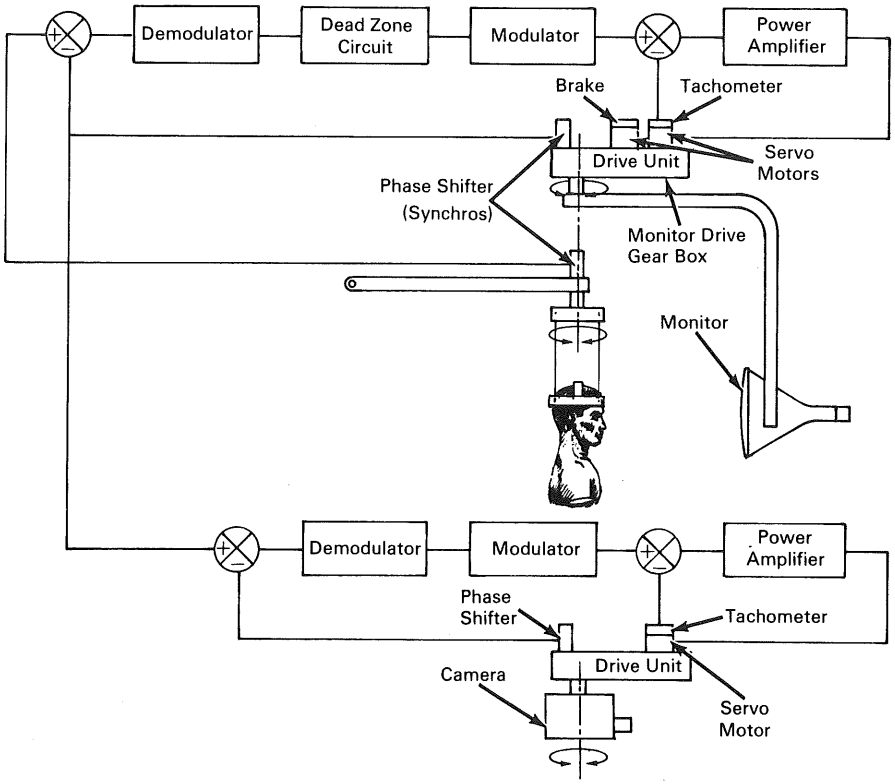

The problem:

To provide a manipulator operator with an efficient system for viewing the remote handling and processing of reactive, flammable, explosive, or contaminated materials. A fast response system, allowing frequent changes of view, operation between far removed points, and close work capabilities with uninterrupted manipulator operation, is desired. Prior techniques, often used in "hot laboratories," require operator viewing with periscopes and telescopes through shielding windows. These conventional optical methods limit the viewing angles and distances, and introduce complications in maintaining a clear sight path. Conventional closed circuit television systems have been used, but they lack the resolution and direction angle mobility required to permit fast, efficient work. Servoed TV remote positioning systems, including head controlled designs, are subjected to

(continued overleaf)

This document was prepared under the sponsorship of the Atomic Energy Commission and/or the National Aeronautics and Space Administration. Neither the United States Government nor any person acting on behalf of the United States Government assumes any liability resulting from the use of the information contained in this document, or warrants that the use of any information, apparatus, method, or process disclosed in this document may not infringe privately owned rights.

unwanted movement and blurring due to quick, inadvertent movements by the operator. Servoed systems that use a small monitor mounted directly on the operator's headpiece restrict the operator's view of his surroundings, and add to a sense of disorientation associated with these devices.

The solution:

An improved resolution TV camera/monitor positioning system in which the pan and tilt motions of the camera and monitor are slaved to follow the corresponding motions of the operator's head. The system provides the operator with a constant, close range view of his work, requires no line-of-sight viewing paths, and provides the operator with a hands-off viewing capability for uninterrupted remote manipulation. Small, annoying movements of the camera and monitor are substantially eliminated by providing a 7° to 12° dead zone in which inadvertent operator movements do not affect the system.

How it's done:

The improved resolution of this system is accomplished by using narrow camera angle of view. Since the number of elements per inch of image in a given direction increases in inverse proportion to the angle of view in the same direction, the clarity of the object image is improved as the angle of view is decreased. If the angle of view is made too small, however, the efficiency of the operator is hampered. In testing several angles of view, 30° was found to provide a good compromise between resolution and viewing angle. Although this angle is relatively small, the operator can readily shift the view to see throughout a much larger volume.

The remote viewing system consists of a 675-line-per-frame, 30-frame-per-second TV camera, a 14-inch monitor, an operator headpiece, and a servo coupling system. The 14-inch slaved monitor positioned about 23 inches from the operator's eyes provides a 30° angle of view to him. This results in a 1:1 correspondence between the viewing angles, reduces operator disorientation, and permits easy location of items within the working volume.

Small synchros coupled to a low inertia, easily donned headpiece provide command signals for the pan and tilt motions of the monitor. The voltages generated by the headpiece synchros are fed through the demodulator, dead zone, and modulator circuits. They are subtracted from similar voltages generated by the synchros on the monitor drive gear boxes. The resultant voltages ultimately control the position of the monitor. The camera is similarly controlled by comparing the monitor and camera position signals. A near 1:1 positional correspondence is maintained between the motions of the operator's head, the camera and the monitor.

Notes:

1. One of the features of the head-controlled TV positioning system is that the operator can establish and maintain his viewing orientation relative to a remote worksite. After surveying the worksite area, an operator gains a sense of presence in the remote area which permits him to relocate objects and perform work efficiently. Conventional television positioning systems do not have this characteristic and consequently operators have no way of knowing in which direction the camera is aimed until they somehow relate the position of the camera with the scene being viewed.
2. Additional details are contained in *Remote Systems Technology Division, American Nuclear Society (RSTD-ANS) Proceedings,* 1965, p. 57–60 and *RSTD-ANS Proceedings,* 1966, p. 124–128.
3. Inquiries concerning this innovation may be directed to:

   Office of Industrial Cooperation
   Argonne National Laboratory
   9700 South Cass Avenue
   Argonne, Illinois 60439
   Reference: B67-10317

Source: R. Goertz, C. Potts,
D. Mingesz, and J. Lindberg
Remote Control Division
(ARG-128)

Patent status:

Inquiries about obtained rights for commercial use of this innovation may be made to:

Mr. George H. Lee, Chief
Chicago Patent Group
U.S. Atomic Energy Commission
Chicago Operations Office
9800 South Cass Avenue
Argonne, Illinois 60439

AEC-NASA TECH BRIEF

AEC-NASA Tech Briefs describe innovations resulting from the research and development program of the U.S. AEC or from AEC-NASA interagency efforts. They are issued to encourage commercial application. Tech Briefs are published by NASA and may be purchased, at 15 cents each, from the Clearinghouse for Federal Scientific and Technical Information, Springfield, Virginia 22151.

Electronic Test Instrument Generates Extremely Small Current Signals

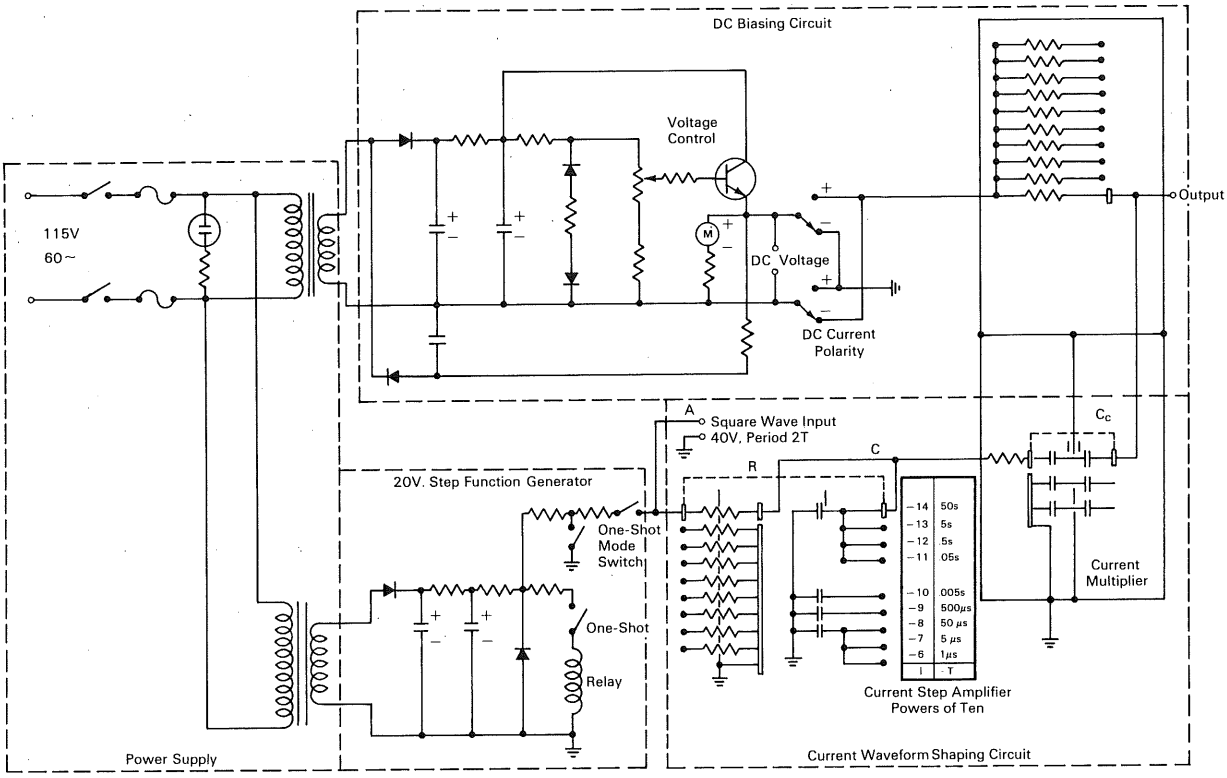

The problem:

The develop a source of dynamic test signals in the range from 10^{-4} to 10^{-12} amperes. This source must develop a square output current waveform, rather than a square output voltage waveform, and the waveform must have a short rise time with negligible overshoot or ringing. Rise times range from about 0.1 μsec at 10^{-4} ampere, to 1 μsec at 10^{-9} ampere, and 100 μsec at 10^{-12} ampere. Instruments with such short rise times are not generally available.

The solution:

A signal generator involving an extension of the technique of applying a triangular voltage waveform to a small capacitor to obtain a square-wave output current, or ramp function to obtain a step function output. The effects of stray capacitance are minimized by appropriate shielding.

How it's done:

The basic circuit for obtaining the required signal is an R-C-C_c T-network with $C >> C_c$. The circuit is

(continued overleaf)

This document was prepared under the sponsorship of the Atomic Energy Commission and/or the National Aeronautics and Space Administration. Neither the United States Government nor any person acting on behalf of the United States Government assumes any liability resulting from the use of the information contained in this document, or warrants that the use of any information, apparatus, method, or process disclosed in this document may not infringe privately owned rights.

comprised of four main divisions: power supply, dc biasing circuit, 20 volt step function generator, and the current waveform shaping circuit. The left side, stem, and right side of the T represent R, C, and C_c respectively. R is inserted for the purpose of obtaining an integrated time constant RC. A square-wave input voltage to the R side results in the application of a triangular voltage wave to C_c which then delivers a square-wave current output. Different values of R, C, and C_c are selected to provide required pulse characteristics to the circuit under test.

A 115 volt, 60-cycle power source is used: (1) to provide a separate power source (10 vdc) by means of a rectifying circuit for the dc biasing circuit and (2) to provide, through a second rectifying circuit, a 20-volt step function at the contacts of relay 1. If the desired output signal is a biased isolated step function, the only input required is 115 volts, 60 cycles. If a repetitive square-wave output without bias is desired, then it is necessary: (1) to provide another power source which will deliver a 40-volt square-wave at point A, (2) to set the mode switch such that the rectifying circuit (lower left in diagram) is cut out, and (3) to set the biasing resistor switch at infinity to eliminate any input from the entire upper half of the circuit. This means that the square-wave input travels through the R-C-C_c-amplitude switch network only.

For this basic T circuit to develop a triangular wave of sufficient accuracy, it is essential to shield the output terminals and C_c. Also, R must be placed through a hole in a grounded plate. This is accomplished by placing a shield plate half-way between the two switch sections selecting R, with the resistors passing through holes in the plate. The diameter of these holes is not critical, but should be about 3/16 inch when resistors of 1/8-inch body diameter are used. It is also necessary that the right-hand switch section be of the type that grounds the unused contacts.

Notes:

1. If an isolated step function is applied, in place of a repetitive square-wave input, the output current will be a step function followed by exponential decay to zero. This alternate "one shot" mode of operation is necessary when the circuit under test has a response time of a few tenths of a second or more.
2. This instrument has been used to successfully test video preamplifiers used with a scanning electron microscope system and with commercial electron microprobe scanning systems.
3. This innovation may be useful in calibrating nuclear instrumentation and light scattering particle counting equipment.
4. Additional details are contained in *Instrument Society of America (ISA) Transactions,* vol. 4, no. 4, October 1965, p. 374–377.
5. Inquiries concerning this innovation may be directed to:

   Office of Industrial Cooperation
   Argonne National Laboratory
   9700 South Cass Avenue
   Argonne, Illinois 60439
   Reference: B67-10318

Source: W. K. Brookshier,
Electronics Division
(ARG-276)

Patent status:

Inquiries about obtaining rights for commercial use of this innovation may be made to:

Mr. George H. Lee, Chief
Chicago Patent Group
U.S. Atomic Energy Commission
Chicago Operations Office
9800 South Cass Avenue
Argonne, Illinois 60439

NASA TECH BRIEF

NASA Tech Briefs are issued to summarize specific innovations derived from the U.S. space program, to encourage their commercial application. Copies are available to the public at 15 cents each from the Clearinghouse for Federal Scientific and Technical Information, Springfield, Virginia 22151.

Vibration Analysis Utilizing Mossbauer Effect

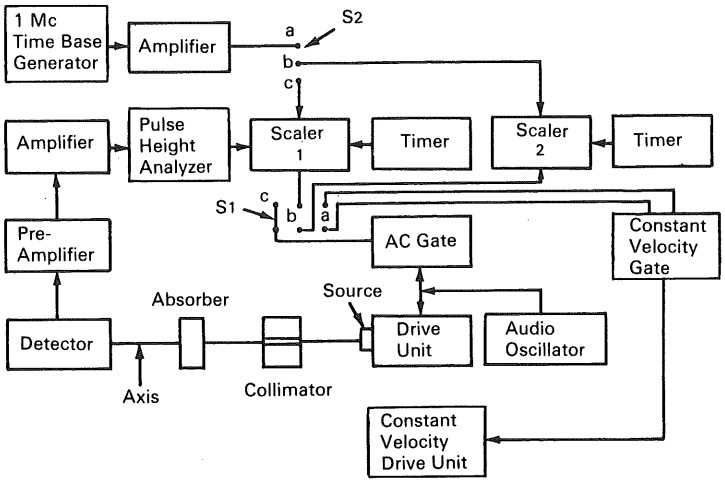

An instrument has been designed for the measurement of mechanical vibrations in transducers at amplitudes in the range of a few to 100 angstroms. Vibration measurements in this amplitude range cannot be accomplished by ordinary optical means. This instrument utilizes the Mossbauer effect, the phenomenon of the recoil-free emission and resonant absorption of nuclear gamma rays in solids, which was discovered by Rudolf L. Mossbauer in 1957.

The instrumental setup, shown in the diagram, includes a Mossbauer gamma ray source fixed to a drive unit consisting of a piezoelectric transducer, a standard collimator, a gamma ray absorber, and a detector. The detector is preferably a cleaved thallium-activated sodium iodide crystal with a 1 mil beryllium window mounted on a standard photomultiplier tube. The drive unit is energized by a standard audio oscillator, which is also connected to the ac gate control system. The detector, responsive to the gamma rays emitted by the source, is connected through the amplifiers to a pulse height analyzer. The output of the analyzer is connected to scaler 1. The output of the ac gate is connected through contacts b-c of switch S1 to both scalers, which are connected to timers. However, neither timer is operative during ac gate operation. The time base generator is connected through an amplifier and contacts b-c of switch S2 during ac gate operation to scaler 2 to obtain a time base count measure. The total time during which scaler 2 is actuated by the gate pulse may be accurately determined in terms of the number of timing pulses counted by scaler 2. Thus, the number of counts per unit of time received by scaler 1 through the pulse height analyzer may be accurately measured.

The source used was cobalt-57 diffused into a palladium matrix. The 14.4 keV gamma ray, which exhibits Mossbauer behavior, arises from the first excited state of iron-57, the daughter product of

(continued overleaf)

This document was prepared under the sponsorship of the National Aeronautics and Space Administration. Neither the United States Government nor any person acting on behalf of the United States Government assumes any liability resulting from the use of the information contained in this document, or warrants that such use will be free from privately owned rights.

cobalt-57. When the absorber is composed of unexcited iron-57 in palladium, full resonance absorption can occur; i.e., maximum absorption occurs for zero relative velocity between source and absorber. If the absorbing iron-57 is diffused in stainless steel, partial resonance occurs; i.e., the ground state of the absorber is shifted with respect to the ground state of the source. For this case (partial resonance), the zero velocity count corresponds to some point intermediate to resonance absorption and nonresonance absorption. If the absorbing iron is in a chemical compound, e.g., $FeSO_4 \cdot 7H_2O$ in which the iron nucleus resides in a local electric field, the excited state is split into two components. In this case two absorption maxima are found at proper relative velocities (quadrupole split resonance). If the absorber is composed of raw iron, the nucleus is influenced by the presence of a local magnetic field, thereby splitting the excited state into four components and the ground state into two components. This case results in six resonance absorption lines due to the Zeeman effect. The instrument utilizes these phenomena for analyzing vibration. A theoretical method for utilizing each case was established and experimentally verified.

Note:

A discussion of this development is given in "The Mossbauer Effect and Its Application to Measuring Technology", by Helmut G. Lackner, NASA SP-132, for sale by the U.S. Government Printing Office, Washington, D.C. 20402; price $1.00. Inquiries may also be directed to:

Technology Utilization Officer
Marshall Space Flight Center
Huntsville, Alabama 35812
Reference: B67-10339

Patent status:

No patent action is contemplated by NASA.

Source: Norbert A. Roughton
(MFS-11974)

AEC-NASA TECH BRIEF

AEC-NASA Tech Briefs describe innovations resulting from the research and development program of the U.S. AEC or from AEC-NASA interagency efforts. They are issued to encourage commercial application. Tech Briefs are published by NASA and may be purchased, at 15 cents each, from the Clearinghouse for Federal Scientific and Technical Information, Springfield, Virginia 22151.

Limit Circuit Prevents Overdriving of Operational Amplifier

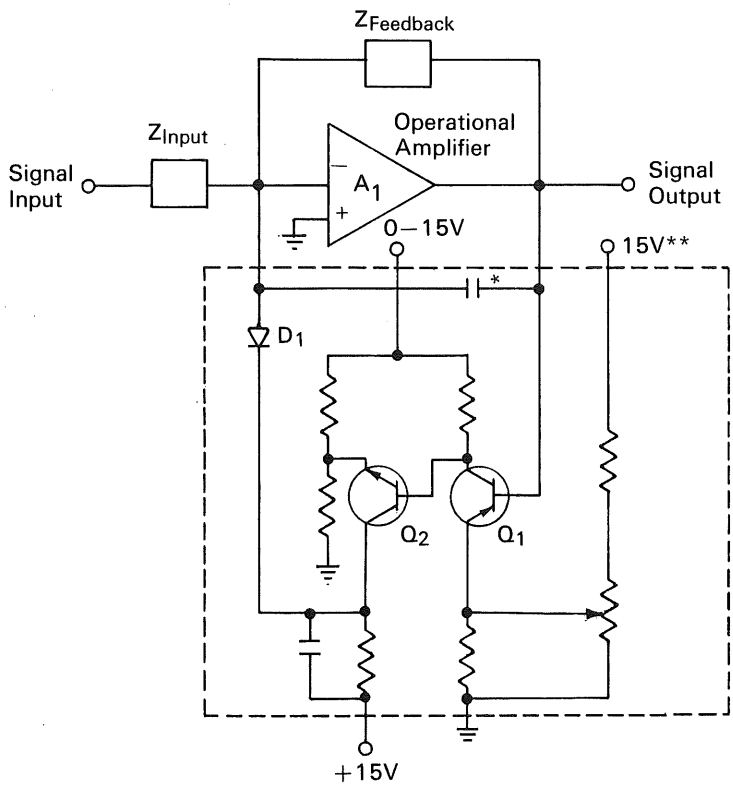

* Size Depends on Amplifier and $Z_{Feedback}$ (Capacitor May Not be Needed)

** Polarity Is Dependent on Signal Output Being +or —Relative to Ground Reference

The problem:

To design a circuit for use with an operational amplifier that limits the output from exceeding a desired value. A standard 15-volt powered transistorized operational amplifier will usually hold the output to within 0.3 to 0.5 volt of a desired limit by means of a simple diode clamp even though the input is being overdriven. It was required to have an operational amplifier having a hard limit, e.g., one whose output is clamped to within 0.002 volt of a desired set limit.

The solution:

A cutoff-type high gain amplifier coupled by a diode around the operational amplifier.

How it's done:

The gain of the feedback circuit (as shown) is high, and whenever the output of the amplifier reaches a preset limit, any excess is amplified and fed back to the input side of the amplifier. The amplified feedback signal offsets the excess input signal that tends to cause the amplifier to exceed its preset limit. The output is, therefore, held to the set clamp level.

(continued overleaf)

This document was prepared under the sponsorship of the Atomic Energy Commission and/or the National Aeronautics and Space Administration. Neither the United States Government nor any person acting on behalf of the United States Government assumes any liability resulting from the use of the information contained in this document, or warrants that the use of any information, apparatus, method, or process disclosed in this document may not infringe privately owned rights.

Notes:

1. The circuit limits output to less than 2 mv for a 14-volt overdrive on the input.
2. The illustration shows a negative going signal output clamp. For a positive going signal output clamp, Q_1 and Q_2 should be interchanged and the diode polarity D_1 reversed.
3. Inquiries concerning this innovation may be directed to:

   Technology Utilization Officer
   AEC–NASA Space Nuclear Propulsion Office
   U.S. Atomic Energy Commission
   Washington, D.C. 20545
   Reference: B67-10343

Patent status:

No patent action is contemplated by NASA or AEC.

Source: F. L. Openshaw
of Aerojet-General Corp.
under contract to
AEC–NASA Space Nuclear Propulsion Office
(NUC-10082)

AEC-NASA TECH BRIEF

AEC-NASA Tech Briefs describe innovations resulting from the research and development program of the U.S. AEC or from AEC-NASA interagency efforts. They are issued to encourage commercial application. Tech Briefs are published by NASA and may be purchased, at 15 cents each, from the Clearinghouse for Federal Scientific and Technical Information, Springfield, Virginia 22151.

Current Pulse Amplifier Transmits Detector Signals with Minimum Distortion and Attenuation

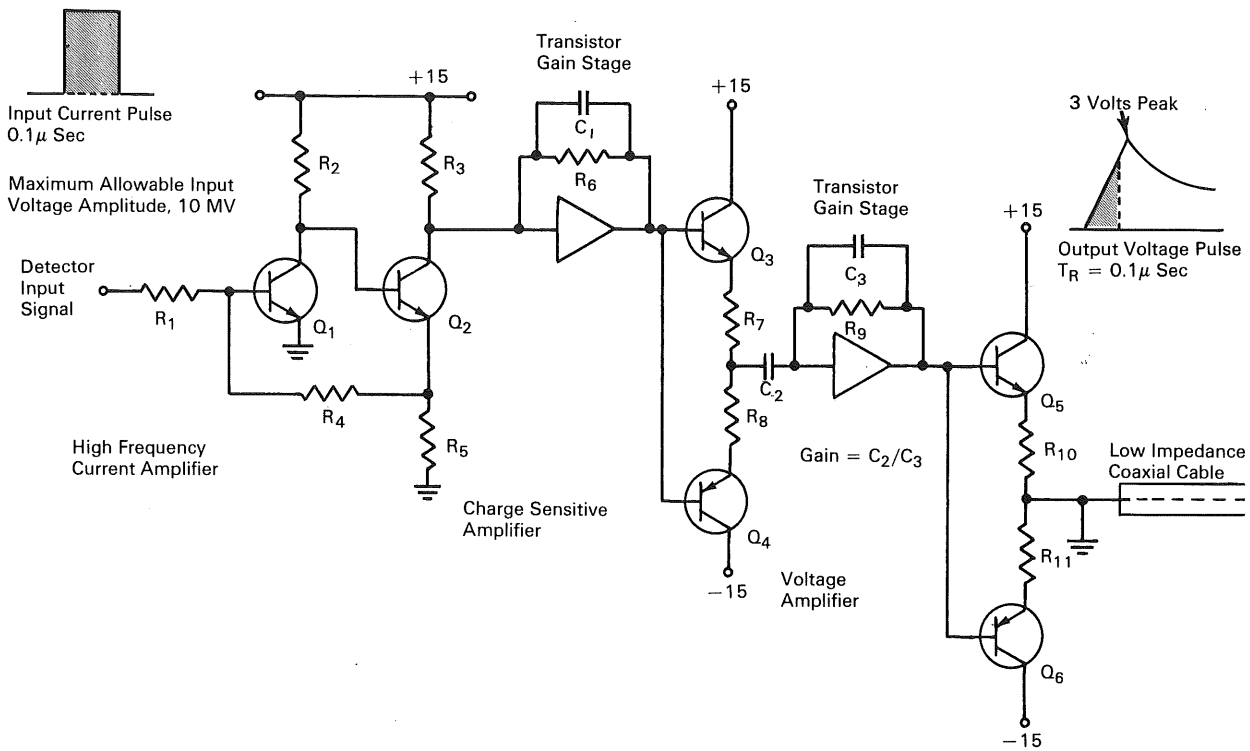

The problem:

To amplify current pulses from a boron-trifluoride neutron sensitive detector located adjacent to a nuclear reactor. The current pulses must be sent over a coaxial cable several hundred feet in length to the amplifier with negligible distortion. The amplifier output must be transmitted over the cable with minimum loss of pulse amplitude at counting rates of 100 kHz.

The solution:

An amplifier that translates the square pulses generated by the neutron detector to slower, long exponential decay pulses. These pulses can be transmitted over long coaxial cables with minimum distortion and loss of frequency.

How it's done:

The pulse amplifier consists of three modules. The high frequency current amplifier module serves as a

(continued overleaf)

This document was prepared under the sponsorship of the Atomic Energy Commission and/or the National Aeronautics and Space Administration. Neither the United States Government nor any person acting on behalf of the United States Government assumes any liability resulting from the use of the information contained in this document, or warrants that the use of any information, apparatus, method, or process disclosed in this document may not infringe privately owned rights.

preamplifier for the boron trifluoride detector. It utilizes a dc coupled feedback double, comprised of two transistors and associated components. The overall current gain of this module is about 4.5, and the bandwidth is of the order of 10 MHz. This bandwidth permits amplification of narrow pulses (100 nanoseconds) without distortion.

The charge sensitive amplifier module produces an output voltage pulse having an amplitude which is proportional to both the magnitude and duration of the input current pulse. The voltage amplifier module shapes the output pulse so that it has a decay time of about 5 microseconds and drives the low impedance coaxial cable.

Notes:

1. Signals have been transmitted satisfactorily over several hundred feet of RG-59/M cable (0.242 inch diameter).
2. This circuit may be useful in high counting rate applications.
3. Inquiries concerning this innovation may be directed to:

   Technology Utilization Officer
   AEC–NASA Space Nuclear Propulsion Office
   U.S. Atomic Energy Commission
   Washington, D.C. 20545
   Reference: B67-10347

Patent status:

No patent action is contemplated by AEC or NASA.

Source: N. E. Bush
of the Westinghouse Astronuclear Laboratory
under contract to
AEC–NASA Space Nuclear Propulsion Office
(NUC-10055)

NASA TECH BRIEF

NASA Tech Briefs are issued to summarize specific innovations derived from the U.S. space program, to encourage their commercial application. Copies are available to the public at 15 cents each from the Clearinghouse for Federal Scientific and Technical Information, Springfield, Virginia 22151.

Field Effect Transistors Improve Buffer Amplifier

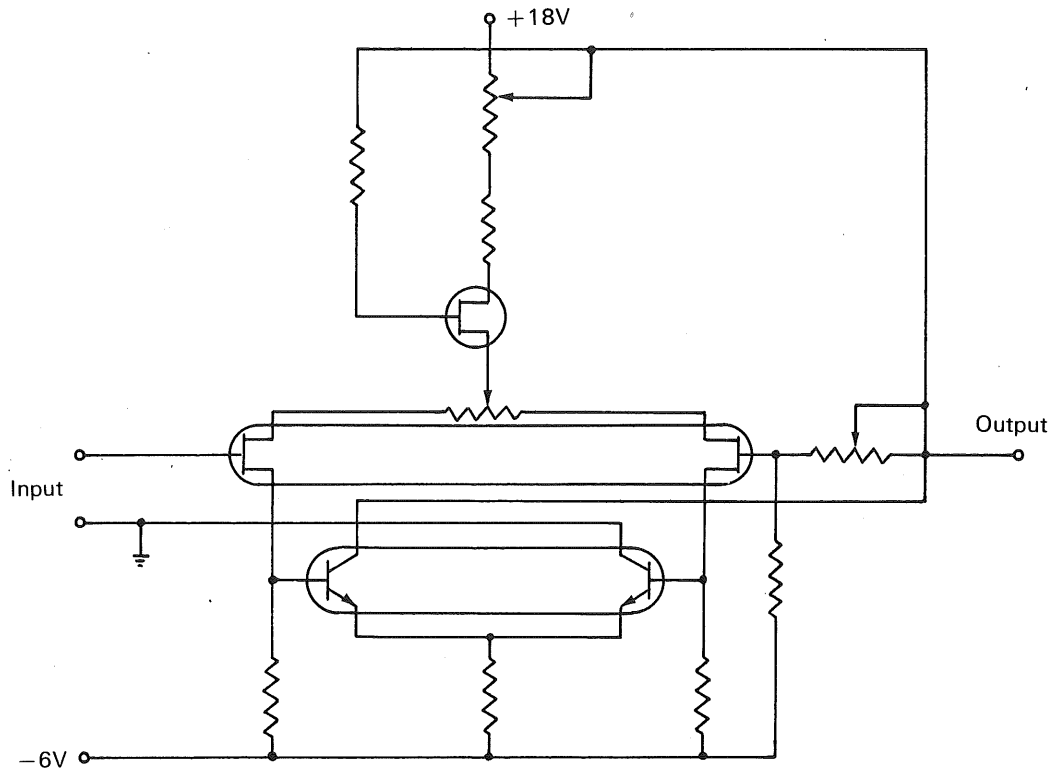

The problem:

To achieve a buffer amplifier with an input current of 0.1 microamp maximum at −20°C, it is necessary to use a Darlington connection at the input differential stage to the amplifier. Such an arrangement causes collector current to be so low that serious degradation in the gain-bandwidth product of the transistors results in poor performance of the buffer amplifier. Therefore, a basic tradeoff must be made between input current and bandwidth for any stable dc amplifier using bipolar transistors.

The solution:

A unity gain buffer amplifier with a field effect transistor (FET) differential input stage that responds much faster than bipolar transistors when operated at low current levels. The circuit illustrated uses a dual FET in a unity gain buffer amplifier having extremely high input impedence, low bias current requirements, and wide bandwidth. Input bias current is less than 10^{-8} amps maximum and bandwidth exceeds 2 mc while measured offset stability is −4mv at −20°C and +5mv at 85°C.

(continued overleaf)

This document was prepared under the sponsorship of the National Aeronautics and Space Administration. Neither the United States Government nor any person acting on behalf of the United States Government assumes any liability resulting from the use of the information contained in this document, or warrants that such use will be free from privately owned rights.

Notes:

1. Adequate gain stability will be realized with this circuit only through use of a very stable constant current source.
2. Inquiries concerning this innovation may be directed to:

   Technology Utilization Officer
   Marshall Space Flight Center
   Huntsville, Alabama 35812
   Reference: B67-10334

Patent status:

No patent action is contemplated by NASA.

Source: Dynatronics, Inc.
under contract to
Marshall Space Flight Center
(M-FS-916)

NASA TECH BRIEF

NASA Tech Briefs are issued to summarize specific innovations derived from the U.S. space program, to encourage their commercial application. Copies are available to the public at 15 cents each from the Clearinghouse for Federal Scientific and Technical Information, Springfield, Virginia 22151.

Reparable, High-Density Microelectronic Module Provides Effective Heat Sink

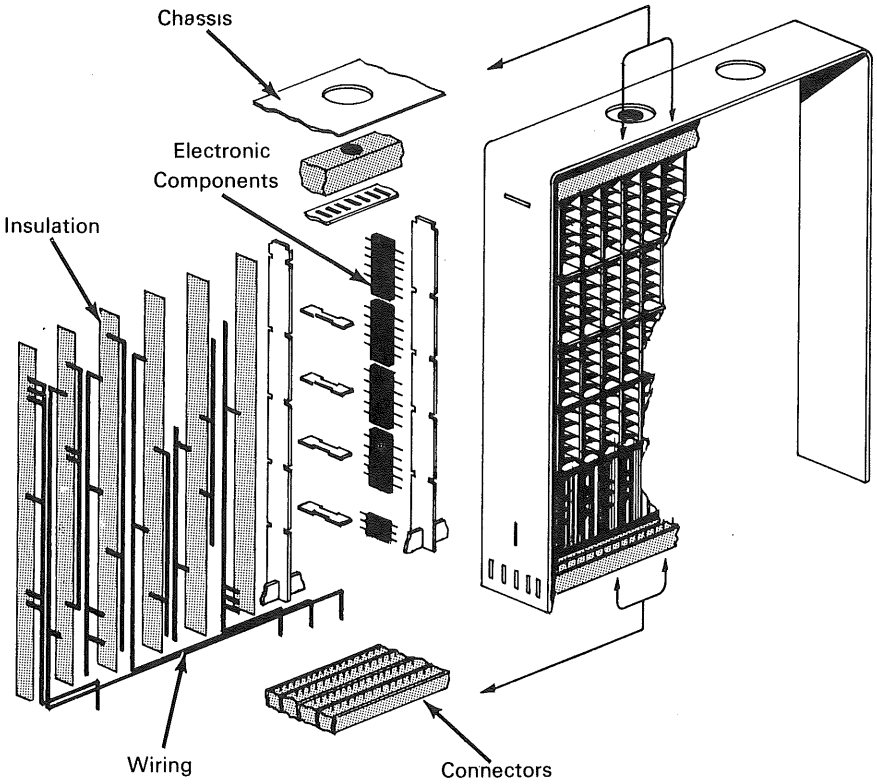

The problem:

To develop a readily reparable modular system for packaging microelectronic flat packs and miniature discrete components that will provide an effective heat sink for electric power dissipation in the absence of convective cooling means. The package must be light in weight, rugged, of simple construction, and be compatible with other miniature, discrete electronic components.

The solution:

A three-dimensional compartmented structure incorporating etched phosphor bronze sheets and frames with etched wire conductors.

How it's done:

The module compartments and frame are made of etched spring tempered, thin gage, phosphor bronze sheets. A tabs-and-slots method is used to assemble

(continued overleaf)

This document was prepared under the sponsorship of the National Aeronautics and Space Administration. Neither the United States Government nor any person acting on behalf of the United States Government assumes any liability resulting from the use of the information contained in this document, or warrants that such use will be free from privately owned rights.

the etched sheets into an easily fabricated and self-jigging rigid structure. The mechanical joints of the module compartments, module frame, and chassis are soldered to solidify the system.

To facilitate the subsequent solder-joining process, each etched part is first coated with solder. The small etched parts are then attached to each other and to a frame for ease in handling. These frames or sheets of etched parts are solder-coated by passing them through a wire mesh solder coater. The resulting thin, uniform coating of solder is sufficient to subsequently join the parts by simply heating the joints to cause the solder to flow together. The completed structure is not only rigid, strong, lightweight, and corrosion resistant, but also affords a good thermal path.

A master wiring comb was developed to facilitate the wiring layout and shorten fabrication time. The master wiring comb is used as a drafting master and the desired wiring runs for each layer of circuitry are colored on transparent acetate sheets. The unused fingers which result from a one-layer wiring run are clipped. Subsequent layers are clipped, according to the desired pattern, and laminated. The laminated runs are then assembled into the compartmented structure by adhesive bonding. The wiring runs are welded or soldered to the connector.

These flat packs are installed in the modular system by inserting them into the designated compartments. They are aligned with the corresponding flat wire finger which protrudes from the flat wire assembly and connected by pulse soldering to enable later repairs. The individual leads can be pulse-soldered or multiple-soldered by the use of a resistance soldering device, which contacts five leads at a time. The flat packs and flat wiring assembly leads are pretinned to eliminate the need for additional solder or flux in the soldering process.

Notes:

1. The round component leads from microminiature components require pretinning for effective use of pulse soldering.
2. Large, bulkier components, such as miniature transformers, can be used in the module by clipping out frame members during assembly.
3. Inquiries concerning this innovation may be directed to:

   Technology Utilization Officer
   Marshall Space Flight Center
   Huntsville, Alabama 35812
   Reference: B67-10356

Patent status:

No patent action is contemplated by NASA.

Source: F. F. Maytone and K. J. Carlson
of The Boeing Company
under contract to
Marshall Space Flight Center
(MFS-13075)

NASA TECH BRIEF

NASA Tech Briefs are issued to summarize specific innovations derived from the U.S. space program, to encourage their commercial application. Copies are available to the public at 15 cents each from the Clearinghouse for Federal Scientific and Technical Information, Springfield, Virginia 22151.

Digital-to-Analog Converter Operates from Low Level Inputs

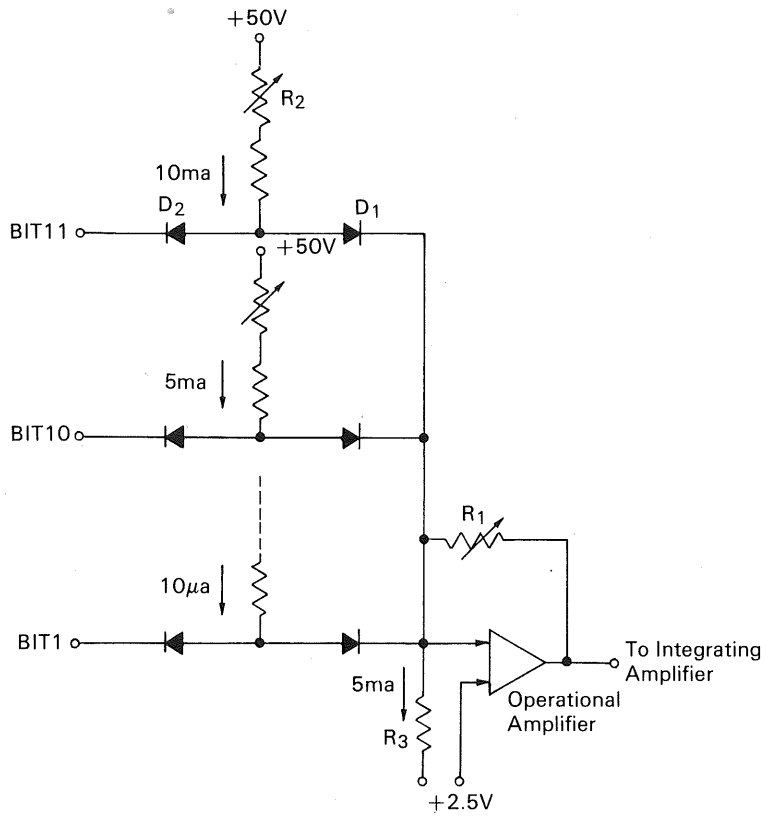

The problem:

To control a voltage controlled oscillator from computer output binary data representing a rate at which the oscillator is to change. The computer derived rate number is held in a buffer that is periodically read out into a digital-to-analog (D/A) converter. The buffer register uses integrated circuits not capable of driving conventional D/A converter circuits without prior amplification.

The solution:

A circuit that operates with low level output devices such as integrated circuit registers and devices with somewhat variable output levels. Normal transition level is +2.5v so that if the flip-flop register output voltage at any binary order position is less positive than +2.5v, the "zero" state exists at the input to the D/A converter; if the register output voltage is more positive than +2.5v, the "one" state exists.

(continued overleaf)

This document was prepared under the sponsorship of the National Aeronautics and Space Administration. Neither the United States Government nor any person acting on behalf of the United States Government assumes any liability resulting from the use of the information contained in this document, or warrants that such use will be free from privately owned rights.

How it's done:

A standard reference power supply of 50v is used for the reference source. By means of selected resistors in the input branches, the current in each succeeding branch from bit 1 to bit 11 is doubled as an initial calibration of the current input to the operational amplifier.

As the illustration shows, the converter contains multiple binary scaled current sources (bits 1 through 11) that are summed by the operational amplifier. Each of these sources has two steering diodes, D_1 and D_2. Diode D_1 directs current flow to the operational amplifier and D_2 directs current flow to the driving circuit. If the input voltage is less positive than +2.5v, current is steered by D_2 away from the operational amplifier and into the driving circuit. If the input voltage is more positive than +2.5v, D_2 is back biased and D_1 steers the current into the operational amplifier where its binary value contributes to the output dc voltage. Amplifier gain is adjusted by R_1 from +5v to −5v over the complete range of code inputs. Bias is set for a constant +2.5v at the amplifier input by external means. The D/A converter is calibrated by adjusting R_2 in each branch for monotonic operation.

A major portion of drift and voltage uncertainty versus temperature variation is due to the variable voltage drop across the steering diodes leading to the operational amplifier. For example, in the most significant bit position, a 50 mv change is equivalent to one whole code increment change. This effect diminishes by a factor of two for each successive lower order bit position. To minimize this condition, the operational amplifier steering diodes in the four most significant bit positions (bits 8, 9, 10, and 11) are metal silicon hot carrier diodes with low barrier potential to minimize drift due to temperature variation. The voltage drop temperature coefficient of these diodes approaches zero for currents in the vicinity of 10 ma. At low currents the temperature coefficient is much less than that of the silicon junction diodes used in the other steering positions.

Notes:

1. The low level operational capability of this D/A converter makes it suitable for commercial computer and control applications involving integrated circuitry.
2. Inquiries concerning this innovation may be directed to:

   Technology Utilization Officer
   Jet Propulsion Laboratory
   4800 Oak Grove Drive
   Pasadena, California 91103
   Reference: B67-10357

Patent status:

No patent action is contemplated by NASA.

Source: Robin A. Winkelstein
(JPL-907)

NASA TECH BRIEF

NASA Tech Briefs are issued to summarize specific innovations derived from the U.S. space program, to encourage their commercial application. Copies are available to the public at 15 cents each from the Clearinghouse for Federal Scientific and Technical Information, Springfield, Virginia 22151.

Test Device Prevents Weld Joint Damage by Eliminating Axial Pin Forces on Unpotted Modules

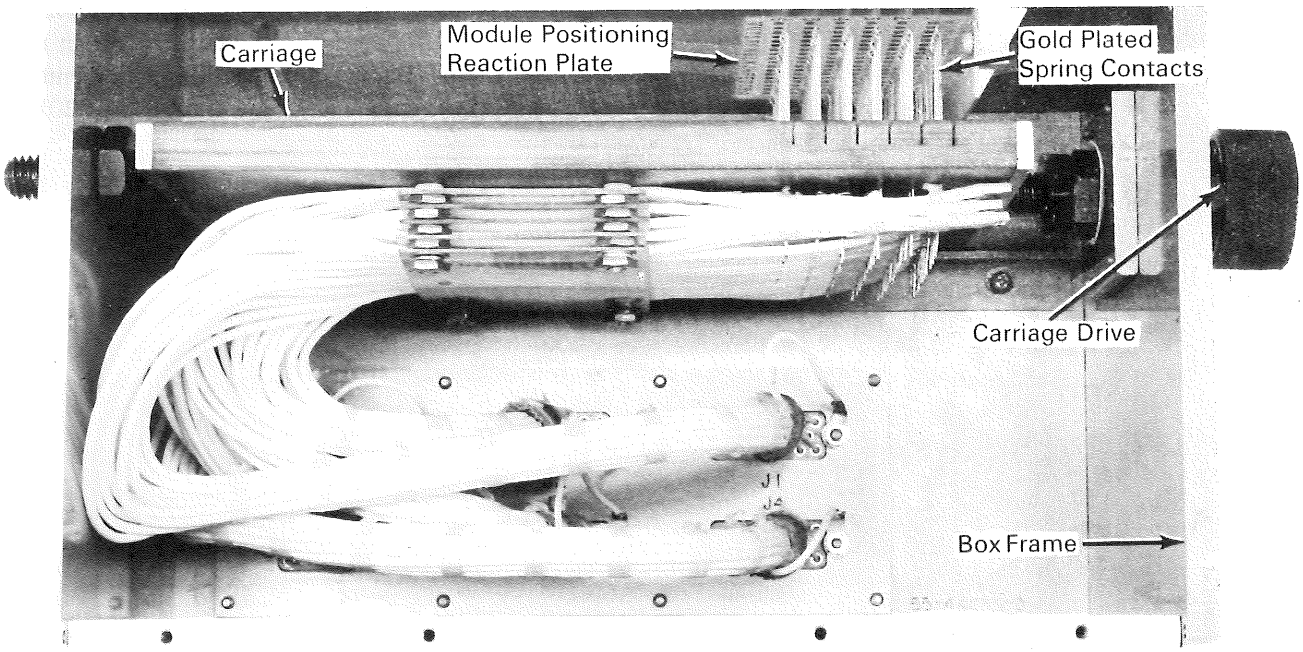

The problem:

To design a device for testing unpotted electronic modules that will prevent weld joint damage by eliminating axial or displacing forces on connector pins.

The solution:

A test device designed to make electrical connection to pins on unpotted modules which do not introduce any displacing forces of the pins. The pins are spaced in a potting header, but are free to slide in and out except for restraint from welded wire joints. The device consists of a box frame, a carriage with gold plated phosphor bronze contact springs, a module positioning reaction plate, carriage drive, stops, wiring, and miscellaneous hardware.

How it's done:

The carriage holds the contact springs in a matrix identical to the module pin matrix and the positioning plate matrix. With the carriage in the retracted position, the springs are completely clear of the positioning plate holes. The holes are slightly larger than the

(continued overleaf)

This document was prepared under the sponsorship of the National Aeronautics and Space Administration. Neither the United States Government nor any person acting on behalf of the United States Government assumes any liability resulting from the use of the information contained in this document, or warrants that such use will be free from privately owned rights.

unpotted module pins and thus the pins may enter without force.

Advancing the carriage with the drive screw (approximately 0.05 inch) brings the springs into contact with the pins immediately below the positioning plate (approximately 0.1 inch) which prevents the module pins from moving away. A mechanical stop prevents carriage overtravel and allows a controlled spring pressure on the module pins.

Notes:

1. The contact springs are wired to standard connectors for the interface with test equipment.
2. The position of the contact springs allows testing of unpotted modules with pins extending only 0.25 inch or modules with pins up to 1.0 inch.
3. Inquiries concerning this innovation may be directed to:

   Technology Utilization Officer
   Lewis Research Center
   21000 Brookpark Road
   Cleveland, Ohio 44135
   Reference: B67-10359

   or

   New Technology Representative
   General Dynamics/Convair Division
   Mail Zone 103-19
   5001 Kearny Villa Road
   San Diego, California 92112
   Reference: B67-10359

Patent status:

No patent action is contemplated by NASA.

Source: R. E. Cree
of General Dynamics/Convair
under contract to
Lewis Research Center
(LEW-10201)

NASA TECH BRIEF

NASA Tech Briefs are issued to summarize specific innovations derived from the U.S. space program, to encourage their commercial application. Copies are available to the public at 15 cents each from the Clearinghouse for Federal Scientific and Technical Information, Springfield, Virginia 22151.

Pocket-Size Manual Tape Reader Device Aids Computer Tape Checking

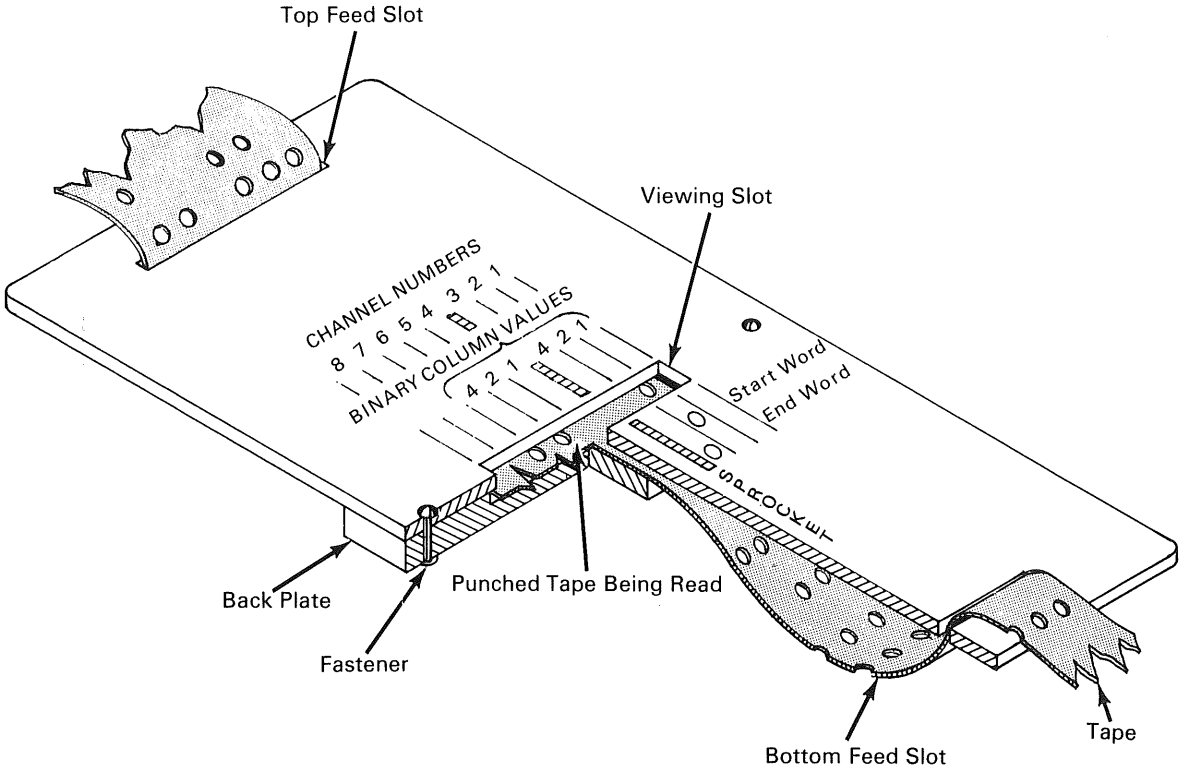

The problem:

Manually reading, interpreting, and correcting binary and octal coded punched tapes is extremely difficult due to the small size of the holes and their close proximity. Code information, such as channel numbers, binary values of each significant channel, sprocket channel, codes for the beginning and ending of words, etc., on the unmarked tape must be constantly kept in mind for correct reading and interpretation. When manually verifying a documented input with the punched tape, it is difficult to maintain line and hole position on the tape while the eyes and fingers are moving between the documented input and the tape.

The solution:

A pocket-size plastic manual tape reader device has been developed to isolate and display a line of coded information so that it may be easily read and verified.

How it's done:

The tape is fed into the bottom feed slot from front to back, slipped between the back plate and viewing slot, and then fed from the back plate through the top

(continued overleaf)

This document was prepared under the sponsorship of the National Aeronautics and Space Administration. Neither the United States Government nor any person acting on behalf of the United States Government assumes any liability resulting from the use of the information contained in this document, or warrants that such use will be free from privately owned rights.

feed slot from back to front. After insertion, the tape is pulled through the device until the desired line of punched holes appears in the viewing slot. With this device any line of tape can easily be read and verified by positioning it in the viewing slot.

Notes:

1. The coded information is more easily read if the color of the back plate contrasts sharply with that of the tape.
2. Code information may be arranged to meet the needs of any program on a punched computer tape.
3. Inquiries concerning this invention may be directed to:

   Technology Utilization Officer
   Kennedy Space Center
   Kennedy Space Center, Florida 32899
   Reference: B67-10361

Patent status:

Inquiries about obtaining rights for the commercial use of this invention may be made to NASA, Code GP, Washington, D.C. 20546.

Source: Felix L. Odle
of The Boeing Company
under contract to
Kennedy Space Center
(KSC-10058)

NASA TECH BRIEF

NASA Tech Briefs are issued to summarize specific innovations derived from the U.S. space program, to encourage their commercial application. Copies are available to the public at 15 cents each from the Clearinghouse for Federal Scientific and Technical Information, Springfield, Virginia 22151.

Movable RF Probe Eliminates Need for Calibration in Plasma Accelerators

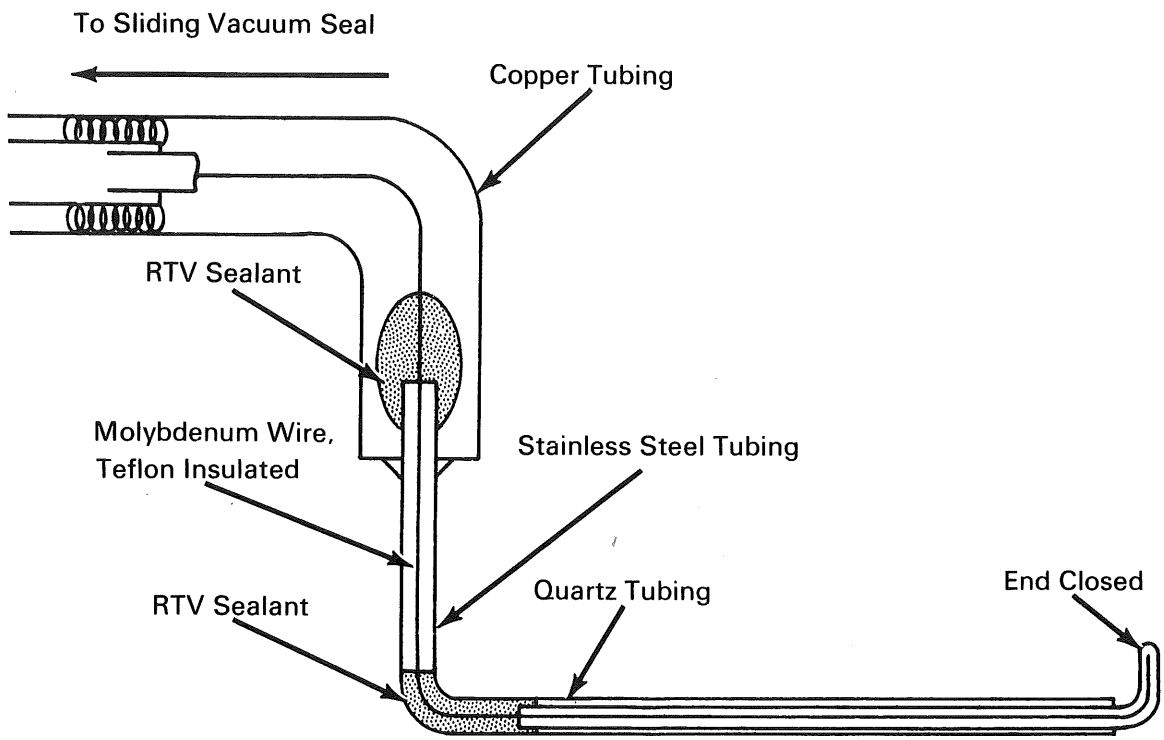

The problem:

To evaluate the basic processes in some plasma accelerators, it is necessary to know the absorption and propagation characteristics of the driving electromagnetic field throughout the interaction region. It is also necessary to know the rf field level within and in front of the calorimeter to determine the extent to which the calorimeter heating is due to power absorbed from the rf wave directly within the calorimeter.

Previous techniques to map the rf wave profile utilized antennas fixed in the accelerator walls. These fixed probes were antenna wires separated from the plasma by quartz covers and responded to the rf electric field in the vicinity of the probe. The induced signal was rectified through a crystal detector and then recorded on a chart recorder. Although attempts were made to make all probes identical, they did not have identical sensitivities and had to be calibrated before they could be used on a comparative basis.

The solution:

A movable rf antenna probe that can continuously map the rf field both within and beyond the accelerator.

(continued overleaf)

This document was prepared under the sponsorship of the National Aeronautics and Space Administration. Neither the United States Government nor any person acting on behalf of the United States Government assumes any liability resulting from the use of the information contained in this document, or warrants that such use will be free from privately owned rights.

How it's done:

The rf probe is basically a short wire antenna. To give the probe mobility, it is mounted on a motor actuated arm and is shielded from the plasma by a dielectric cover. The probe can be moved through the plasma along the system axis for continuous measurement through *and beyond* the plasma diameter. The high temperature molybdenum wire allows continuous use in high energy plasmas.

Since this is a single probe, there is no problem of probe dissimilarity.

Notes:

1. The use of this rf probe in plasma accelerators should eliminate the need for installing probes in the accelerator walls.
2. The moving rf probe can be used to map the rf electrical field under various accelerator conditions. The data from the moving probe can be interpreted more accurately than the fixed rf probes and their associated calibration problems. This type of probe can be useful in rf plasma interaction studies.
3. Inquiries concerning this innovation may be directed to:

   Technology Utilization Officer
   Lewis Research Center
   21000 Brookpark Road
   Cleveland, Ohio 44135
   Reference: B67-10362

Patent status:

No patent action is contemplated by NASA.

Source: D. B. Miller
of General Electric Co.
under contract to
Lewis Research Center
(LEW-10127)

NASA TECH BRIEF

NASA Tech Briefs are issued to summarize specific innovations derived from the U.S. space program, to encourage their commercial application. Copies are available to the public at 15 cents each from the Clearinghouse for Federal Scientific and Technical Information, Springfield, Virginia 22151.

System Automatically Provides Dynamic Launch Decision Criteria

A sophisticated management tool has been conceived to provide instantaneous criteria, derived from the parametric behavior of a complex system such as a space launch vehicle plus its payload, for the decision making of launch management personnel. In prelaunch (countdown) activities of an equipment system involving the real time analysis of myriad pressure, temperature, stress, strain, voltage, current, resistance, and other continuously monitored measurements, it is imperative that management, in the form of the least possible number of final decision makers, have immediate access to all conditions on a continuing basis.

The management tool in this case is known as the Saturn V Dynamic Launch Decision Criteria Model. The model consists of a computer-driven graphic display system capable of converting real time inputs from all launch vehicle/spacecraft systems into analytic data in a format consonant with the established practices of management personnel. Because many functions in the prelaunch activities are performed in parallel, this dynamic model is quite complex, but still lends itself to complete utility by a limited number of decision-making managers. The model does not itself make or even suggest decisions but rather displays continuously and in real time the events and conditions upon which the proper decisions can be made.

Notes:

1. While the instant model has been conceived for use with a space launch system, it provides real time data from a variety of inputs that are involved in terrestrial, industrial, and commercial complexes in everyday use.
2. Inquiries concerning this innovation may be directed to:

   Technology Utilization Officer
   Marshall Space Flight Center
   Huntsville, Alabama 35812
   Reference: B67-10363

Patent status:

No patent action is contemplated by NASA.

Source: J. E. Doig
of The Boeing Company
under contract to
Marshall Space Flight Center
(MFS-13063)

Category 01

This document was prepared under the sponsorship of the National Aeronautics and Space Administration. Neither the United States Government nor any person acting on behalf of the United States Government assumes any liability resulting from the use of the information contained in this document, or warrants that such use will be free from privately owned rights.

NASA TECH BRIEF

NASA Tech Briefs are issued to summarize specific innovations derived from the U.S. space program, to encourage their commercial application. Copies are available to the public at 15 cents each from the Clearinghouse for Federal Scientific and Technical Information, Springfield, Virginia 22151.

Transducer Measures Embedment Stresses in Electronic Modules

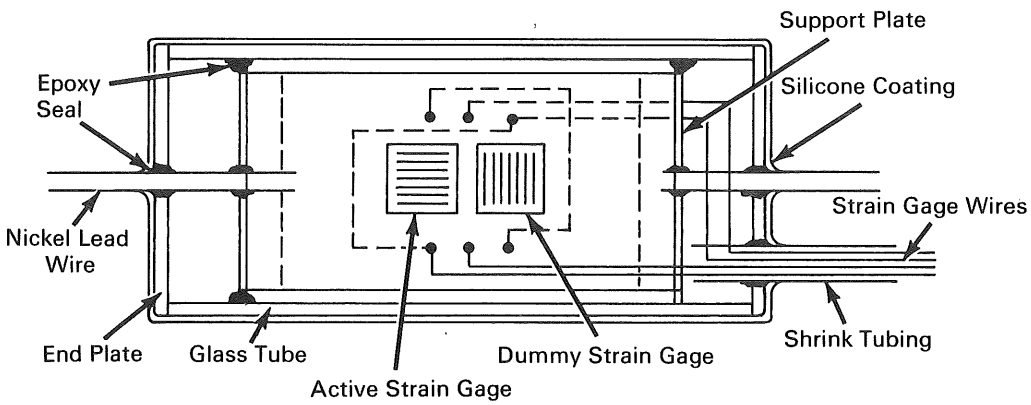

The problem:

To design a transducer that will measure axial embedment stresses in resins used for encapsulation of welded electronic modules. During the encapsulation (polymerization) process and subsequent thermal cycling, sensitive electronic components and interconnections within the modules may be degraded by the axial stresses developed within the encapsulating materials. These axial stresses produce longitudinal (compressive and tensile) forces along lead wires of encapsulated components. Prior measurements were based on tests with pressure transducers that did not simulate the configuration of typical discrete components with axial leads encapsulated in the modules.

The solution:

A strain gage load transducer that simulates the geometry of an actual electronic component with axial leads used in encapsulated modules. The transducer is calibrated mechanically and thermally to measure the longitudinal forces along the component lead wires.

How it's done:

The transducer consists of two strain gage units mounted on a stainless steel baseplate in a sealed glass tube. In order to eliminate bending effects and ensure accurate measurement of axial stresses, the two gage units (each unit constituting one active gage and one dummy or temperature-compensating gage) are mounted back-to-back on opposite surfaces of the baseplate. In each of the two units, the grid pattern of the active strain gage is mounted parallel to the lead wires. The gages are wired as a full bridge tension-loading unit. Polyolefin shrinkfit tubing is applied to the wire bundle. Support plates, which fit tightly inside the glass tube, keep the lead wires rigid to minimize the sensitivity of the tranducer to nonaxial loads. The support plates are bonded to the lead wires with an epoxy adhesive. The gage assembly is placed inside the glass tube and secured in place by bonding the support plate corners to the inner wall of the tube. The transducer is sealed with aluminum endplates at each end of the tube. At the completion of the assembly

(continued overleaf)

This document was prepared under the sponsorship of the National Aeronautics and Space Administration. Neither the United States Government nor any person acting on behalf of the United States Government assumes any liability resulting from the use of the information contained in this document, or warrants that such use will be free from privately owned rights.

operation, the transducer is baked for a minimum of 4 hours. The transducer (except for the wire leads) is then coated with a silicone resin. The cured silicone resin prevents encapsulation material (in subsequent tests) from adhering to the transducer body, thus isolating the transducer from any nonaxial loading effects.

Notes:

1. The transducer can be modified in size and shape to simulate various electronic components. It is designed to operate at temperatures from −100° to +200°F, and can be modified to operate at cryogenic temperatures.
2. Inquiries concerning design details and performance of the transducer may be directed to:

   Technology Utilization Officer
   Marshall Space Flight Center
   Huntsville, Alabama 35812
   Reference: B67-10367

Patent status:

Inquiries about obtaining rights for the commercial use of this invention may be made to NASA, Code GP, Washington, D.C. 20546.

Source: Martin H. Smith
of Douglas Aircraft Co., Inc.
under contract to
Marshall Space Flight Center
(MFS-13486)

NASA TECH BRIEF

NASA Tech Briefs are issued to summarize specific innovations derived from the U.S. space program, to encourage their commercial application. Copies are available to the public at 15 cents each from the Clearinghouse for Federal Scientific and Technical Information, Springfield, Virginia 22151.

Signal Generator Converts Direct Current to Multiphase Supplies

The problem:

Multiphase wave generators have been difficult to control in the past because the phases have been so closely interrelated that adjustment of the circuitry of one phase causes undesired changes in the other phases.

The solution:

A multiphase wave generator that uses multivibrators in a feedback control mode that produces output signal pairs that are impressed on the primary windings of inverter transformers sequentially with a 120° phase shift from each other.

How it's done:

The wave generator consists of a source of periodically varying control signals plus a set of multistable devices functioning as wave-generating elements switchable between two conductive conditions in response to predetermined gating signals that result from combined feedback signals of the multistable devices and periodically varying control signals. Sequentially correct gating to obtain the desired phase relation is dependent on the state of two phases relative to each other or with respect to the third and is not a function of the ring circuit type of connection as previously used. Proper gating of the multistable devices is accomplished without the use of capacitors, reactors, or transformers.

Notes:

1. Output transformers are used for phase isolation, load voltage increase, wave form shaping, and to provide a load related base current for the output transistors.
2. Inquiries concerning this invention may be directed to:

   Technology Utilization Officer
   Manned Spacecraft Center
   Houston, Texas 77058
   Reference: B67-10368

Patent status:

Inquiries about obtaining rights for the commercial use of this invention may be made to NASA, Code GP, Washington, D.C. 20546.

Source: John Baude
of Allis-Chalmers Manufacturing Company
under contract to
Manned Spacecraft Center
(MSC-11043)

Category 01

This document was prepared under the sponsorship of the National Aeronautics and Space Administration. Neither the United States Government nor any person acting on behalf of the United States Government assumes any liability resulting from the use of the information contained in this document, or warrants that such use will be free from privately owned rights.

NASA TECH BRIEF

NASA Tech Briefs are issued to summarize specific innovations derived from the U.S. space program, to encourage their commercial application. Copies are available to the public at 15 cents each from the Clearinghouse for Federal Scientific and Technical Information, Springfield, Virginia 22151.

Multiple Meter Monitoring Circuits Served by Single Alarm

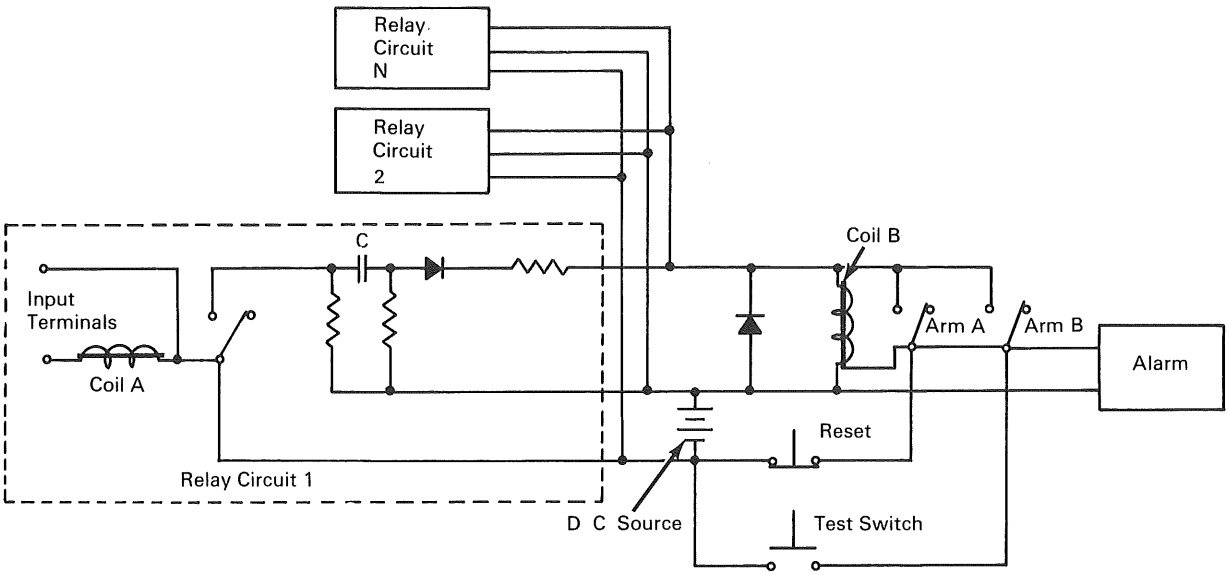

The problem:

Relay circuits are often used in series with instrumentation to trip an alarm when an out-of-tolerance condition arises. When several meter relay circuits are grouped together to monitor a number of critical parameters, continued warning capability must be maintained for the rest of the system while the relay acting in response to the out-of-tolerance condition is disconnected from the alarm.

The solution:

Circuitry that provides complete isolation for each of N relay circuits served by a single alarm and permits alarm reset after an out-of-tolerance event in one relay circuit so that the remaining relay circuits continue to be alarm protected.

How it's done:

Out-of-tolerance performance of a monitored component energizes its related relay circuit to connect a dc source to an alarm relay through an R-C circuit. The alarm, audible or visible or both, can be deactivated by a manual reset. Due to the R-C net in the meter relay circuit, the out-of-tolerance condition still existing in the meter relay circuit cannot cause the alarm relay to again be energized. Should an out-of-tolerance condition cause another meter relay to close, the alarm relay will again be energized.

In operation, a sufficient signal across the input terminals energizes coil A and connects the dc source across coil B. Arm B actuates the alarm and arm A supplies holding current to coil B from the dc source.

(continued overleaf)

This document was prepared under the sponsorship of the National Aeronautics and Space Administration. Neither the United States Government nor any person acting on behalf of the United States Government assumes any liability resulting from the use of the information contained in this document, or warrants that such use will be free from privately owned rights.

Manually operating the reset turns off the alarm by deenergizing coil B and though coil A remains energized the charge on the capacitor C prevents reenergizing of coil B. However an out-of-tolerance condition arising in the other relay circuits (2 through N) will energize coil B to start the alarm cycle again.

Note:

Inquiries concerning this invention may be directed to:

Technology Utilization Officer
Manned Spacecraft Center
Houston, Texas 77058
Reference: B67-10369

Patent status:

Inquiries about obtaining rights for the commercial use of this invention may be made to NASA, Code GP, Washington, D.C. 20546.

Source: Urbano Bandini
of Grumman Aircraft Engineering Corp.
under contract to
Manned Spacecraft Center
(MSC-10984)

NASA TECH BRIEF

NASA Tech Briefs are issued to summarize specific innovations derived from the U.S. space program, to encourage their commercial application. Copies are available to the public at 15 cents each from the Clearinghouse for Federal Scientific and Technical Information, Springfield, Virginia 22151.

Mechanical Properties of Wire Insulation Automatically Determined

Three separate mechanisms have been developed to test the insulation on electrical wire specimens for mechanical resistance to flexure, abrasion or wear, and vibration. An electromechanical drive with a 6-digit cycle counter is connected to the selected test mechanism. An automatic cutoff circuit stops the drive and counter when a break occurs in the wire insulation during a particular test.

Notes:

1. The test mechanisms were specially designed for performing the evaluation tests on insulated wire specimens in a chamber which can be controlled to simulate space or spacecraft cabin environments.
2. Inquiries concerning this invention may be directed to:

   Technology Utilization Officer
   Manned Spacecraft Center
   Houston, Texas 77058
   Reference: B67-10370

Patent status:

Inquiries about obtaining rights for the commercial use of this invention may be made to NASA, Code GP, Washington, D.C. 20546.

Source: W. L. Gill and F. S. Dawn
(MSC-10983)

Category 01

This document was prepared under the sponsorship of the National Aeronautics and Space Administration. Neither the United States Government nor any person acting on behalf of the United States Government assumes any liability resulting from the use of the information contained in this document, or warrants that such use will be free from privately owned rights.

NASA TECH BRIEF

NASA Tech Briefs are issued to summarize specific innovations derived from the U.S. space program, to encourage their commercial application. Copies are available to the public at 15 cents each from the Clearinghouse for Federal Scientific and Technical Information, Springfield, Virginia 22151.

Circuit Automatically Calibrates Flowmeter Against Liquid-Level Gage Reference

The problem:

To calibrate a turbine-type flowmeter, using the flow of liquid from a tank equipped with reed-type liquid-level switches as a calibration reference or standard. As the liquid level changes, a float carrying a ring magnet rides along the switch gage column and momentarily closes each of 40 reed switches located at known tank levels. The switches are divided into two groups of 20 parallel switches each. In order to allow identification of the switches, each switch is wired internally in series with one of four values of resistance. The resistors are sized according to an identification code which allows the identity of any switch in the tank to be determined by observing a minimum of two successive deflection amplitudes. The precise volume increment between any two switches in the tank is established by a separate calibration. The basic instrumentation problem is that of providing a circuit to generate a reliable and accurate gate signal, allowing the tank-level switches to control the flowmeter pulse count and corresponding time-count interval.

The solution:

The circuit consists of four stages: (1) an input and switch identification stage, (2) a monostable multivibrator, (3) a bistable multivibrator, and (4) a signal inverter and pulse output stage. The first stage conditions the signal from the liquid-level gage for transmission to the subsequent stages and to allow the deflection amplitude to be recorded externally for switch identification. The monostable multivibrator provides a clean (free of effects of multiple closures and bounce of switch contacts) input pulse which corresponds to the closure of a liquid-level switch. This signal is used to initiate the gate signal. The bistable multivibrator provides the two stable states, *open* and *close,* for the gate signal. This signal provides a decreasing voltage step as the gate transfers from *close* to *open*. Since the signal required to turn on the counters and timer is an increasing voltage step, the signal polarity must be inverted.

The initial state of the unit controls is: power *on* and sequence *start*. At the closure of the first level switch, the gate will *open,* allowing counting to start (as indicated by a green light). The gate may be set to close at any predetermined level switch by setting the sequence to *stop* after observing the closure of the preceding switch. The following switch closure will close the gate and terminate the count (as indicated by a red light). After recording the timer and counter readings, the timer and counters are reset to zero, and the entire cycle may be repeated as required. The switches that close at the known level increments are identified by evaluating the pattern of the signals recorded across the switch resistors. Comparison of the gate signal recordings with the identified switches provides a measure of the volumetric flow corresponding to the flowmeter signal count.

Note:

Inquiries concerning this innovation may be directed to:

Technology Utilization Officer
Marshall Space Flight Center
Huntsville, Alabama 35812
Reference: B67-10376

(continued overleaf)

This document was prepared under the sponsorship of the National Aeronautics and Space Administration. Neither the United States Government nor any person acting on behalf of the United States Government assumes any liability resulting from the use of the information contained in this document, or warrants that such use will be free from privately owned rights.

Patent status:

No patent action is contemplated by NASA.

Source: R. J. Field
of North American Aviation, Inc.
under contract to
Marshall Space Flight Center
(MFS-2194)

NASA TECH BRIEF

NASA Tech Briefs are issued to summarize specific innovations derived from the U.S. space program, to encourage their commercial application. Copies are available to the public at 15 cents each from the Clearinghouse for Federal Scientific and Technical Information, Springfield, Virginia 22151.

Flowmeter Determines Mix Ratio for Viscous Adhesives

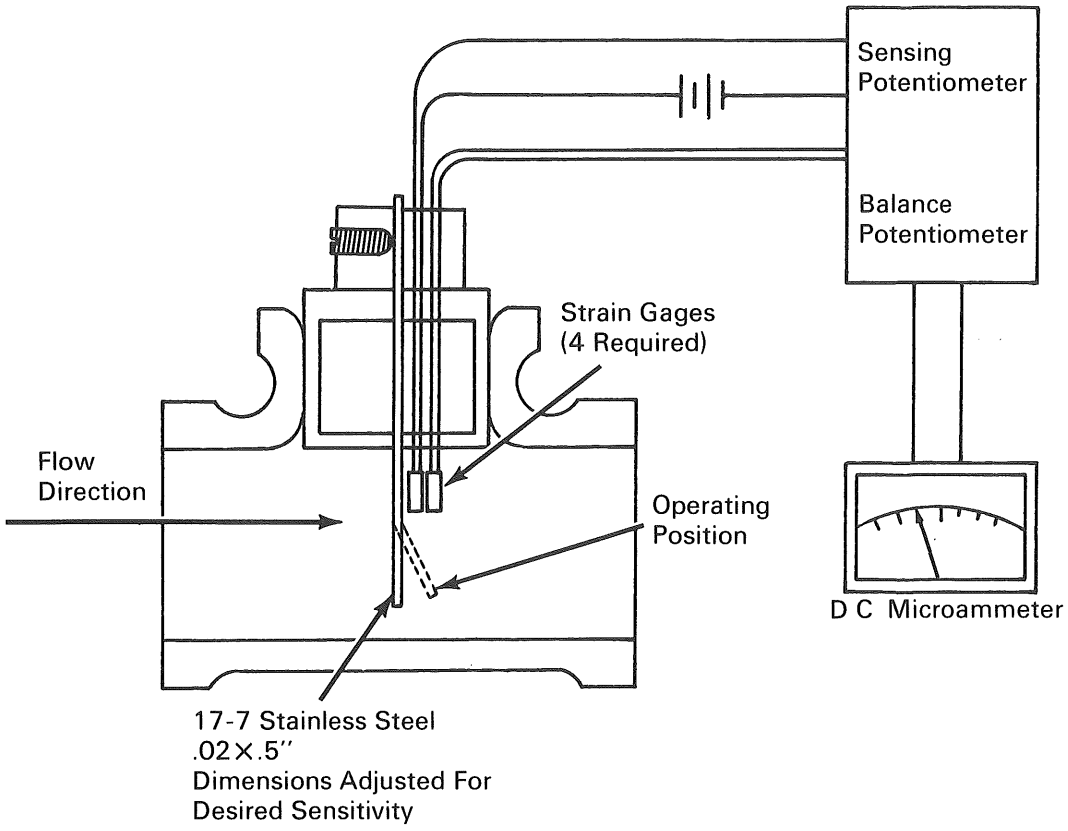

The problem:

A continuous flow mixing machine is used to produce a high viscosity adhesive that is formed from a high viscosity resin and aliphatic amine hardener pumped through separate lines to a rotary blender. Flow of the resin and hardener must be simultaneous, uniform, and in the precise mix ratio. Malfunction or flow irregularity in either line must be detected instantly or the adhesive will not develop the desired bond strength. The "gummy" nature of this filled epoxy adhesive renders conventional rotary type flowmeters ineffective.

The solution:

A system that uses strain gages in the two flow paths and monitors their outputs with appropriate instrumentation.

(continued overleaf)

This document was prepared under the sponsorship of the National Aeronautics and Space Administration. Neither the United States Government nor any person acting on behalf of the United States Government assumes any liability resulting from the use of the information contained in this document, or warrants that such use will be free from privately owned rights.

How it's done:

A strain gage is bonded to a thin steel blade that is then suspended, one each, inside the resin and hardener flow lines. As the viscous fluid flows through the lines, the blade deflection is sensed by the strain gage and registered on a microammeter through conventional electrical balance circuitry. Calibration of the microammeter readings by physical measurements of the adhesive product permits accurate continuous control of the hardener-to-resin ratio.

Notes:

1. This simple device can be readily installed in existing piping, can be easily protected against corrosive materials, and will operate satisfactorily from −423° to +600°F.
2. Inquiries concerning this innovation may be directed to:

   Technology Utilization Officer
   Marshall Space Flight Center
   Huntsville, Alabama 35812
   Reference: B67-10378

Patent status:

No patent action is contemplated by NASA.

Source: Carl R. Lemons
of Douglas Aircraft Company
under contract to
Marshall Space Flight Center
(MFS-2308)

NASA TECH BRIEF

NASA Tech Briefs are issued to summarize specific innovations derived from the U.S. space program, to encourage their commercial application. Copies are available to the public at 15 cents each from the Clearinghouse for Federal Scientific and Technical Information, Springfield, Virginia 22151.

Use of Color-Coded Sleeve Shutters Accelerates Oscillograph Channel Selection

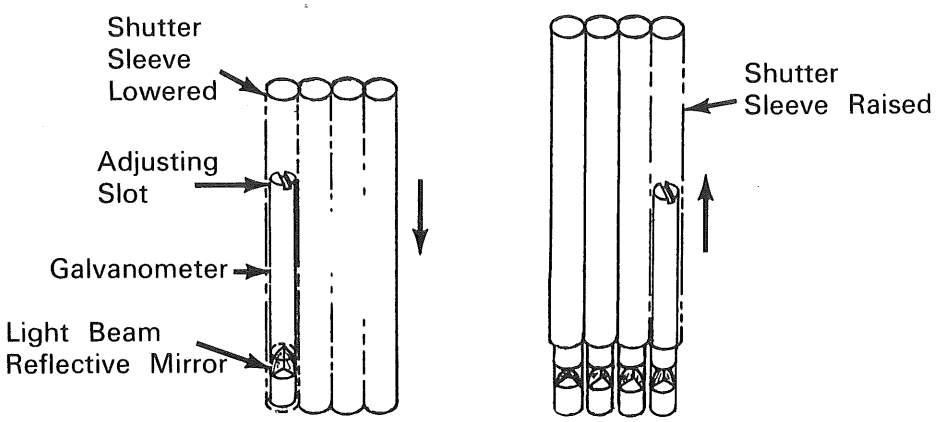

LIGHT BEAM BLOCKED LIGHT BEAM ADMITTED

The problem:

In conducting tests that require frequent or extensive oscillograph channel changes, much time is spent in manually adjusting individual galvanometer light beams onto or away from selected channels on the oscillograph paper.

The solution:

Sleeve-type shutters placed over each galvanometer. The galvanometer light beams are individually mechanically adjusted onto the oscillograph paper to insure proper channel separation and the shutters are raised or lowered to admit or block the light to the paper. In complex test setups, the sleeve-type shutters are color coded to separately identify each channel.

Notes:

1. This technique has been implemented with common drinking straws that have been color coded. It could be used on any commercially available equipment using tubular galvanometer light sources.
2. Inquiries concerning this invention may be directed to:

   Technology Utilization Officer
   Kennedy Space Center
   Kennedy Space Center, Florida 32899
   Reference: B67-10382

Patent status:

Inquiries about obtaining rights for the commercial use of this invention may be made to NASA, Code GP, Washington, D.C. 20546.

Source: Thomas Bouchlas and Frank W. Bowden of The Boeing Company under contract to Kennedy Space Center (KSC-10092)

Category 01

This document was prepared under the sponsorship of the National Aeronautics and Space Administration. Neither the United States Government nor any person acting on behalf of the United States Government assumes any liability resulting from the use of the information contained in this document, or warrants that such use will be free from privately owned rights.

NASA TECH BRIEF

NASA Tech Briefs are issued to summarize specific innovations derived from the U.S. space program, to encourage their commercial application. Copies are available to the public at 15 cents each from the Clearinghouse for Federal Scientific and Technical Information, Springfield, Virginia 22151.

Crack Growth Measured on Flat and Curved Surfaces at Cryogenic Temperatures

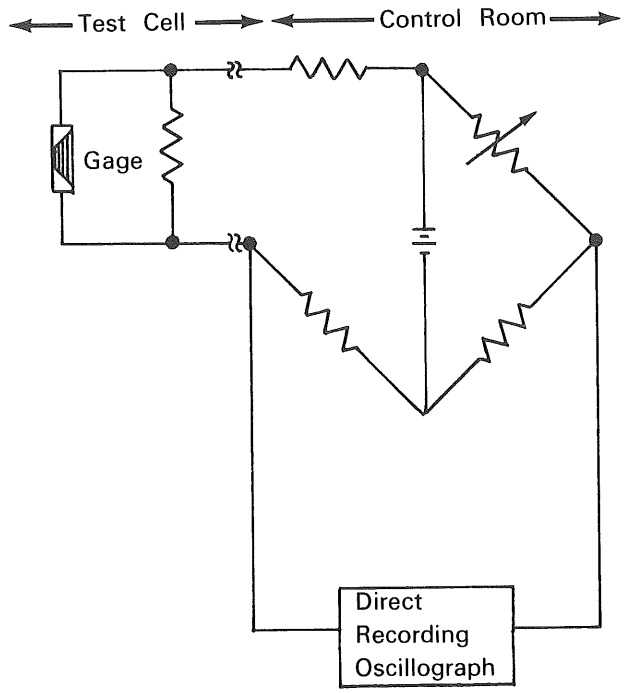

The problem:

Determination of the fracture toughness of a material requires knowledge of the crack length at the onset of rapid fracture or unstable crack growth. Cinematography, electrical potential measurement, and displacement (compliance) gaging have been used but become difficult or impractical when the test specimen is immersed in a cryogenic liquid or when a curved surface is involved, such as that of a cylindrical pressure vessel.

The solution:

A multiple element continuity gage for measuring plane stress crack growth plus surface crack growth under plane strain conditions.

How it's done:

The multiple element foil gage resembles a conventional foil gage but consists of 20 elements of high resistivity alloy foil physically and electrically in parallel. The gage is mounted on the test specimen at

(continued overleaf)

This document was prepared under the sponsorship of the National Aeronautics and Space Administration. Neither the United States Government nor any person acting on behalf of the United States Government assumes any liability resulting from the use of the information contained in this document, or warrants that such use will be free from privately owned rights.

the crack tip with the elements perpendicular to the expected direction of crack propagation, with the leading edge of the shortest filament at the tip of the crack. If the crack growth is expected to exceed the gage width, additional gages may be placed in tandem with the first.

The continuity gage is designed to be used with a 1.5-ohm shunt resistor. As the crack grows, the elements are broken, from the shortest to the longest in turn, and the resistance of the assembly increases in a finite and relatively linear stepwise manner. A resistance of 119 ohms is added in series to make the assembly compatible with existing 120-ohm bridge circuitry used for recording strain gage data. Bridge output is fed to a direct recording oscillograph along with an applied load signal.

Notes:

1. This gage has performed satisfactorily at −320° and −423°F with 301 stainless steel, 5 aluminum–2.5tin–titanium, and 2014-T6 aluminum sheet specimens and pressure vessels.
2. Inquiries concerning this innovation may be directed to:

   Technology Utilization Officer
   Lewis Research Center
   21000 Brookpark Road
   Cleveland, Ohio 44135
   Reference: B67-10384

Patent status:

No patent action is contemplated by NASA.

Source: Timothy L. Sullivan and Thomas W. Orange (LEW-389)

NASA TECH BRIEF

NASA Tech Briefs are issued to summarize specific innovations derived from the U.S. space program, to encourage their commercial application. Copies are available to the public at 15 cents each from the Clearinghouse for Federal Scientific and Technical Information, Springfield, Virginia 22151.

Continuous Wave Detector Has Wide Frequency Range

A small, portable, battery-operated detector, designed to monitor electronic equipment used in the Saturn II program, indicates the presence of steady state signals exceeding a predetermined value over a wide frequency range. The indication is provided by the closure of output relay contacts. The contact closure occurs and is maintained when the steady state input signal is within the frequency range from 400 Hz to 500 MHz and the amplitude of this signal exceeds a preset threshold voltage within the dynamic range of 1.0 millivolt to 3.0 volts rms. The threshold voltage is manually adjustable within the dynamic range of the detector. The frequency range of the detector is divided into two frequency bands: namely, an LF band extending from 400 Hz to 200 kHz and an HF band extending from 200 kHz to 500 MHz. Band selection is accomplished by a manually operated switch.

Note:

Inquries concerning this circuit may be directed to:
Technology Utilization Officer
Marshall Space Flight Center
Huntsville, Alabama 35812
Reference: B67-10386

Patent status:

Inquiries about obtaining rights for the commercial use of this invention may be made to NASA, Code GP, Washington, D.C. 20546.

Source: W. F. Deutsch,
S. J. Jarminski, and C. E. Wheatley
of North American Aviation, Inc.
under contract to
Marshall Space Flight Center
(MFS-1849)

Category 01

This document was prepared under the sponsorship of the National Aeronautics and Space Administration. Neither the United States Government nor any person acting on behalf of the United States Government assumes any liability resulting from the use of the information contained in this document, or warrants that such use will be free from privately owned rights.

NASA TECH BRIEF

NASA Tech Briefs are issued to summarize specific innovations derived from the U.S. space program, to encourage their commercial application. Copies are available to the public at 15 cents each from the Clearinghouse for Federal Scientific and Technical Information, Springfield, Virginia 22151.

Lamp Enables Measurement of Oxygen Concentration in Presence of Water Vapor

The problem:

To design an ultraviolet source lamp that will radiate sufficient energy at 1800 angstroms and 1470 angstroms for use in a double-beam, dual-wavelength oxygen sensor. This instrument determines the oxygen concentration in a gas mixture by measuring the absorption of ultraviolet radiation through the gas sampling cell at the two different wavelengths in order to eliminate the effects of ultraviolet absorption by water vapor. The source lamp was required to have the characteristics of small size, low input power, low-temperature operation, inherent ruggedness, and long life.

The solution:

An open-electrode lamp filled with xenon at a pressure of 100 mm of Hg. At this pressure, the lamp gives optimum output at 1800 angstroms and a sharp peak at 1470 angstroms. This sharp peak is useful in aligning the slits of the optical system.

Note:

Inquiries concerning this development may be directed to:

Technology Utilization Officer
Manned Spacecraft Center
Houston, Texas 77058
Reference: B67-10387

Patent status:

Inquiries about obtaining rights for the commercial use of this invention may be made to NASA, Code GP, Washington, D.C. 20546.

Source: F. J. Brisco, J. E. Moorhead, and W. S. Paige
of the Perkin-Elmer Corporation
under contract to
Manned Spacecraft Center
(MSC-10043)

Category 01

This document was prepared under the sponsorship of the National Aeronautics and Space Administration. Neither the United States Government nor any person acting on behalf of the United States Government assumes any liability resulting from the use of the information contained in this document, or warrants that such use will be free from privately owned rights.

NASA TECH BRIEF

NASA Tech Briefs are issued to summarize specific innovations derived from the U.S. space program, to encourage their commercial application. Copies are available to the public at 15 cents each from the Clearinghouse for Federal Scientific and Technical Information, Springfield, Virginia 22151.

Rugged Switch Responds to Minute Pressure Differentials

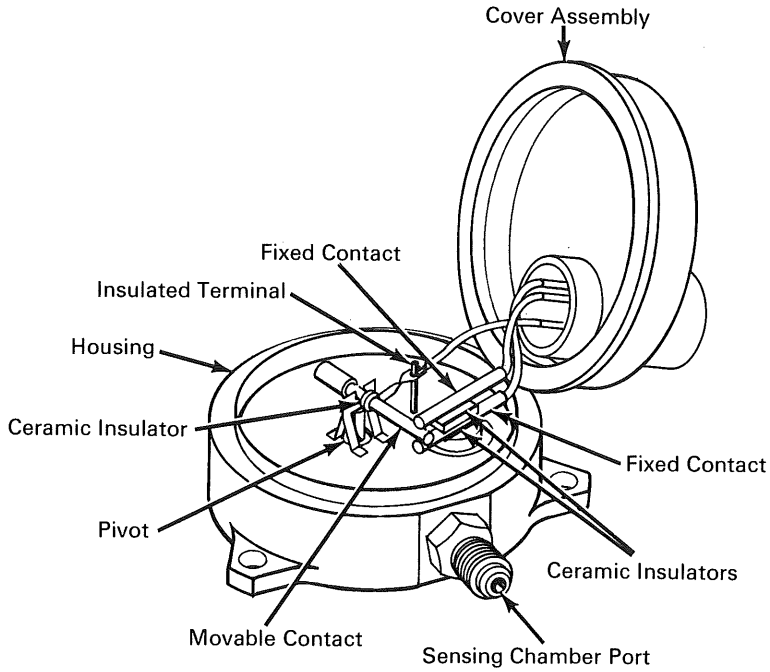

The problem:

To provide a pressure responsive switching device that exhibits high sensitivity but is extremely rugged and resistant to large amplitude shock and velocity loading. The device must meet stringent size and weight requirements and operate over a wide temperature range.

The solution:

A snap-action, single pole-double throw switch having a maximum 2.0 psi bandwidth over a range of −420° to 165°F with presettable actuation pressures from 20 to 45 psia. The switch is immune to vibration to 30 g's peak from 38 to 2,000 cps.

How it's done:

The switch is contained in a housing divided into two chambers, a pressure sensing chamber and a sealed chamber. The sealed chamber contains two fixed contacts mounted on ceramic insulators and a movable contact mounted on a spring steel pivot. The movable contact is in the form of a beam whose inboard end is attached to a link that passes through the sealed chamber floor into the sensing chamber where it is fastened to a sensing diaphragm.

When pressure in the sensing chamber drops below a selected threshold, the sensing diaphragm acts upon the link to pull down the inboard end of the movable

(continued overleaf)

This document was prepared under the sponsorship of the National Aeronautics and Space Administration. Neither the United States Government nor any person acting on behalf of the United States Government assumes any liability resulting from the use of the information contained in this document, or warrants that such use will be free from privately owned rights.

contact and cause its outboard end to rise and engage the upper fixed contact. Conversely, when pressure in the sensing chamber rises above a selected threshold, the diaphragm acts to raise the inboard end of the movable contact and cause its outboard end to engage the lower fixed contact. The fixed contacts are both magnetized to minimize contact bounce during a switching phase.

Note:

Inquiries concerning this invention may be directed to:

Technology Utilization Officer
Marshall Space Flight Center
Huntsville, Alabama 35812
Reference: B67-10389

Patent status:

Inquiries about obtaining rights for the commercial use of this invention may be made to NASA, Code GP, Washington, D.C. 20546.

Source: L. C. Friend and K. D. Shaub
of the Bendix Corporation
under contract to
Marshall Space Flight Center
(MFS-12704)

NASA TECH BRIEF

NASA Tech Briefs are issued to summarize specific innovations derived from the U.S. space program, to encourage their commercial application. Copies are available to the public at 15 cents each from the Clearinghouse for Federal Scientific and Technical Information, Springfield, Virginia 22151.

High Power DC/DC and DC/AC Electrical Power Conversion Techniques Developed

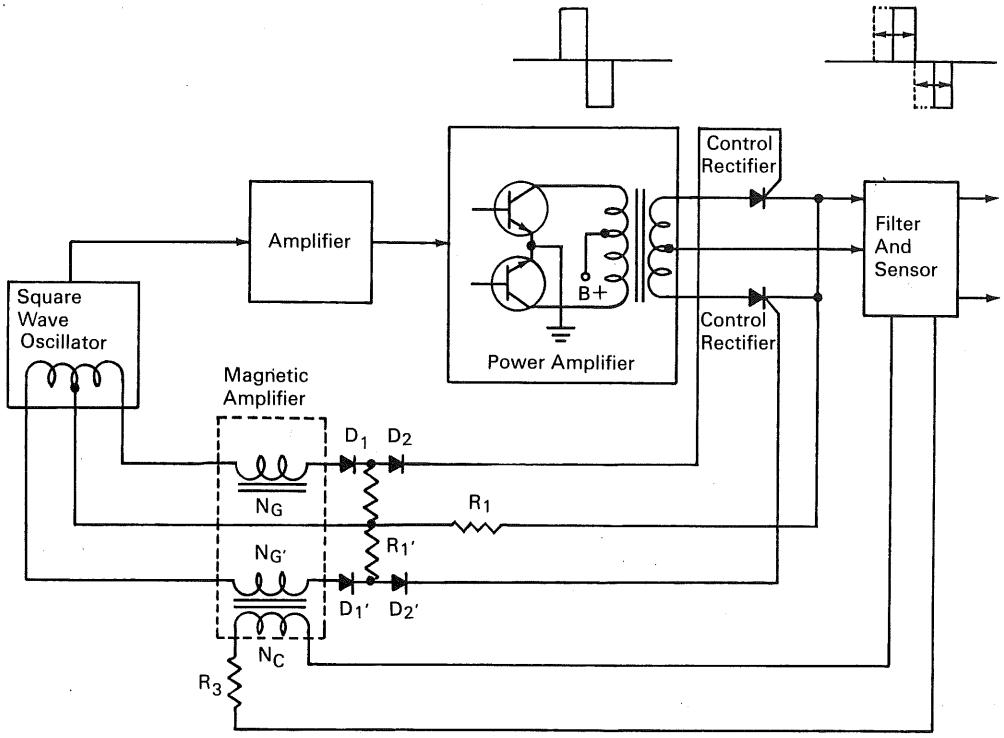

CONTROL RECTIFIER TECHNIQUE

Magnetic modulators or amplifiers have previously been used to drive power transistors directly. The magnetic modulator alternately controls the on-time of each transistor in such a manner that a pulse duration modulated square wave is used for regulation. This approach has been used successfully in many applications; however, where a large amount of power is required, the magnetic modulator's weight and volume could become excessive. If magnetic amplifiers are used at low levels and power amplification necessary to drive the power stages is obtained by the use of additional transistors, the interstage and output transformers must be overdesigned, if distortion of positive and negative pulses is to be eliminated.

The solution to this problem is to use very small magnetic amplifiers and pass square waves through all transformers. The simplest way to do this and provide regulation is to vary the pulse width on the

(continued overleaf)

This document was prepared under the sponsorship of the National Aeronautics and Space Administration. Neither the United States Government nor any person acting on behalf of the United States Government assumes any liability resulting from the use of the information contained in this document, or warrants that such use will be free from privately owned rights.

secondary of the output power transformers. Two techniques of accomplishing this follow.

Control Rectifier Technique. One very simple method of providing pulse duration modulation on the secondary of power transformers is by using a small, two-core magnetic amplifier or modulator to switch control rectifiers in the secondary legs of the output transformer. On each alternate half cycle of the supply frequency, the leading edge of the magnetic amplifier output switches the associated control rectifier on and it remains on for the remainder of the one-half cycle. Thus, by varying the leading edge of the pulses feeding into the control rectifiers, the output voltage is variable and, with proper feedback to the control winding of the magnetic amplifier, regulation can be accomplished.

When connected as shown, the ac output from the power stage is rectified by the control rectifiers, and a regulated dc is obtained when a filter and sensing circuit are placed in the circuit.

Diodes D_1 and D_1' are associated with the magnetic amplifier for self-saturation purposes. Diodes D_2 and D_2' prevent the magnetic amplifier magnetizing current from triggering the control rectifiers at the beginning of each half cycle. Normally, the magnetic amplifier would be designed for approximately a 5-volt, 25-ma output. This provides power for triggering the control rectifier for most applications. The circuit parameters are not critical and a maximum flux density value can be used for the design of all transformers. Since the magnetic amplifier provides isolation between the control winding, N_c, and the gate windings N_g and N_g', the output voltage can be at a high potential and a conventional bridge circuit can be utilized for sensing.

The Phase-Shift Technique. A phase-shift technique incorporating a magnetic amplifier or modulator is shown. The magnetic section is a conventional push–pull low level magnetic amplifier with a variable pulse width output. When power is applied, the leading edge of the signal from the magnetic amplifier switches on transistor Tr_1; transistor Tr_2 remains off since it does not have a positive signal on its base. The collector of transistor Tr_2 will be at a high positive potential, a portion of which will be applied to the base of transistor Tr_1 through the feedback circuit R_f and Z_2, holding it on until transistor Tr_2 is switched on during the next half cycle. During the next half cycle, transistor Tr_2 is switched on by the leading edge of the magnetic amplifier and the sequence repeats. From this push–pull network with positive feedback, a square wave is obtained and its phase, with reference to the signal driving the magnetic amplifier, is variable from 0° to approximately 170°. The amount of phase shift can be easily controlled by varying the firing point of the magnetic amplifier which in turn is controlled by the dc signal applied to the control winding N_c. Zener diodes Z_1 and Z_2 are inserted into the feedback line to allow positive feedback into the base of the "on" transistor for the one-half cycle required; and to insure that the "off" transistor is not turned on by the small positive potential on the collector of the "on" transistor because of its saturation resistance. This is accomplished by selecting Zener diodes that have a breakdown voltage greater than the collector to emitter voltage of an "on" transistor. D_1 and D_1' allow self-saturation of the magnetic cores whereas diodes D_2 and D_2' block the magnetizing current of the magnetic amplifier from the bases of the transistors.

Notes:

1. The phase shift technique described has been successfully utilized in a power supply to test an ion engine requiring various voltages and currents for operation. A total of 1500 watts was required at a 2500 volt potential, with a single 800 watt unit delivering most of the power. The ion engine (Hg ions) was tested in space.
2. Inquiries concerning this innovation may be directed to:

Technology Utilization Officer
Marshall Space Flight Center
Huntsville, Alabama 35812
Reference: B67-10390

Patent status:

No patent action is complated by NASA.

Source: G. Berryman and W. T. White
(MFS-13227)

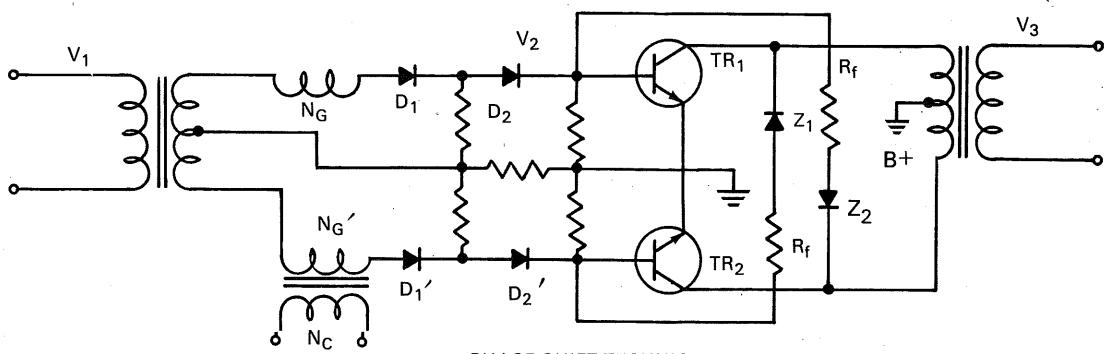

PHASE SHIFT TECHNIQUE

NASA TECH BRIEF

NASA Tech Briefs are issued to summarize specific innovations derived from the U.S. space program, to encourage their commercial application. Copies are available to the public at 15 cents each from the Clearinghouse for Federal Scientific and Technical Information, Springfield, Virginia 22151.

Multiplexer Uses Insulated Gate–Field Effect Transistors

The problem:

To design a highly accurate and reliable multiplexer of small size and weight for telemetry applications. The multiplexer must repetitively sample up to 234 separate data lines and time-share them on a single output line to allow single-line transmission.

The solution:

A multiplexer incorporating IG-FET's (insulated gate–field effect transistors) for all digital logic functions, including the internally generated 3.6-kHz clock. Transistors of this type are also used for analog data switching.

The multiplexer basically consists of 30 primary channels, each of which is sampled 120 times per second. Twenty-three data channels may be submultiplexed to 10 subchannels, sampled at 12 times per second. Four other data channels are sampled at only 120 times per second. The 3 remaining primary channels are used for amplitude reference and frame identification. The multiplexer accepts 0 to +5 volts and provides 2 parallel PAM (pulse amplitude modulated) wavetrain outputs, one with a 1.2-volt pedestal inserted during *on* time and one without pedestal. An internal calibration unit provides calibrated output levels equal to percentage values of 0, 25, 50, 75, and 100 within 0.2 percent of an externally applied voltage reference. The multiplexer uses 15 different printed-circuit boards, making a total of 35 boards, each 2 inches x 1 inch in size. Each board is completely encapsulated in epoxy resin. The individual encapsulated boards are stacked to form a compact, rugged unit occupying a volume of 29 cubic inches and weighing 1.3 pounds.

Notes:

1. The high accuracy and low output impedance of the multiplexer recommend it for driving either modulators or analog-to-digital converters. The system can also be used as a general purpose multiplexer in any application where time sharing or sampling is required.
2. Inquiries concerning design and performance details may be directed to:

   Technology Utilization Officer
   Marshall Space Flight Center
   Huntsville, Alabama 35812
   Reference: B67-10396

Patent status:

No patent action is contemplated by NASA.

Source: S. S. Gussow
of The Boeing Company
under contract to
Marshall Space Flight Center
(MFS-13096)

Category 01

This document was prepared under the sponsorship of the National Aeronautics and Space Administration. Neither the United States Government nor any person acting on behalf of the United States Government assumes any liability resulting from the use of the information contained in this document, or warrants that such use will be free from privately owned rights.

AEC-NASA TECH BRIEF

AEC-NASA Tech Briefs describe innovations resulting from the research and development program of the U.S. AEC or from AEC-NASA interagency efforts. They are issued to encourage commercial application. Tech Briefs are published by NASA and may be purchased, at 15 cents each, from the Clearinghouse for Federal Scientific and Technical Information, Springfield, Virginia 22151.

Potassium Plasma Cell Facilitates Thermionic Energy Conversion Process

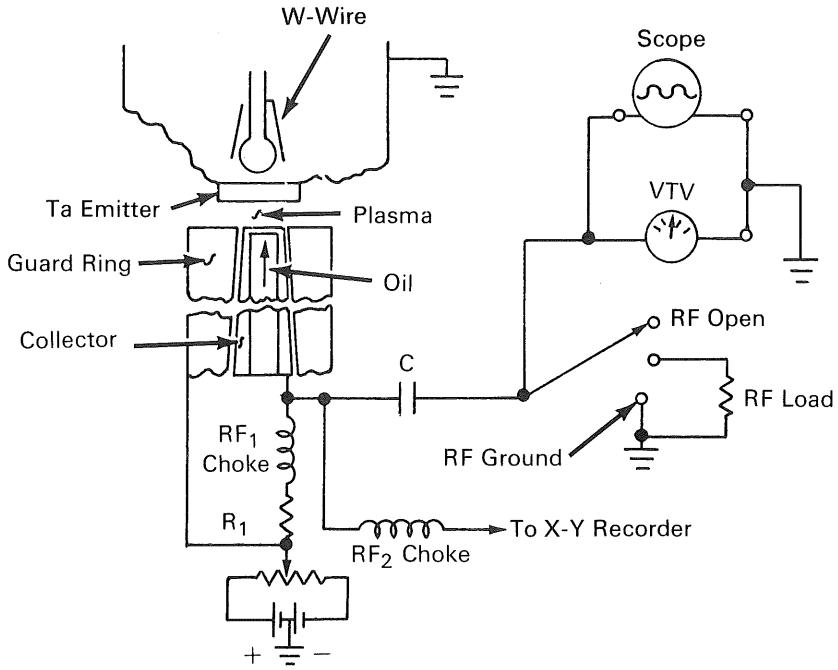

The problem:

To devise an economical and efficient method of converting nuclear energy into electrical power. The concept of thermionic energy conversion has shown promise as a direct means of employing nuclear energy, but it has not yet been reduced to practice. In present methods, reactor heat is converted to steam to drive steam turbine power generators which produce the electrical power. The generators and associated equipment are too bulky for some specialized uses.

The solution:

A thermionic energy converter, consisting of a potassium plasma cell, a tantalum emitter, and a silver plated copper collector, which converts nuclear generated heat directly into high frequency and direct current output. This conversion process eliminates the steam interface usually required between the atomic heat source and the electrical conversion system. The process also eliminates the bulky steam equipment.

How it's done:

In the thermionic conversion process, a heated source such as tantalum emits electrons. Some electrons are received at a collector and can be utilized as dc current; the electrons in transit create a negative space charge, which must be neutralized by positive

(continued overleaf)

This document was prepared under the sponsorship of the Atomic Energy Commission and/or the National Aeronautics and Space Administration. Neither the United States Government nor any person acting on behalf of the United States Government assumes any liability resulting from the use of the information contained in this document, or warrants that the use of any information, apparatus, method, or process disclosed in this document may not infringe privately owned rights.

ions such as those of potassium, before the space charge reaches a voltage potential which could cut off the electron flow. This neutralization often produces radio frequency oscillations, which must be removed or separated for effective utilization of the dc current.

The experimental arrangement shown was used to measure the radio frequencies, rms voltages, power output and other quantities under various conditions of emitter temperature, potassium vapor pressure, dc and rf loads.

The thermionic converter arrangement consisted of a 1/2-inch-diameter tantalum button as an electron emitter which was heated by an electron gun, and a 1/4-inch-diameter silver-oxide collector surrounded by a guard ring. The emitter-collector distance was 2.2 mm. The emitter was on ground potential and a voltage continuously varying from -3 to $+6$ volts was applied to the collector and guard ring. The potassium vapor pressure was regulated by the temperature control of a trap filled with liquid potassium.

An X-Y recorder traced the dc current-voltage characteristic. The rf component was separated from the dc by a $2\mu f$ capacitance and connected to an rms voltmeter and oscilloscope. Chokes between the collector and the applied dc voltage excluded the rf signals from the recorder.

The dc characteristics were taken for a constant emitter temperature and vapor pressure with the rf open and the rf short-circuited. For each characteristic, the radio frequency decreased with decreasing voltage applied to the collector, and decreased with increasing emitter-collector spacing. For any increase in emitter temperature and current, the radio frequencies decreased for identical collector dc voltages. Rf oscillations do not occur for potassium ion densities much greater than electron densities, as e.g., 10^{-2} mm Hg. These observations agreed with theoretical computations.

Notes:

1. Additional details are contained in *AMU–ANL Conference on Direct Energy Conversion,* November 4–5, 1963, Argonne National Laboratory (ANL) Report No. 6802, pp. 152–160. This report is available from the Clearinghouse for Federal Scientific and Technical Information, Springfield, Virginia 22151; price $3.00; microfiche $0.65.
2. Inquiries concerning this innovation may be directed to:

   Office of Industrial Cooperation
   Argonne National Laboratory
   9700 South Cass Avenue
   Argonne, Illinois 60439
   Reference: B67-10399

Source: H. K. Richards
Reactor Physics Division
(ARG-10010)

Patent status:

Inquiries about obtaining rights for commercial use of this innovation may be made to:

Mr. George H. Lee, Chief
Chicago Patent Group
U.S. Atomic Energy Commission
Chicago Operations Office
9800 South Cass Avenue
Argonne, Illinois 60439

NASA TECH BRIEF

NASA Tech Briefs are issued to summarize specific innovations derived from the U.S. space program, to encourage their commercial application. Copies are available to the public at 15 cents each from the Clearinghouse for Federal Scientific and Technical Information, Springfield, Virginia 22151.

Current Steering Commutator Offers Versatility

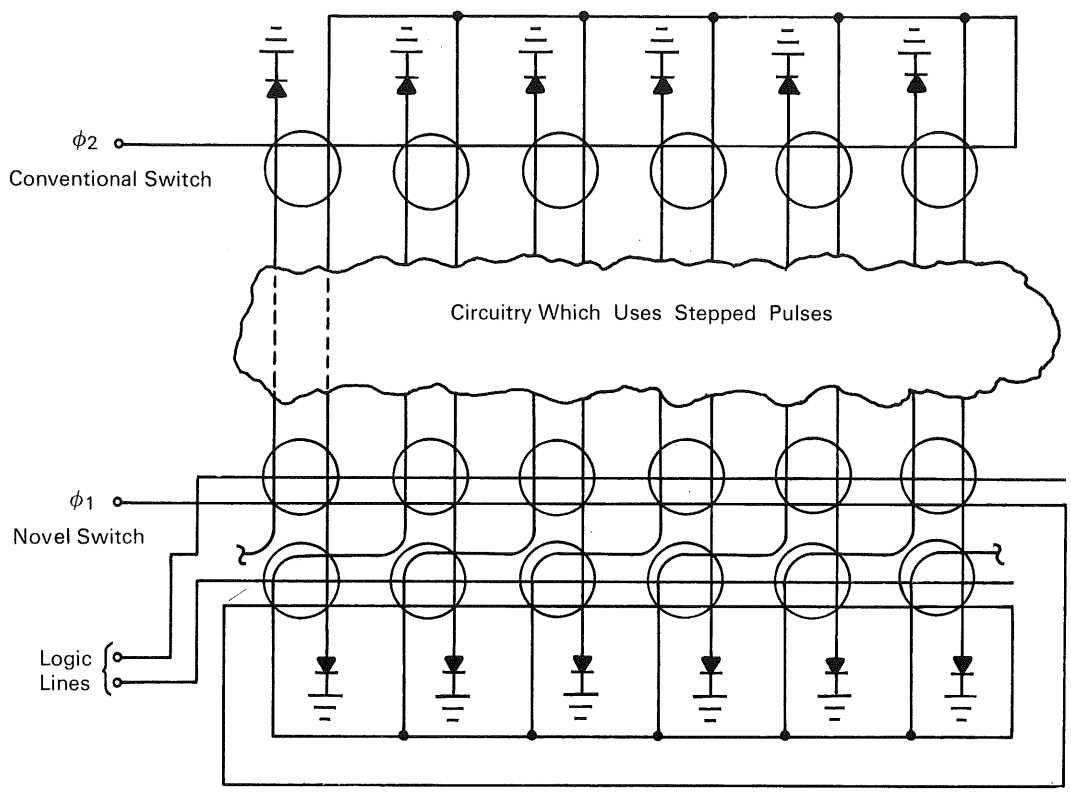

The problem:

Current steering switches have frequently been used in pairs as gated pulse sequence generators. These switches are limited in that they can be stepped only through a predetermined cyclic sequence. Utility of a commutator would be extended if the sequence could be altered on the basis of some decision made at any step within the sequence.

The solution:

A novel current steering commutator capable of stepping to all possible locations from any location by appropriate control logic, and which is easily tailored to specific user requirements.

How it's done:

The novel current steering commutator is made by coupling a conventional steering switch and a

(continued overleaf)

This document was prepared under the sponsorship of the National Aeronautics and Space Administration. Neither the United States Government nor any person acting on behalf of the United States Government assumes any liability resulting from the use of the information contained in this document, or warrants that such use will be free from privately owned rights.

novel switch. Whereas the conventional steering switch has one core at each output, the novel switch has many. Each of these cores represents a step span that results in a steered output at that path. The cores of the novel switch are arranged in a "matrix" and are laced with wires from the conventional switch and the control logic. The novel switch outputs are laced through the cores of the conventional switch in the normal manner.

A commutator is operated in the usual two phase cycle: Phase 1, the novel switch is pulsed and an output pulse appears. In the normal manner a core in the conventional switch is set and the output pulse is utilized. Phase 2, the conventional switch is pulsed and external lines are pulsed in accordance with the required step span and direction. One core in the novel switch is set and the output pulse is utilized. A six-stage commutator which illustrates the technique is shown schematically in the figure. It is capable of advancing forward by one step or repeating a step upon command.

Note:

Inquiries concerning this invention may be directed to:

Technology Utilization Officer
Jet Propulsion Laboratory
4800 Oak Grove Drive
Pasadena, California 91103
Reference: B67-10410

Patent status:

The invention is owned by NASA, and a patent application has been filed. Royalty-free, nonexclusive licenses for its commercial use will be granted by NASA. Inquiries concerning license rights should be made to NASA, Code GP, Washington, D.C. 20546.

Source: Lawrence J. Zottarelli
(JPL-812)

NASA TECH BRIEF

NASA Tech Briefs are issued to summarize specific innovations derived from the U.S. space program, to encourage their commercial application. Copies are available to the public at 15 cents each from the Clearinghouse for Federal Scientific and Technical Information, Springfield, Virginia 22151.

Dielectric Prisms Would Improve Performance of Quasi-Optical Microwave Components

The problem:

Use of conventional, single-mode, rectangular waveguide in the millimeter and submillimeter range is accompanied by large waveguide losses, which increase with frequency. One way of minimizing these losses is to use oversize waveguide for various functional elements such as attenuators, couplers, and phase shifters. In these cases the microwave signals behave in a quasi-optical manner, permitting the use of many standard optical components and techniques. In one technique, a double prism has been used as the basic element in conjunction with oversize waveguide. In this technique the input signal is split at the air gap between the two prisms, part of the signal being reflected as one output and part transmitted as a second output. The energy division depends on the gap distance and the wavelength. Reflection losses occur at the input and output surfaces, making it necessary to use impedance matching methods to reduce the VSWR. One way of accomplishing the reduction is to use a fine comb structure cut into the input and output faces of the prisms. This double-prism approach has a number of disadvantages, which include the following: (1) The comb structure is narrowband, and becomes increasingly difficult to fabricate as the frequency increases. Other impedance-matching methods are either narrowband, or lossy, or both. (2) The parallelism of the inner surfaces of the prisms must be accurately maintained as the gap is varied in order to have accurate and repeatable performance. This requirement presents a mechanical alignment problem. (3) The energy division is frequency dependent.

The solution:

The properties of the Brewster angle (the one angle of incidence of a polarized light wave in the plane of incidence at a dielectric interface for which the reflected signal is zero) and internal reflection in a dielectric prism are proposed as the basis of a new type of element for use in oversize waveguide. Precision broadband attenuators, phase shifters, and directional couplers can be constructed on the basis of these properties. In principle, the performance of these devices depends only on the geometrical configuration and the dielectric constant of the constituent material. Because this constant is nearly independent of wavelength over a waveguide bandwidth, the devices should be inherently broadband. With the input and output signals at the Brewster angle, reflection losses would be at a minimum, and no impedance matching networks should be required. The overall reflectance and admittance may be calculated directly by means of the Fresnel equations. Low-loss dielectric materials (plastics, ceramics, quartz) commonly used in microwave devices are suitable for the dielectric prisms. For an amplitude modulator, the dielectric prism would consist of a ferrite.

Note:

Inquiries concerning these devices may be directed to:

Technology Utilization Officer
Electronics Research Center
575 Technology Square
Cambridge, Massachusetts 02139
Reference: B67-10416

Patent status:

Inquiries about obtaining rights for the commercial use of this invention may be made to NASA, Code GP, Washington, D.C. 20546.

Source: John W. Carson
(ERC-10011)
Category 01

This document was prepared under the sponsorship of the National Aeronautics and Space Administration. Neither the United States Government nor any person acting on behalf of the United States Government assumes any liability resulting from the use of the information contained in this document, or warrants that such use will be free from privately owned rights.

NASA TECH BRIEF

NASA Tech Briefs are issued to summarize specific innovations derived from the U.S. space program, to encourage their commercial application. Copies are available to the public at 15 cents each from the Clearinghouse for Federal Scientific and Technical Information, Springfield, Virginia 22151.

Temperature-Sensed Cryogenic Bleed Maintains Liquid State in Transfer Line

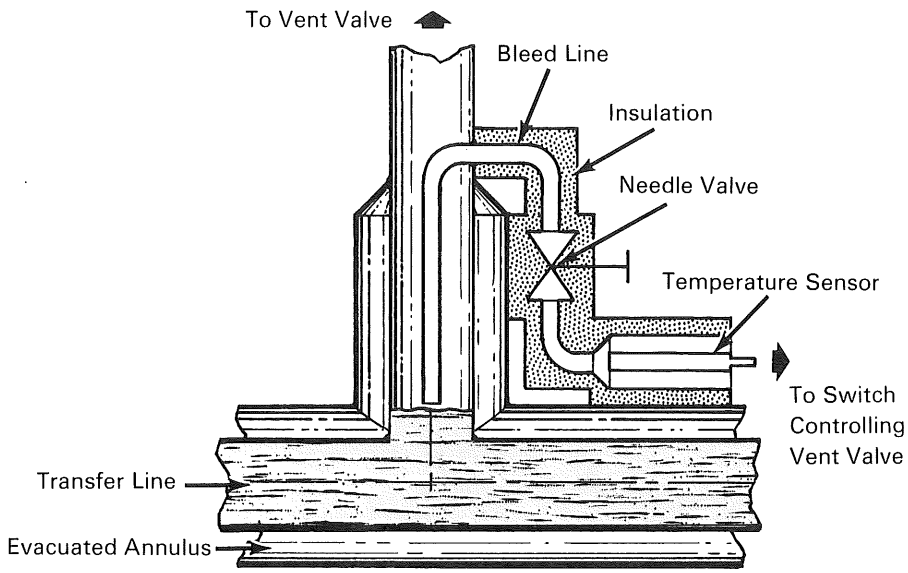

The problem:

To maintain nitrogen in the liquid state constantly in a cryogenic transfer line.

The solution:

An inverted tee installed at a high point in the transfer line is equipped with an insulated bleed line that constantly passes a fixed amount of the cryogenic fluid at atmospheric pressure, over a sensing device. The sensing device actuates a vent valve in the tee stack whenever gaseous nitrogen is present.

Notes:

1. This system has an advantage over that employing a sensor within the transfer line since the latter would react to differences in line pressure as well as to gaseous versus liquid phases. The temperature of LN_2 varies between $-320°F$ at atmospheric pressure and $-274°F$ at 140 psia.
2. Inquiries concerning this innovation may be directed to:

   Technology Utilization Officer
   Marshall Space Flight Center
   Huntsville, Alabama 35812
   Reference: B67-10424

Patent status:

No patent action is contemplated by NASA.

Source: A. R. Lindgren
of North American Aviation, Inc.
under contract to
Marshall Space Flight Center
(MFS-12681)

Category 01

This document was prepared under the sponsorship of the National Aeronautics and Space Administration. Neither the United States Government nor any person acting on behalf of the United States Government assumes any liability resulting from the use of the information contained in this document, or warrants that such use will be free from privately owned rights.

NASA TECH BRIEF

NASA Tech Briefs are issued to summarize specific innovations derived from the U.S. space program, to encourage their commercial application. Copies are available to the public at 15 cents each from the Clearinghouse for Federal Scientific and Technical Information, Springfield, Virginia 22151.

Aluminum Heat Sink Enables Power Transistors to Be Mounted Integrally with Printed Circuit Board

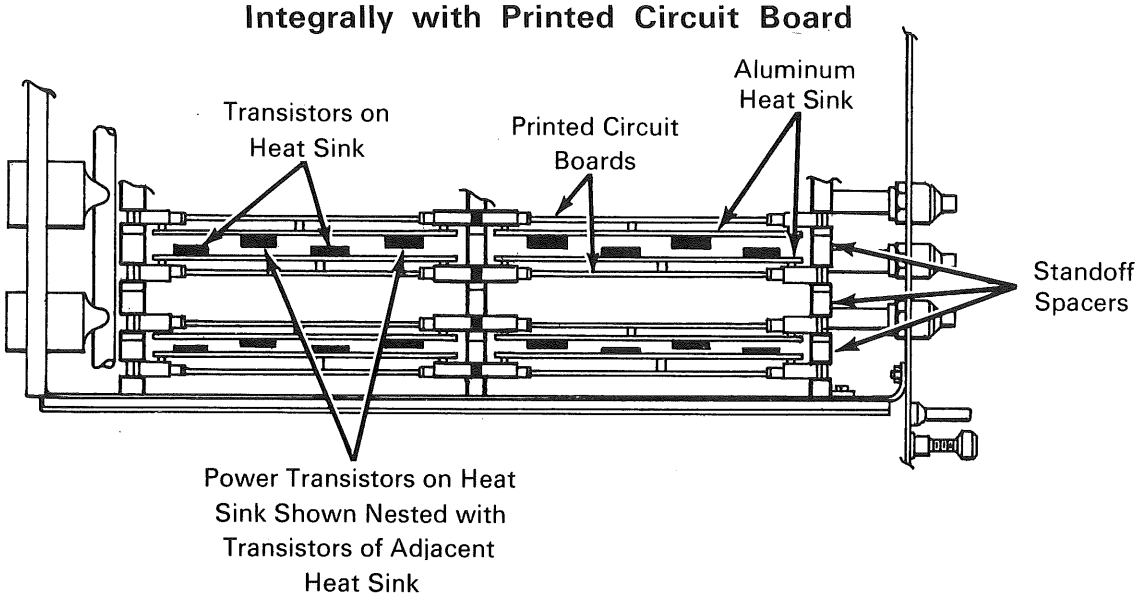

The problem:

To design a compact electronic module that contains an integral heat sink for power transistors. Previous designs separated the power transistors from the associated circuitry, requiring additional wiring, complicating functional testing and maintenance, and requiring substantially more space.

The solution:

A flat type aluminum heat sink for power transistors that mounts directly on the printed circuit board containing the associated circuitry.

How it's done:

The power transistors are mounted on the flat plate aluminum heat sink. Standoff spacers are used to attach the heat sink to the printed circuit board containing the remainder of the circuitry associated with the power transistors.

Notes:

1. When the power transistors are mounted asymmetrically on the heat sink, a gain in packaging density may be achieved where adjacent modules are reversed.
2. The assembled modules are mounted in a standard design of a slide rail mounted chassis assembly utilizing conventional printed circuit board techniques and connectors.
3. The attached heat sink increases the mechanical strength of the printed circuit board.
4. Inquiries concerning this innovation may be directed to:

   Technology Utilization Officer
   Marshall Space Flight Center
   Huntsville, Alabama 35812
   Reference: B67-10426

(continued overleaf)

This document was prepared under the sponsorship of the National Aeronautics and Space Administration. Neither the United States Government nor any person acting on behalf of the United States Government assumes any liability resulting from the use of the information contained in this document, or warrants that such use will be free from privately owned rights.

Patent status:

No patent action is contemplated by NASA.

Source: R. C. Seaward
of North American Aviation, Inc.
under contract to
Marshall Space Flight Center
(MFS-13663)

NASA TECH BRIEF

NASA Tech Briefs are issued to summarize specific innovations derived from the U.S. space program, to encourage their commercial application. Copies are available to the public at 15 cents each from the Clearinghouse for Federal Scientific and Technical Information, Springfield, Virginia 22151.

Automatic Telemetry Checkout System

Telemetry checkout has been conventionally performed by manually operated ground stations in the past. However, with the increasingly large number of measurements that must be made on space vehicles, it has become necessary to automate these tests.

A telemetry checkout station has been designed to automatically perform many measurements on the vehicle telemetry links. Its unique features include real-time digitizing and computer controlled station setup, data processing, and self-check.

Standard telemetry equipment is used to receive, demodulate, and process the various signals. Continuous and time-multiplexed signals from discriminators are automatically digitized and assembled into a predetermined time slot. Each word of the constructed wavetrain is scaled and calibrated using stored calibration values. The data is outputted to the launch vehicle checkout equipment for final evaluation.

The telemetry checkout station can handle a wide variety of automatic tests merely by changing its computer programs.

Note:

Inquiries concerning this innovation may be directed to:

Technology Utilization Officer
Marshall Space Flight Center
Huntsville, Alabama 35812
Reference: B67-10402

Patent status:

No patent action is contemplated by NASA.

Source: Wendell V. George
of The Boeing Co.
under contract to
Marshall Space Flight Center
(MFS-12580)

Category 01

This document was prepared under the sponsorship of the National Aeronautics and Space Administration. Neither the United States Government nor any person acting on behalf of the United States Government assumes any liability resulting from the use of the information contained in this document, or warrants that such use will be free from privately owned rights.

NASA TECH BRIEF

NASA Tech Briefs are issued to summarize specific innovations derived from the U.S. space program, to encourage their commercial application. Copies are available to the public at 15 cents each from the Clearinghouse for Federal Scientific and Technical Information, Springfield, Virginia 22151.

Control Apparatus for Spectral Energy Source

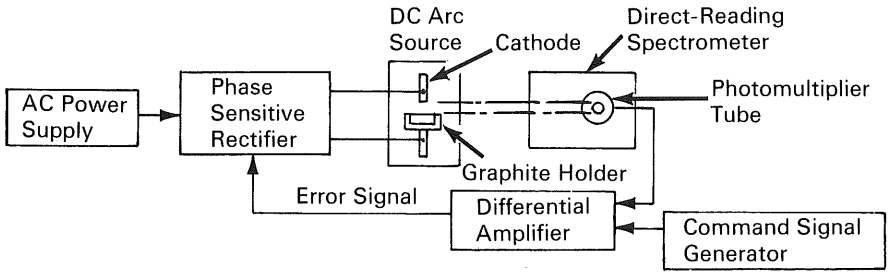

CONTROL SYSTEM

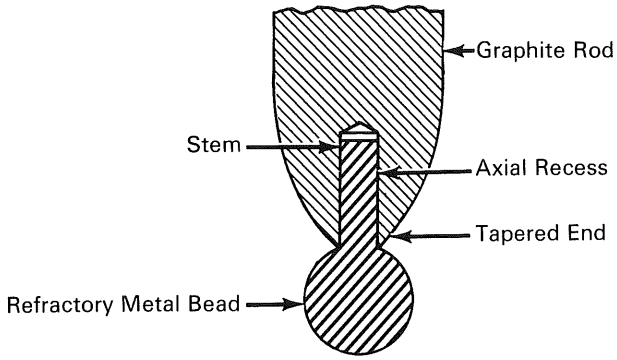

CATHODE ELECTRODE

The problem:

To devise a method for controlling the energy source of an emission spectrograph or spectrometer, particularly the dc arc source which excites the sample material. A dc arc source is extremely sensitive, but no satisfactory method has been found to precisely control its output energy. Uncontrolled arcs are subject to large relative errors which severely restrict the precision with which trace analyses can be made. Analytical spectroscopists use other sources to achieve high precision and thereby sacrifice sensitivity.

The solution:

An automatic, light-controlling system for dc arc emission spectrographs, which controls the vaporization rate of the sample, and also stabilizes the dc arc. The output energy is regulated such that advantage can be taken of the highly sensitive dc arc source, without sacrificing the desired precision.

(continued overleaf)

This document was prepared under the sponsorship of the National Aeronautics and Space Administration. Neither the United States Government nor any person acting on behalf of the United States Government assumes any liability resulting from the use of the information contained in this document, or warrants that such use will be free from privately owned rights.

The vaporization rate of the sample, and therefore, the output energy of the dc arc source, are controlled in accordance with a programmed signal—either a constant or a time-dependent command signal. The output energy of the dc arc source is compared with a programmed command signal and the difference between them produces an error signal. This signal regulates the dc current supply to the arc source, such that the output energy is in accordance with the programmed command signal.

The system also stabilizes the arc of the dc arc source by means of a cathode structure having a refractory metal tip. This produces a steady, rather than flickering, source of light.

How it's done:

The control system consists of a dc arc source associated with a direct reading spectrometer. The arc source includes a cathode and an anode having a graphite holder which contains the sample material. To produce an arc between the anode and cathode, these electrodes are connected to a phase sensitive rectifier, energized from an ac power supply.

A photomultiplier tube senses the light output of a selected spectral line of the arc source and supplies an electrical signal through a line to a differential amplifier. The signal is proportional to the light energy of the arc. The photomultiplier tube signal is compared by the differential amplifier with the output from a command signal generator. The difference produces an error signal which is fed to the phase sensitive rectifier to control the rectifier's output magnitude. The error signal increases or decreases the rectifier output to control the vaporization rate of the sample material.

The cathode electrode is a graphite rod having a tapered end. An axial recess, drilled into the tapered end of the rod, receives the stem of a refractory metal bead. This bead enables a stable arc discharge to be maintained.

Notes:

1. Although this apparatus was designed for analysis of trace constituents in a sample by emission spectroscopy, it also can be used for determining major constituents of a sample.
2. This apparatus can be used in mass spectrometry and atomic absorption spectroscopy and in any application in which a constant or time-dependent energy output is required.
3. Inquiries concerning this innovation may be directed to:

   Technology Utilization Officer
   Lewis Research Center
   21000 Brookpark Road
   Cleveland, Ohio 44135
   Reference: B67-10404

Patent status:

This invention is owned by NASA and a patent application has been filed. Royalty-free, nonexclusive licenses for its commercial use will be granted by NASA. Inquiries concerning license rights should be made to NASA, Code GP, Washington, D.C. 20546.

Source: William A. Gordon
(Lewis-391)

NASA TECH BRIEF

NASA Tech Briefs are issued to summarize specific innovations derived from the U.S. space program, to encourage their commercial application. Copies are available to the public at 15 cents each from the Clearinghouse for Federal Scientific and Technical Information, Springfield, Virginia 22151.

Torque Meter Aids Study of Hysteresis Motor Rings

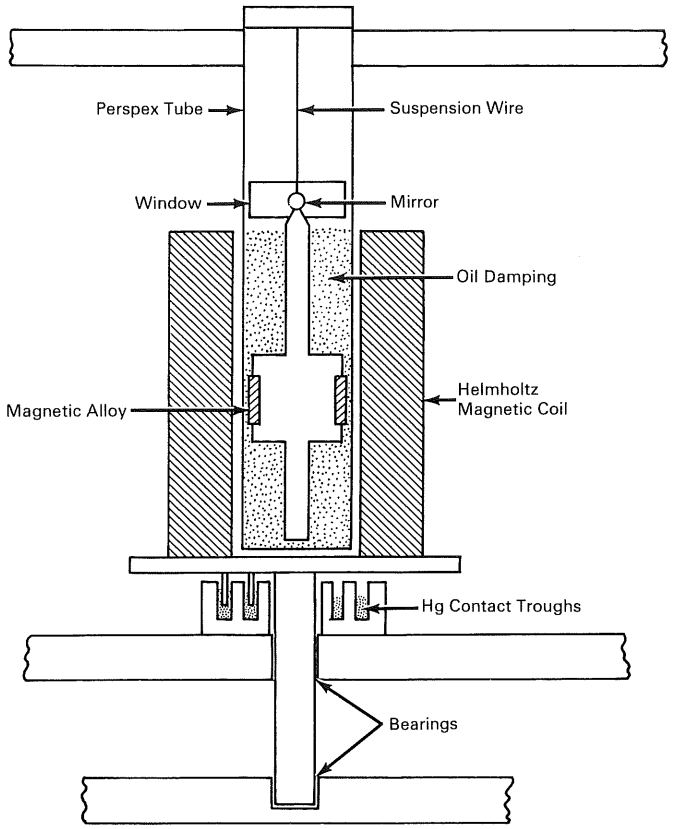

The problem:

To develop an accurate and economical method of determining the performance of hysteresis motor rotor rings under simulated dynamic conditions. The only present means of assessing rotor ring performance, aside from the very expensive method of actually making and testing a complete motor, is to determine the conventional hysteresis loops derived from an ac or dc applied field. However, the relationship between hysteresis loops and ring performance in a motor is unclear and accurate assessments are unobtainable by this method.

The solution:

A rotational hysteresis torque meter, which, by simulating motor operation in a simplified way, allows

(continued overleaf)

This document was prepared under the sponsorship of the National Aeronautics and Space Administration. Neither the United States Government nor any person acting on behalf of the United States Government assumes any liability resulting from the use of the information contained in this document, or warrants that such use will be free from privately owned rights.

rotor ring performance characteristics to be analyzed, without the need to build and test a high speed hysteresis motor. The torque meter determines hysteresis motor torque, the actual stresses of the ring due to its mechanical situation and rotation; aids in the study of asymmetries or defects in motor rings; and measures rotational hysteresis. In the slowly rotating magnetic field made possible with this instrument, the dependence of torque on the position of the field relative to the ring can be examined and the effect of discontinuities or directional properties can be measured.

How it's done:

The hysteresis torque meter is based on the principle that the torque exerted on the rotor ring of a hysteresis motor is very small at the synchronous speed, but rapidly increases to a near constant value on departure from synchronous speed. In operation, the motor may be spinning at up to 25,000 rpm, but the applied field may be rotating relative to the ring at only a few rpm out of synchronism. Therefore, the meter simulates motor operation by slowly rotating a magnetic field around a ring held stationary by an elastic suspension.

In the meter shown, a rotor ring is held in a brass clamp. The clamp, hung from a fixed post on a tungsten wire, has a mirror cemented on the top. The whole suspension is inside a Perspex tube, immersed in a damping oil. A pair of Helmholtz magnetic coils, 11.5 cm in diameter, is capable of generating a field of 76 oersteds. Contact to the coils is made through mercury troughs and the coil platform is rotated by a belt-drive from a 5 rpm motor. Antivibration mounts are used and the light beam is 200 cm long, giving a deflection of 200 mm for 124 dyne-cm of torque.

The rotor ring is held horizontally at the center of the Helmholtz coils rotating at 1 to 10 rpm. The torque exerted on the specimen is measured by the angular deflection of the mirror on the suspension wire. When the torque measurements at various speeds are extrapolated to zero speed, the synchronous torque of the motor can be measured and an assessment of the ring properties can be made.

Notes:

1. This information may be of interest to those concerned with the design, manufacture, and quality control testing of hysteresis synchronous motors.
2. Inquiries concerning this invention may be directed to:

   Technology Utilization Officer
   Marshall Space Flight Center
   Huntsville, Alabama 35812
   Reference: B67-10412

Patent status:

Inquiries about obtaining rights for the commercial use of this invention may be made to NASA, Code GP, Washington, D.C. 20546.

Source: M. Cole
of Metals Research Ltd.
under contract to
Marshall Space Flight Center
(MFS-12219)

NASA TECH BRIEF

NASA Tech Briefs are issued to summarize specific innovations derived from the U.S. space program, to encourage their commercial application. Copies are available to the public at 15 cents each from the Clearinghouse for Federal Scientific and Technical Information, Springfield, Virginia 22151.

Infrared Radiometer

A radiometer has been designed and constructed for use either with an f/16 telescope to measure thermal radiation from the surface of the dark moon or with a short-range optical system to measure thermal radiation from laboratory samples.

The basic scheme of the radiometer is the same whether it is mounted on a telescope or used with a laboratory optical system. Radiation from the collecting optics is focused on a plate that has a 0.5-mm-diameter aperture. Gold-coated mirrors are used to image the aperture on the thermal detectors, two gallium-doped germanium bolometers. The focal number of the radiometer optical system is f/16. To reduce background radiation, both the aperture plates and the optics can be cooled with liquid nitrogen to a temperature of approximately 100°K. To provide continuous calibration, the radiometer has two internal calibration sources. A gold-coated chopper changes the direction of view of each detector so that each responds first to the incoming radiation then to one of the internal calibration sources. A magnetic pickup is used to sense the phase of the chopper and to provide a signal for demodulating the output from each detector. The signals from the two detectors are added in phase to produce an increased signal-to-noise ratio. Theoretically, the two-detector system has a signal-to-noise ratio 1.4 times greater than that of a single detector system. The actual gain will depend on the similarity of the signal and noise characteristics of the individual detectors and on the precision of the alignment of the optical system. The two detectors used in the radiometer were well matched and had signal and noise characteristics that differed only by a few percent.

The spectral range of the radiometer is limited by the transmission of the window that is mounted on the detector dewar and by the band pass of the interference filter. The interference filters can be changed so that different band-pass filters can be used for making measurements in any spectral region up to the cutoff wavelength of the window.

Notes:

1. The radiometer has not yet been completely evaluated.
2. Inquiries concerning this instrument may be directed to:

   Technology Utilization Officer
   Marshall Space Flight Center
   Huntsville, Alabama 35812
   Reference: B67-10422

Patent status:

Inquiries about obtaining rights for the commercial use of this invention may be made to NASA, Code GP, Washington, D. C. 20546.

Source: A. N. Bird
of Southern Research Institute
under contract to
Marshall Space Flight Center
(MFS-13373)

Category 01

This document was prepared under the sponsorship of the National Aeronautics and Space Administration. Neither the United States Government nor any person acting on behalf of the United States Government assumes any liability resulting from the use of the information contained in this document, or warrants that such use will be free from privately owned rights.

NASA TECH BRIEF

NASA Tech Briefs are issued to summarize specific innovations derived from the U.S. space program, to encourage their commercial application. Copies are available to the public at 15 cents each from the Clearinghouse for Federal Scientific and Technical Information, Springfield, Virginia 22151.

Study Made of Anodized Aluminum Circuit Boards

The trend in electronic packaging is toward greater component density and, at the same time, increased power (watts per cubic inch). The heat generated (several hundred watts) on high power, low frequency circuits has to be dissipated quickly in order to maintain operating conditions for the mounted components.

Present circuit board materials (glass–epoxy, paper–epoxy) are poor thermal conductors. Many approaches have been attempted to obtain printed circuit board materials which exhibit good electrical properties and good thermal conductivities. The only material thus far available is beryllium oxide, a ceramic of excellent electrical and thermal properties. Brittleness, difficulty in manufacturing, toxicity, and cost are among the properties that have prevented its widespread use. Beryllium oxide is used in a limited quantity as a heat sink for transistors.

A study was initiated to find a commercially feasible material that has properties similar to existing printed circuit boards and is competitive in cost. It is believed that hard anodized aluminum can fulfill this need.

The results of this study have established the feasibility of producing hard coated aluminum core printed circuit boards. The development of a hard coating process, even without special sealing processing, produced 6061 aluminum boards with voltage breakdown strengths of 200 to 900 volts. Higher voltage strengths are obtainable by the development of special sealing and anodizing processes.

The development of techniques for the application of copper circuits to hard coated aluminum boards has demonstrated the feasibility of obtaining an electrical power circuit of high packaging density with very high thermal conductivity and mechanical strengths relative to presently used polymer materials.

While the boards produced to date have been fabricated under laboratory conditions, the techniques used to date could easily be scaled to production equipment and personnel.

The remaining problems, blistering, buildup on corners, buildup inside holes, burning, porosity, surface preparation, etc., can be solved within present technical state-of-the-art knowledge.

Notes:

1. Complete details of this study are contained in Saturn V Materials and Processes Report, SMPR 23-1, *Determine the Feasibility of Manufacturing Hard Coated Aluminum Circuit Boards,* by C. Jacobi and R. Sewell, The Boeing Company, December 16, 1965.
2. This report is available from:
   Technology Utilization Officer
   Marshall Space Flight Center
   Huntsville, Alabama 35812
   Reference: B67-10425

Patent status:

No patent action is contemplated by NASA.

Source: C. Jacobi and R. Sewell
of The Boeing Company
under contract to
Marshall Space Flight Center
(MFS-13580)

Category 01

This document was prepared under the sponsorship of the National Aeronautics and Space Administration. Neither the United States Government nor any person acting on behalf of the United States Government assumes any liability resulting from the use of the information contained in this document, or warrants that such use will be free from privately owned rights.

NASA TECH BRIEF

NASA Tech Briefs are issued to summarize specific innovations derived from the U.S. space program, to encourage their commercial application. Copies are available to the public at 15 cents each from the Clearinghouse for Federal Scientific and Technical Information, Springfield, Virginia 22151.

Conceptual Nonorthogonal Gyro Configuration for Guidance and Navigation

Future extended space missions and supersonic transport applications will require guidance and navigation systems of high reliability. To achieve this, some form of redundancy will have to be employed. An investigation has been made into the use of nonorthogonal sensor configurations to provide such redundant capabilities. An optimal configuration using six single-degree-of-freedom inertial reference gyroscopes has been defined and analyzed. The gyroscope input axes are arrayed in a unique symmetrical pattern that corresponds to the array of normals to the faces of a regular dodecahedron.

A complete data processing and self-contained failure detection-and-isolation mechanism has been defined for this symmetrical configuration. The data reduction technique permits satisfactory system performance even with three of the six gyros inoperative. When more than three gyros are operative, a statistical weighting procedure has been implemented to define a "best" estimate of vehicle rates. A minimum computational processing technique has also been defined.

The failure-isolation mechanism operates on the basis of gyro output comparisons, and provides the data processing scheme with reorganization capabilities. Isolation of any two failures and detection of the presence of a third is achieved for either instrument performance degradation or catastrophic failures.

This system has been formulated in a strap-down configuration to attain maximum redundancy, and analysis indicates an appreciable improvement in reliability over orthogonal redundant guidance system configurations, including those employing nine gyros. The concepts formulated in this study are also directly applicable to other inertial instruments.

Notes:

1. This development is in conceptual stage only, and as of date of publication of this Tech Brief, neither a model nor prototype has been constructed.
2. Inquiries concerning this invention may be directed to:

   Technology Utilization Officer
   Manned Spacecraft Center
   Houston, Texas 77058
   Reference: B67-10433

Patent status:

Inquiries about obtaining rights for the commercial use of this invention may be made to NASA, Code GP, Washington, D.C. 20546.

Source: Jerold P. Gilmore
of Massachusetts Institute of Technology
under contract to
Manned Spacecraft Center
(MSC-11363)

Category 01

This document was prepared under the sponsorship of the National Aeronautics and Space Administration. Neither the United States Government nor any person acting on behalf of the United States Government assumes any liability resulting from the use of the information contained in this document, or warrants that such use will be free from privately owned rights.

NASA TECH BRIEF

NASA Tech Briefs are issued to summarize specific innovations derived from the U.S. space program, to encourage their commercial application. Copies are available to the public at 15 cents each from the Clearinghouse for Federal Scientific and Technical Information, Springfield, Virginia 22151.

Algebraic Monte Carlo Procedure Reduces Statistical Analysis Time and Cost Factors

The problem:

In statistically analyzing performance parameters in large, complex systems, various approaches have been explored in an effort to control the error factor. Two of these, the Monte Carlo method, and the root-sum-square method have been freely employed but exhibit certain deficiencies. Given an accurate simulation program and unlimited computer time, an output histogram can be constructed by the Monte Carlo method to any required accuracy. Because accuracy of the Monte Carlo procedure is proportional to the reciprocal of the square root of the sample size, those cases where the simulation program is expensive to operate would find a Monte Carlo study prohibitively costly.

In root-sum-square studies, individual one sigma perturbations on the input variables are run through the simulation program one at a time. The resultant effects on the output variable are root-sum-squared to get its standard deviation. Although a fast method, the assumptions required for use of the root-sum-square method are rarely satisfied by the factual situation.

The solution:

An algebraic Monte Carlo procedure that requires fewer restrictive assumptions than the root-sum-square method and that is significantly cheaper to operate than true Monte Carlo. Basically, the algebraic Monte Carlo procedure makes a series of perturbations on the input variables at selected probability levels. The effect on the output variables is fit with a series of polynomial curve fits. With the curve fits established the simulation program is no longer used, but instead, Monte Carlo samples are derived from the polynomials. This procedure drastically reduces the number of expensive simulations and, therefore, the analysis time. Additionally, the individual effects of input variables can be isolated and individual input statistics can be changed without having to repeat the entire analysis.

Notes:

1. By using the expectation operator, the input variables can be ranked in order of decreasing effect, allowing engineering effort to be focused on that reduction of statistics that will yield the greatest effectiveness.
2. Inquiries concerning this innovation may be directed to:

   Technology Utilization Officer
   Marshall Space Flight Center
   Huntsville, Alabama 35812
   Reference: B67-10434

Patent status:

No patent action is contemplated by NASA.

Source: R. C. Africano and T. S. Logsdon
of North American Aviation, Inc.
under contract to
Marshall Space Flight Center
(MFS-1887)

Category 01

This document was prepared under the sponsorship of the National Aeronautics and Space Administration. Neither the United States Government nor any person acting on behalf of the United States Government assumes any liability resulting from the use of the information contained in this document, or warrants that such use will be free from privately owned rights.

NASA TECH BRIEF

NASA Tech Briefs are issued to summarize specific innovations derived from the U.S. space program, to encourage their commercial application. Copies are available to the public at 15 cents each from the Clearinghouse for Federal Scientific and Technical Information, Springfield, Virginia 22151.

Interference Effects Eliminated in Random Oriented Space Station

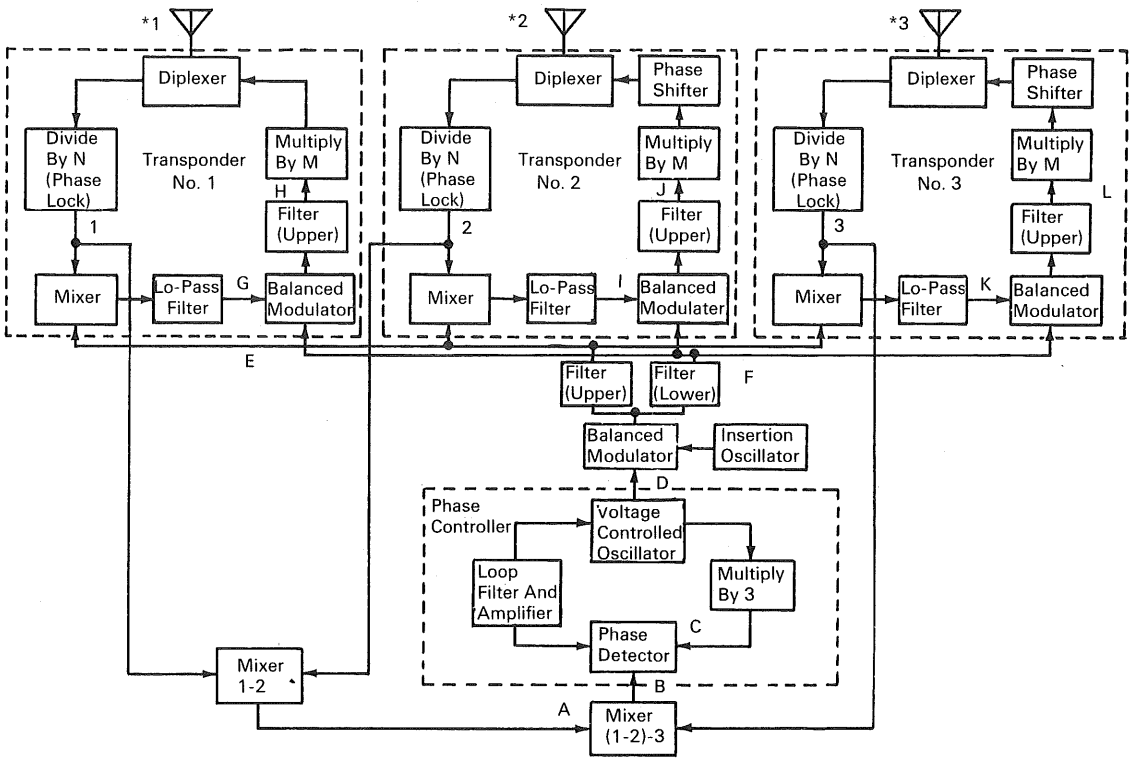

Antenna System

A system has been devised to eliminate destructive interference effects among multiple omnidirectional or semi-omnidirectional antennas on a large space vehicle that is either spin-stabilized or randomly oriented relative to the ground station with which communication is necessary.

The system includes three transponders located in near proximity to three antennas. The portion of the signal to be used for the transmitter frequency and phase determination is divided down by means of phase-locked frequency dividers to a frequency for which the phase controller unit is designed. This frequency would be on the order of 30 to 60 Mc. The response of the phase-locked frequency divider is such that it will respond to the frequency changes attributable to the relative velocity with respect to the ground station and the rotational velocity and orientation of the vehicle but not to pseudo-noise or modulation. The divided signals at points in the block diagram designated by 1, 2, and 3 are fed to the phase controller. Signals 1 and 2 are mixed together and their sum product, signal A, is then mixed with signal 3 and the sum product of this mixing action, signal B, is taken.

(continued overleaf)

This document was prepared under the sponsorship of the National Aeronautics and Space Administration. Neither the United States Government nor any person acting on behalf of the United States Government assumes any liability resulting from the use of the information contained in this document, or warrants that such use will be free from privately owned rights.

Signal B now contains the phase and doppler components of all three input signals. If the point of reference for the expressions of the input signals is taken at the point of symmetry for the antennas, the phase and doppler components will cancel at point B provided that no additional components are added by the system. Signal B is then fed to the phase detector of a phase-locked oscillator circuit and compared in phase to signal C, which is derived from the controlled oscillator. The output of the phase detector is filtered and amplified and used to control the oscillator. The oscillator frequency is one third of that of signal B. The loop is completed by means of a times-three frequency multiplier.

The oscillator output, D, goes to a balanced modulator, and is modulated by a frequency, ω_i, which is much higher than the doppler components or the down-link information content and yet much lower than the oscillator frequency. The balanced modulator output consists of the sum and difference frequencies with the original frequency suppressed. These two frequencies are separated by sideband filters to produce signals E and F. In actual practice phase-locked oscillators will regenerate signals E and F using the outputs of the filters as control. Down-link modulation is added at this point. Identical phase modulators (not shown) fed by signals E and F provide the modulation with minimal effects from signal treatment inequalities.

Signals E and F are fed back to the transponders at the ends of the modules. Signal E, which is the sum frequency product of the modulation of ω_i on the basic oscillator frequency, is applied to a mixer in each of the transponders and heterodyned with the divided-down input signals. The carrier and linear doppler frequency terms are eliminated in the difference frequency output of the mixer. Because signal E is higher in frequency than the input frequency, the rotational doppler and phase components in the mixer output signal, G, I, or K, are reversed in sense relative to ω_i, as compared to their sense relative to the input signals. The mixer output signals are filtered to eliminate the input frequencies and the sum product and fed to balanced modulators. The other input frequency to the balanced modulators in the transponders is signal F. Signal F is modulated by the mixer output signals and filtered so that only the upper sideband frequencies are present in the outputs. The result of this last process is to produce signals, H, J, or L, which contain divided-down signal components of the ground station transmitter signal frequency, linear doppler in its original sense, and rotational doppler and phase in reversed sense. These signals are then frequency multiplied to the desired output frequency and transmitted via the diplexer and the same antenna used for reception. When the effects of the rotational velocity and antenna positions are taken into account in translating these signals to a common wavefront plane normal to the direction of the ground station, the rotational doppler and spatial phase relationships will have been cancelled out and the signal powers will add.

Note:

Inquiries concerning this invention may be directed to:

Technology Utilization Officer
Manned Spacecraft Center
Houston, Texas 77058
Reference: B67-10435

Patent status:

Inquiries about obtaining rights for the commercial use of this invention may be made to NASA, Code GP, Washington, D.C. 20546.

Source: Royal R. Reilly
of Lockheed-California Company
under contract to
Manned Spacecraft Center
(MSC-11004)

NASA TECH BRIEF

NASA Tech Briefs are issued to summarize specific innovations derived from the U.S. space program, to encourage their commercial application. Copies are available to the public at 15 cents each from the Clearinghouse for Federal Scientific and Technical Information, Springfield, Virginia 22151.

Review of Research and Development in Fluid Logic Elements

A report has been prepared that reviews, historically and critically, the present state of research and development in multistate fluid elements. The report concludes that the development of fluid amplifiers is at the crossroads in that there are elements with very high gain and poor switching speed, and other elements with very high switching speed and poor gain. The former elements have been conventionally classed as active, while the latter have been classed as passive. In the light of recent advances, however, this distinction has become less meaningful. It is now anticipated that there will be a synthesis of active and passive principles so that speed may be combined with adequate gain.

The report considers four classes of multistate elements:

1. Multilevel with memory
2. Multilevel without memory
3. Multioutput with memory
4. Multioutput without memory

Tests have shown that the only satisfactory elements which could be built were in classes 3 and 4. The class 3 element found at least one useful application, the asynchronous shift register, but was relatively slow. The class 4 element has, however, been shown to be a powerful logic element with a capacity for high speed and an insensitivity to small geometric variations not found in any other class of element. Tests carried out on class 4 elements suggest that operation at very low Reynolds numbers should be possible although insufficient quantitative data have been obtained to show what the lower limit might be.

It appears from these conclusions that future investigations should involve class 4 elements used in conjunction with amplifiers of moderate gain. Tests should be conducted on complex circuits to determine system reliability and speed. A parallel effort should be made to determine the scope of recent concepts in bionics in which it appears that limitations of speed may be overcome by asynchronous polymorphic logic in much the same manner that the brain apparently overcomes these limitations. Majority logic and variable threshold logic elements may be synthesized from the basic fluid elements that have been developed. It is now conceivable that miniature fluid elements may be integrated to form thousands of interconnecting "neurons" to perform that quasi-digital type of logic now associated with the brain. If this should prove feasible, the state of the art would be one step closer to the adaptive machine having high-order artificial intelligence.

Note:

Additional details are contained in: *Research and Development in Fluid Logic Elements,* by T. Reader, Sperry Rand Corporation, NASA CR-61029, December 1964. Copies are available from:

Technology Utilization Officer
Marshall Space Flight Center
Huntsville, Alabama 35812
Reference: B67-10438

Patent status:

Inquiries about obtaining rights for the commercial use of this invention may be made to NASA, Code GP, Washington, D. C. 20546.

Source: T. Reader
of Sperry Rand Corporation
under contract to
Marshall Space Flight Center
(MFS-420)

Category 01

This document was prepared under the sponsorship of the National Aeronautics and Space Administration. Neither the United States Government nor any person acting on behalf of the United States Government assumes any liability resulting from the use of the information contained in this document, or warrants that such use will be free from privately owned rights.

NASA TECH BRIEF

NASA Tech Briefs are issued to summarize specific innovations derived from the U.S. space program, to encourage their commercial application. Copies are available to the public at 15 cents each from the Clearinghouse for Federal Scientific and Technical Information, Springfield, Virginia 22151.

Ellipsoidal-Mirror Reflectometer Accurately Measures Infrared Reflectance of Materials

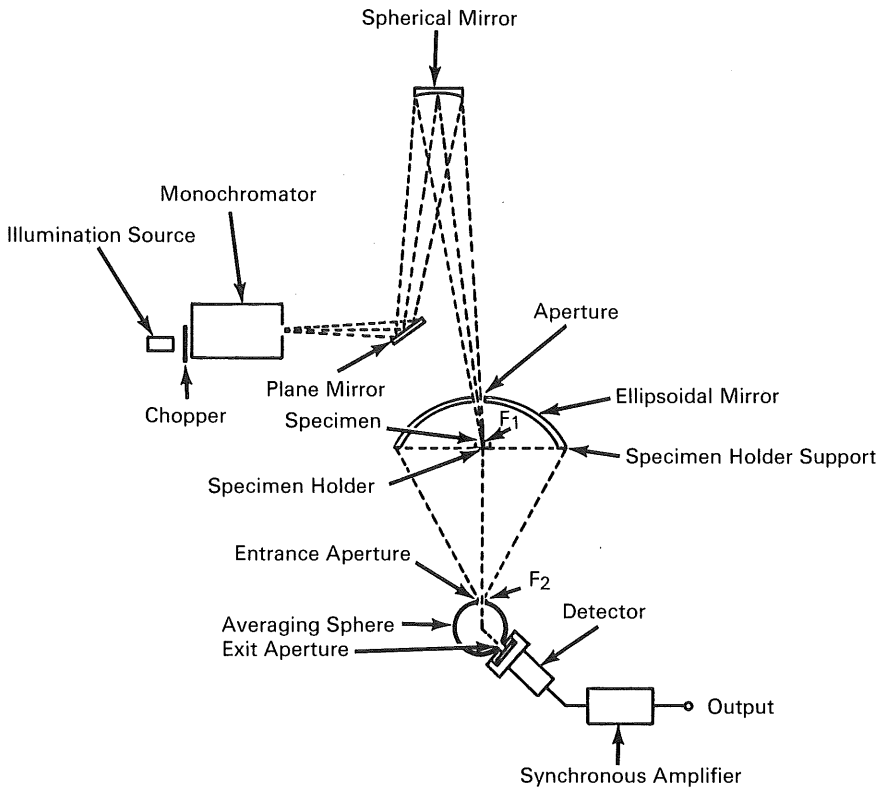

The problem:

To develop a reflectometer that will accurately measure the reflectance of specimens in the range of 20° to 1000°K at wavelengths in the infrared beyond 2.5 microns and under geometric conditions approximating normal irradiation and hemispherical viewing. Conventional instruments (including integrating sphere reflectometers, Coblentz hemisphere reflectometers, heated-cavity reflectometers, and paraboloidal-mirror reflectometers) generally do not afford the required high accuracy or versatility with regard to directional measurement of specular and diffuse reflectance.

The solution:

A reflectometer that includes an ellipsoidal mirror, which eliminates aberrations such as in spherical mirrors; a specially coated averaging sphere associated with a detector for minimizing spatial and angular sensitivity; and an incident flux chopper. The specimen and detector are separated by approximately

(continued overleaf)

This document was prepared under the sponsorship of the National Aeronautics and Space Administration. Neither the United States Government nor any person acting on behalf of the United States Government assumes any liability resulting from the use of the information contained in this document, or warrants that such use will be free from privately owned rights.

17 inches to provide ample space for cooling or heating the specimen without affecting the detector. By chopping the incident flux from an illumination source and using a synchronous amplifier to amplify the detector signal, the effect of flux emitted by a hot specimen is eliminated.

How it's done:

The flux from the illumination source is chopped (typically at a 11.3 cps rate) before entering a conventional monochromator. The monochromatic beam is then refocused by the plane and spherical mirrors through an aperture to the specimen supported at the focal point F_1 of the ellipsoidal mirror. The specimen holder is supported from crossed thin strands secured to the periphery of the ellipsoidal mirror. The reflected flux from the specimen is focused to the entrance aperture of an averaging sphere at the conjugate focus F_2 of the ellipsoidal mirror. The interior surface of the averaging sphere is coated with mu sulfur or an opaque film of vapor-deposited gold to increase the radiation-collection efficiency as well as to minimize the spatial and angular sensitivity of the system. This sphere includes an exit aperture which is at an angle of 135 degrees to the entrance aperture. The sensitive elements of the detector (thermopile or bolometer elements), positioned adjacent to the exit aperture of the averaging sphere, are connected to the synchronous amplifier.

Notes:

1. The detection efficiency of the system can be increased by the use of appropriate shields.
2. Inquiries concerning this invention may be directed to:

   Technology Utilization Officer
   Goddard Space Flight Center
   Greenbelt, Maryland 20771
   Reference: B67-10444

Patent status:

This invention is owned by NASA, and a patent application has been filed. Rotalty-free, nonexclusive licenses for its commercial use will be granted by NASA. Inquiries concerning license rights should be made to NASA, Code GP, Washington, D.C. 20546.

Source: S. T. Dunn and J. C. Richmond
of the National Bureau of Standards
under contract to
Goddard Space Flight Center
(GSFC-566)

NASA TECH BRIEF

NASA Tech Briefs are issued to summarize specific innovations derived from the U.S. space program, to encourage their commercial application. Copies are available to the public at 15 cents each from the Clearinghouse for Federal Scientific and Technical Information, Springfield, Virginia 22151.

Battery Charge Regulator Is Coulometer Controlled

The use of nickel/cadmium type primary cells in space applications is attractive in that these cells are capable of accepting a relatively high rate of charge without degradation. This is particularly important in the case of a satellite whose orbit involves a relatively short period in sunlight. To take advantage of the nickel/cadmium cell's tolerance for high charging rate, it is desirable to have a charge control method that permits maximum charge rate right up to full charge level.

Because the nickel/cadmium cell does not exhibit the end-of-charge voltage upswing except at very low temperatures, it is very difficult to control the charge by a voltage clamping method at normal operating ambients. Such techniques as voltage/current limiting, specific temperature control, and straight current limiting have been used in the past to control rate of charge but, generally speaking, either permit unnecessary overcharge or take excessive time.

A coulometer controlled battery charge regulator has been designed around a cadmium–cadmium type cell that overcomes the aforementioned disadvantages. This cell exhibits a characteristic whereby the voltage drop is approximately 50 millivolts until the coulometer's rated ampere hours have passed through the cell, at which time the voltage increases very rapidly. The same characteristic is also exhibited in the opposite direction. When a portion of the ampere hour value has been reversed and then recharged, a minor hysteresis loop is traversed. The coulometer voltage will rise when the same ampere hour value has been put back in as has been removed. The use of the coulometer as an ampere hour measuring device permits all available current to go to the battery until full charge state is reached, at which time the charge rate is automatically reduced.

Notes:

1. In view of the current interest in nickel/cadmium cells as energy sources for automotive vehicles, this method of charge control should be quite attractive for its time saving feature.
2. Inquiries concerning this innovation may be directed to:

   Technology Utilization Officer
   Goddard Space Flight Center
   Greenbelt, Maryland 20771
   Reference: B67-10446

Patent status:

No patent action is contemplated by NASA.

Source: John Paulkovich
(GSFC-561)

print & mail
what info avail

Category 01

This document was prepared under the sponsorship of the National Aeronautics and Space Administration. Neither the United States Government nor any person acting on behalf of the United States Government assumes any liability resulting from the use of the information contained in this document, or warrants that such use will be free from privately owned rights.

NASA TECH BRIEF

NASA Tech Briefs are issued to summarize specific innovations derived from the U.S. space program, to encourage their commercial application. Copies are available to the public at 15 cents each from the Clearinghouse for Federal Scientific and Technical Information, Springfield, Virginia 22151.

Oscillator Circuit Operates as Digitally Controlled Frequency Synthesizer

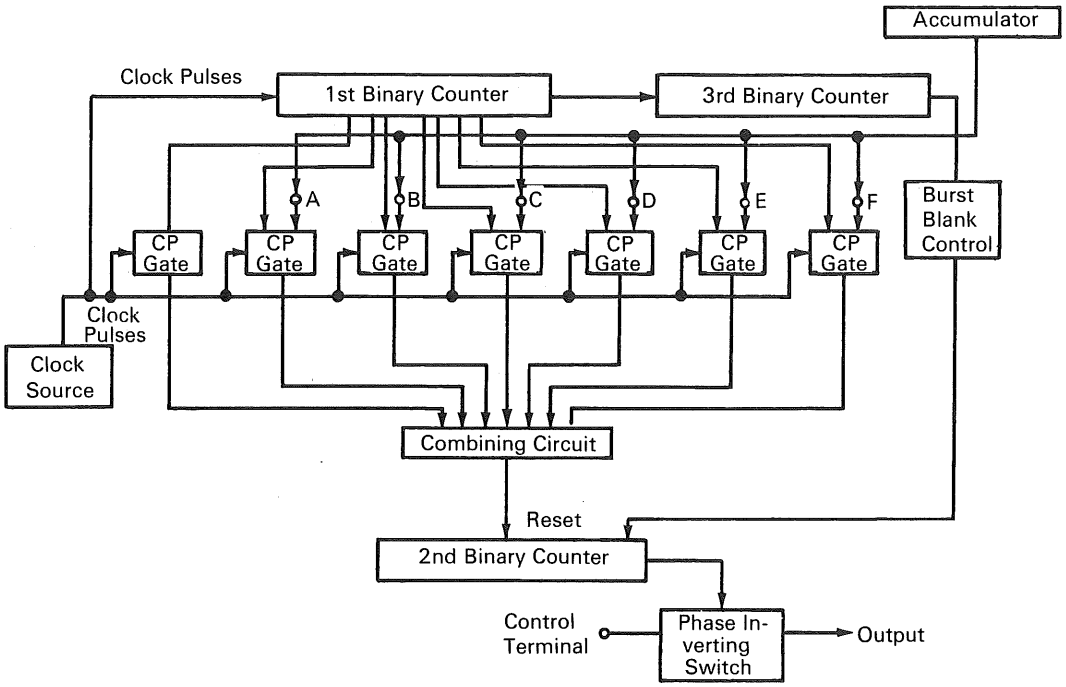

The problem:

Present types of digital oscillators for pulse frequency modulated telemetry systems use magnetic core oscillators to provide output frequencies that are only approximately known. Output frequencies of such oscillators are prone to drift, either separately or together, making exact frequency detection difficult under conditions of poor signal-to-noise ratio.

The solution:

A device that provides a better means of converting digital data from the format of binary information at several input terminals to the format of discrete frequencies at the output terminals. Each possible state of the input levels corresponds to one and only one frequency that can appear at the output.

How it's done:

The circuitry includes a common clock source which drives a first binary counter and several logic gates. This counter produces a number of pulse trains (one pulse train for each stage) having repetition rates related by the power of 2 in such a way that no pulses in any of the pulse trains occur simultaneously. The pulse trains are selectively gated through the logic gates to a combining circuit, with selection being made by a binary number applied to terminals A through F.

The resulting combined pulse train drives a second binary counter. The first stage of the second counter

(continued overleaf)

This document was prepared under the sponsorship of the National Aeronautics and Space Administration. Neither the United States Government nor any person acting on behalf of the United States Government assumes any liability resulting from the use of the information contained in this document, or warrants that such use will be free from privately owned rights.

generates a square wave, irregular in width, and the subsequent stages of the counter produce similar (irregular) square waves that have been divided down in frequency. As a result, the average period of the irregular square wave is increased while the absolute deviation in pulse width remains the same. Accordingly, the relative period deviation error between half-cycles of the square wave is reduced to a negligible amount.

A third binary counter drives a burst-blank control circuit for periodically resetting the second counter. This provides output signals of a constant number of cycles, independent of frequency drift in the clock, that begin at a predetermined time and at a predetermined phase. In addition, the output square wave from the second counter is fed through a phase inverting switch in response to a signal applied to the control terminal to provide output signals that form a bi-orthogonal set. This is advantageous when the received signal is to be detected by correlation techniques.

Notes:

1. The invention has the advantages of providing a large number of discrete frequencies, all derived from a single stable oscillator. A larger number of accurately controlled frequencies are obtainable than possible with prior art digital oscillators, thus increasing the coding gain of the system. Burst-blank control is provided from the same clock source so that for each telemetry burst the number of cycles remains constant. The output signals have one of two known, distinct phases, enhancing recovery in noisy communication channels by correlation techniques.
2. Inquiries concerning this invention may be directed to:

   Technology Utilization Officer
   Goddard Space Flight Center
   Greenbelt, Maryland 20771
   Reference: B67-10447

Patent status:

This invention is owned by NASA, and a patent application has been filed. Royalty-free, nonexclusive licenses for its commercial use will be granted by NASA. Inquiries concerning license rights should be made to NASA, Code GP, Washington, D.C. 20546.

Source: Rodger A. Cliff
(GSFC-570)

NASA TECH BRIEF

NASA Tech Briefs are issued to summarize specific innovations derived from the U.S. space program, to encourage their commercial application. Copies are available to the public at 15 cents each from the Clearinghouse for Federal Scientific and Technical Information, Springfield, Virginia 22151.

Foil Radiometer Accessory Improves Measurements

The problem:

To increase the responsiveness and to simultaneously decrease the time constant of a foil radiometer used to measure radiation from a high-energy environment. These two characteristic changes cannot usually be made simultaneously. For example, a decreased time constant could be accomplished by reducing the foil area, but this would decrease the responsiveness of the instrument.

The solution:

Isolate the foil in a controlled environment, and by means of an optical system, couple it to the media to be measured. The optical system focuses the radiant flux on a very small area at the center of a tantalum foil—the area which carries the thermocouple junction. This concentration of energy at the junction permits the junction temperature to respond more quickly than if the energy is distributed over the entire area of the foil.

How it's done:

The radiometer, comprised of an optical system and thin foil thermocouple detector, is enclosed in a sealed metal housing covered with thermal insulation. The housing is purged at a low flowrate with nitrogen gas which is exhausted around a sapphire window that serves as the entry aperture for the radiant flux.

In operation, the optical system establishes the field of view and focuses the radiant flux at the center of the foil. This results in a higher differential temperature between the center of the foil and foil support surface around its face, and upgrades the sensitivity of the instrument. Because the incoming radiant energy is concentrated at one small area, the area heats more rapidly and results in a decreased time constant for the instrument.

The controlled field of view of the optical system permits a high degree of selection in the portion of the source that is being observed, and provides critical measurement capability. Optical systems of prototype models provide a field of view of 6.16°.

Notes:

1. In test, output signal stability was within 0.3 percent over a 10-minute interval when exposed to a blackbody source radiating at a level of 250 watts/cm^2. When subjected to step changes of 50 watts/cm^2 in the radiation level, the signal consistently reached 63.2 percent of its final value in less than 200 milliseconds. Control of the spectral range being measured was accomplished by conventional filtering.
2. A further in-depth study has been made to determine how to increase the signal output (in millivolts) of a thermal foil radiometer for a fixed-exposure time interval within severe dimensional restraints. Consideration has been given to configuration geometry, thermal characteristics, and thermoelectric properties of available materials, Results indicate that an increase of >60 percent signal output is potentially available.

   The radiometer is fabricated from 0.0002-inch constantan foil, a relatively massive copper support that functions as a heat sink, and 0.001-inch copper wire. The instrument delivers a signal that is nearly linear with irradiance. The preferred foil geometry is a strip having a center-to-end width ratio of 4 to 1. This represents a 30 percent improvement over a rectangular strip, which has been found to be 62 percent better than a circular foil with full peripheral support as used in conventional radiometers.

(continued overleaf)

This document was prepared under the sponsorship of the National Aeronautics and Space Administration. Neither the United States Government nor any person acting on behalf of the United States Government assumes any liability resulting from the use of the information contained in this document, or warrants that such use will be free from privately owned rights.

3. Inquiries concerning this innovation may be directed to:

Technology Utilization Officer
Marshall Space Flight Center
Huntsville, Alabama 35812
Reference: B67-10448

Patent status:

No patent action is contemplated by NASA.

Source: P. E. Schumacher
of North American Aviation, Inc.
under contract to
Marshall Space Flight Center
(MFS-12684 & 12717)

NASA TECH BRIEF

NASA Tech Briefs are issued to summarize specific innovations derived from the U.S. space program, to encourage their commercial application. Copies are available to the public at 15 cents each from the Clearinghouse for Federal Scientific and Technical Information, Springfield, Virginia 22151.

Digital Voltage-Controlled Oscillator

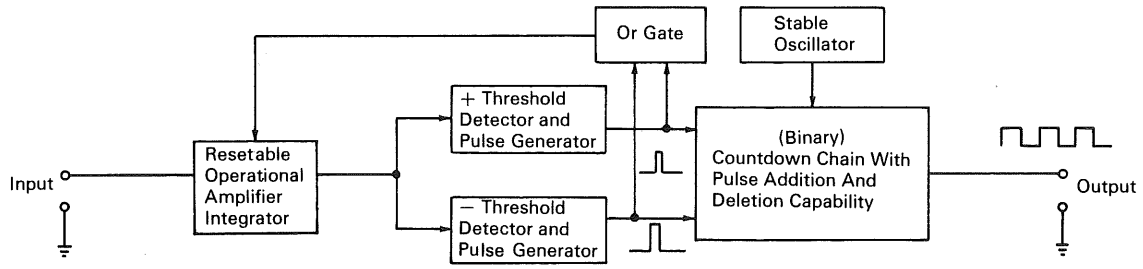

The problem:

To generate a variable frequency signal that is voltage controlled about a discrete center frequency in close linearity. Prior art VCO's (voltage-controlled oscillators) required expensive and critical temperature compensation coupled with closely regulated power supplies.

The solution:

A digital voltage-controlled oscillator that generates a variable frequency signal controlled linearly about a center frequency with high stability and that is phase controlled by an applied voltage.

How it's done:

The control voltage drives a resetable integrator. When the integral of the control voltage exceeds a positive threshold voltage, a pulse is generated that resets the integrator and simultaneously adds (or deletes) a specified number of pulses in a binary countdown chain. When the integrator becomes more negative than a negative threshold voltage, a pulse is generated that also resets the integrator but now deletes (or adds) pulses in the binary countdown chain. Thus, the output signal steps in phase at a rate proportional to the applied control voltage. A zero control voltage generates no pulses and the output signal frequency is an exact submultiple of the stable oscillator in this situation.

Notes:

1. The center frequency of this digital VCO is related to the accuracy of the stable oscillator but has the capability of large linear frequency excursions.
2. Integration ahead of the digital circuitry provides linear operation with control voltage having appreciable noise components.
3. Inquiries concerning this innovation may be made to:

   Technology Utilization Officer
   Goddard Space Flight Center
   Greenbelt, Maryland 20771
   Reference: B67-10449

Patent status:

No patent action is contemplated by NASA.

Source: T. V. Saliga, D. H. Schaefer, and J. P. Strong, III (GSFC-512)

Category 01

This document was prepared under the sponsorship of the National Aeronautics and Space Administration. Neither the United States Government nor any person acting on behalf of the United States Government assumes any liability resulting from the use of the information contained in this document, or warrants that such use will be free from privately owned rights.

NASA TECH BRIEF

NASA Tech Briefs are issued to summarize specific innovations derived from the U.S. space program, to encourage their commercial application. Copies are available to the public at 15 cents each from the Clearinghouse for Federal Scientific and Technical Information, Springfield, Virginia 22151.

Design for High-Temperature (1800°F) Liquid Metal Pressure Transducer

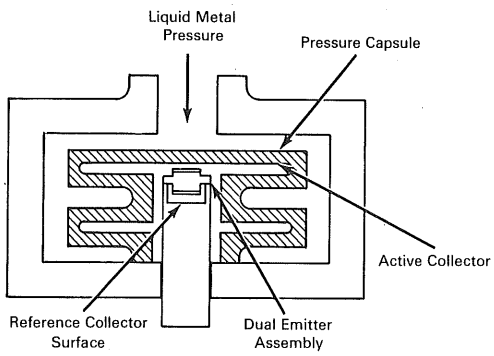

HIGH-TEMPERATURE TRANSDUCER

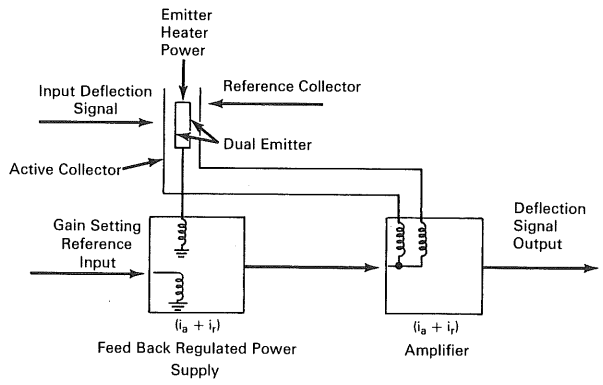

THERMIONIC DIODE DEFLECTION MEASUREMENT SYSTEM

The problem:

To design pressure transducers (one absolute and one differential) to be used in advanced space power systems using liquid metals (e.g., sodium, potassium, lithium) as working and heat transfer media at temperatures up to 1800°F. The transducer should be as small and lightweight as possible and capable of enduring long periods of unattended operation.

The solution:

A thermionic diode sensor which converts the motion of a pressure actuated refractory alloy capsule into a suitable electrical output.

How it's done:

The use of a high vacuum thermionic diode as a pressure sensing element is based on diode operation in the space charge limited mode, where the current flowing between the emitter and collector is distance dependent. If one of the electrodes (such as the collector) is moved as a function of pressure, the current is also a function of pressure. Now, if all other terms influencing the diode current can be controlled, an accurate high-temperature transducer can be constructed.

The current-spacing relation is nonlinear with the current varying as the inverse square of the space. To achieve linearity, a system is used which measures the difference between the currents i_a and i_r flowing through a pressure actuated collector (the refractory alloy pressure capsule) and a fixed reference collector. The power supply for the system is programmed such that the voltage applied to the collectors maintains the sum of the two currents at a constant level determined by the voltage and distance corresponding to zero pressure.

Under zero pressure conditions, the emitter-active collector distance and the emitter-reference collector distance are equal, resulting in $i_a = i_r$ and $(i_a - i_r) = p$. Depending upon the choice of the dc voltage, the current sum $(i_a + i_r)$ will have a definite value. Under pressure, the active collector will approach the emitter, causing i_a to rise while i_r remains constant. The dc voltage is then lowered to bring the sum $(i_a + i_r)$ back

(continued overleaf)

This document was prepared under the sponsorship of the National Aeronautics and Space Administration. Neither the United States Government nor any person acting on behalf of the United States Government assumes any liability resulting from the use of the information contained in this document, or warrants that such use will be free from privately owned rights.

to its original value and the difference ($i_a - i_r$) is taken as indicative of the pressure (active collector travel).

Notes:

1. The original equipment was designed in accordance with the following requirements.
   a. The absolute pressure transducer should have a range from 0 to 80 psia. The differential pressure transducer should have a range from −5 to +5 psid.
   b. The transducers should operate at ambient and fluid temperatures up to 1800° F.
   c. The transducers should have an accuracy of at least 5% of full scale. The accuracy should include the effects of linearity, hysteresis, sensitivity, change with temperature, zero shift (other than that caused by temperature), dynamic response characteristics up to 100 cps, and repeatability. The zero shift with temperature should not exceed 0.001% of full scale per degree.
   d. The transducers should have an operating life of 2000 hours at maximum fluid temperature with pressure cycling or 40,000 pressure cycles, whichever could be reached first.
   e. The transducers should have a frequency response of at least 100 cps to fluid pressures.
2. Tests conducted on these transducers have not progressed to the point at which definite operating characteristics may be established but indications are that the transducers are capable of successful operation for periods of thousands of hours.
3. This device is not limited to pressure applications but could also be used for the measurement of force, vibration, temperature, flow, and speed.
4. Inquiries concerning this invention may be directed to:

   Technology Utilization Officer
   Lewis Research Center
   21000 Brookpark Road
   Cleveland, Ohio 44135
   Reference: B67-10458

Patent status:

Inquiries about obtaining rights for the commercial use of this invention may be made to NASA, Code GP, Washington, D.C. 20546.

Source: R. E. Engdahl
of Consolidated Controls Corporation
under contract to
Lewis Research Center
(LEW-10144)

NASA TECH BRIEF

NASA Tech Briefs are issued to summarize specific innovations derived from the U.S. space program, to encourage their commercial application. Copies are available to the public at 15 cents each from the Clearinghouse for Federal Scientific and Technical Information, Springfield, Virginia 22151.

Stable AC Phase and Amplitude Comparator

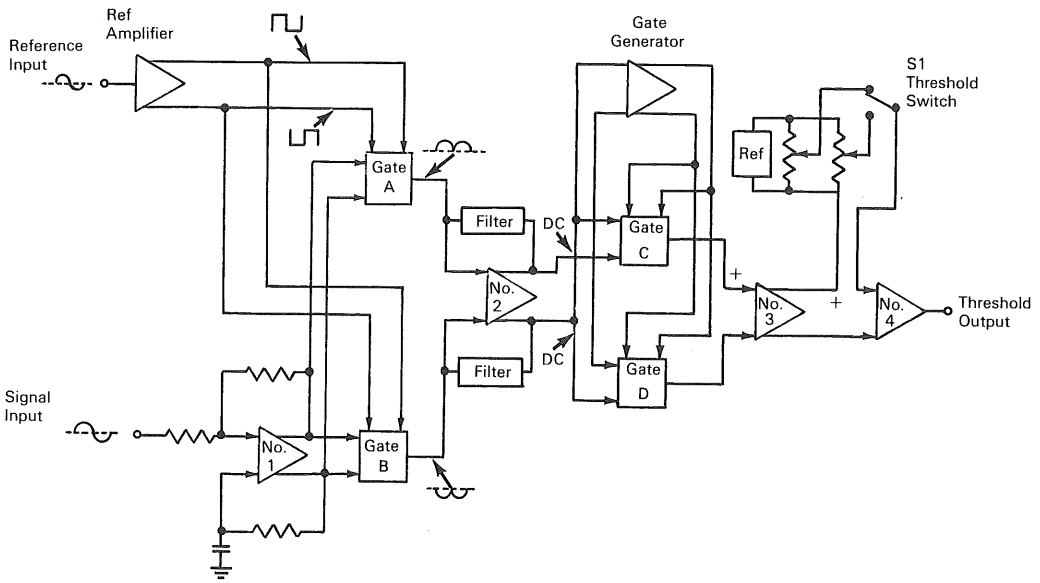

The problem:

To design a comparator circuit that will detect excessive vehicle maneuvering or vibration. Since the allowable vehicle vibration or maneuvering changes in accordance with the particular phase of the mission, multiple preselected thresholds are required. The monitoring elements are the rate gyros. They generate an ac output amplitude proportional to the rate of change of position. The phase of the output (0 or 180 degrees) is determined by the direction of the change of position. Therefore, vibration of the vehicle will generate a phase-modulated gyro output, and the frequency of the modulation will be the frequency of vibration. Control signal processing of rate integrating gyros for missile and satellite applications require very low drifts over an extreme temperature range.

The solution:

A stable ac phase and amplitude comparator with phase demodulation, low-pass filter, and multiple threshold-setting capability designed specifically for low drifts over a wide range of temperatures (−55° to +125°C). Differential operation of the comparator, from input through threshold detection, prevents drifts with respect to ground from affecting the threshold adjustments.

How it's done:

The comparator is designed to provide an output if the ac input exceeds a predetermined amplitude within a specified frequency range of phase modulation. The differential output of amplifier No. 1 provides two ac inputs to transmission gates A and B. The reference amplifier outputs are used as gate-enable signals for gates A and B. Operation of the

(continued overleaf)

This document was prepared under the sponsorship of the National Aeronautics and Space Administration. Neither the United States Government nor any person acting on behalf of the United States Government assumes any liability resulting from the use of the information contained in this document, or warrants that such use will be free from privately owned rights.

gates on the outputs of amplifier No. 1 provides two phase-sensitive, full-wave inputs, 180 degrees out of phase, to amplifier No. 2. This amplifier filters the phase-demodulated signals, providing a differential output. The amplitude and polarity of this output will be determined by the amplitude and phase of the input as long as the phase-modulation frequency is within the bandpass of the amplifier filters. As the modulation frequency increases, the amplifier output will decrease according to the frequency attenuation characteristics of the filters. The gate generator is a saturable switch that enables the differential outputs of transmission gates C and D to be always the same polarity regardless of the polarity of the inputs from amplifier No. 2. Amplifier No. 3 is a buffer amplifier used to provide adequate isolation so that a reference voltage can be floated on one side of the differential output. The inputs to amplifier No. 4 have an offset voltage determined by the potentiometer setting from zero to the maximum voltage of the reference source. As the comparator input amplitude increases, the offset voltage decreases, until the offset voltage is exceeded, changing the output polarity of amplifier No. 4.

The threshold levels may be changed by switching S1 or by adding other amplifiers and potentiometers, connected like amplifier No. 4, for each reference voltage setting desired. A relay driver at the output of amplifier No. 4 may be used to provide isolation of the load from the comparator.

Notes:

1. Suggested applications for this comparator are advanced control-signal processor, a rate switch control-signal processor, and a rate switch.
2. Inquiries concerning this development may be directed to:

   Technology Utilization Officer
   Marshall Space Flight Center
   Huntsville, Alabama 35812
   Reference: B67-10459

Patent status:

No patent action is contemplated by NASA.

Source: H. P. Bruce
of the Martin Company,
under contract to
Marshall Space Flight Center
(MFS-13086)

NASA TECH BRIEF

NASA Tech Briefs are issued to summarize specific innovations derived from the U.S. space program, to encourage their commercial application. Copies are available to the public at 15 cents each from the Clearinghouse for Federal Scientific and Technical Information, Springfield, Virginia 22151.

Range Recording Technique Enables Four-Way Polarization Measurements

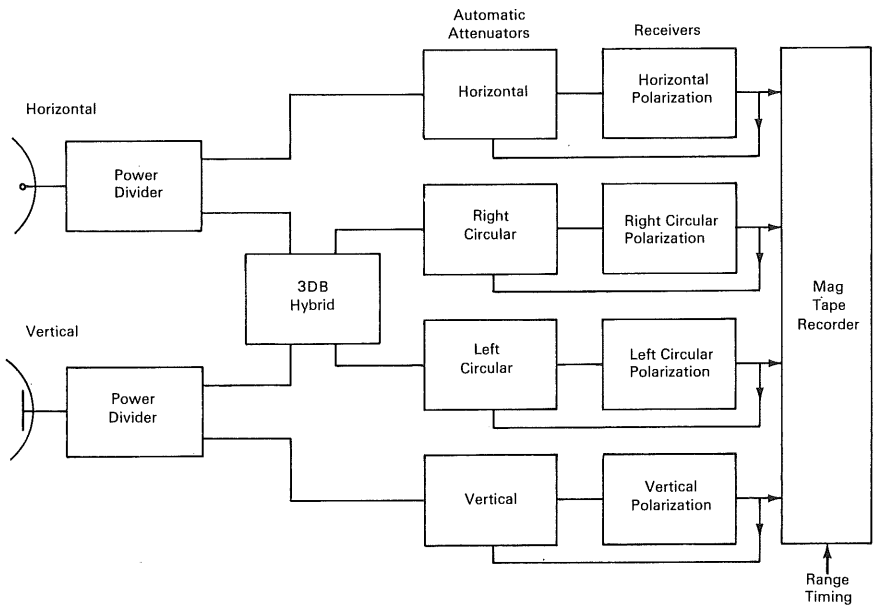

Accurate inflight signal-strength measurements are necessary to verify the design and performance of RF telemetry systems. Such measurements may also be used to analyze the effect of rocket exhaust flames on the phase and amplitude of signals. Other propagation anomalies may be revealed by accurate signal strength information.

Field-strength measurements on RF systems are made by the Atlantic Missile Range, but these measurements are secondary to data recording and are typically ±5 to 6 dB in error and occasionally an order of magnitude in error. This is to be expected, since normally the automatic gain control (AGC) voltage of standard data receivers is used for signal-strength recordings. This AGC voltage is logarithmic; and though it gives a wide dynamic range, it compresses the information, especially at high signal levels.

Other factors that limit the usefulness of the standard range recordings are:

(1) Early in the flights, the vehicle is close to the receiving stations and the receivers are near saturation.
(2) Frequency response is limited to a few cycles, or at best to a few hundred.
(3) Generally only one or two polarizations are recorded; four or more are needed for complete analysis.

A simple straightforward approach was used (block diagram); the best readily available commercial equipment was assembled with a minimum of

(continued overleaf)

This document was prepared under the sponsorship of the National Aeronautics and Space Administration. Neither the United States Government nor any person acting on behalf of the United States Government assumes any liability resulting from the use of the information contained in this document, or warrants that such use will be free from privately owned rights.

modification. A manually tracked antenna, the most critical part of the system, was developed. The system is novel in that it has signal strength recording responses from dc to 20 kHz.

To define the system performance completely requires all senses of polarization simultaneously; i.e., left circular, right circular, vertical, and horizontal polarizations. In addition to steady state or low-frequency-response average signal information, instantaneous information was desirable to determine the noise characteristics imposed on the signal. The data on the signal are neglected and used only for identification. Some of the design goals were to have a recording of all polarizations, linear signal strength, wide frequency response, mobility, and the best obtainable accuracy. Higher frequencies are also needed for particular aspects of studies for which the data are now being used.

Note:

Inquiries concerning these studies may be directed to:

Technology Utilization Officer
Marshall Space Flight Center
Huntsville, Alabama 35812
Reference: B67-10460

Patent status:

No patent action is contemplated by NASA.

Source: P. M. Swindall
(MFS-12447)

NASA TECH BRIEF

NASA Tech Briefs are issued to summarize specific innovations derived from the U.S. space program, to encourage their commercial application. Copies are available to the public at 15 cents each from the Clearinghouse for Federal Scientific and Technical Information, Springfield, Virginia 22151.

Protected, High-Temperature Connecting Cable

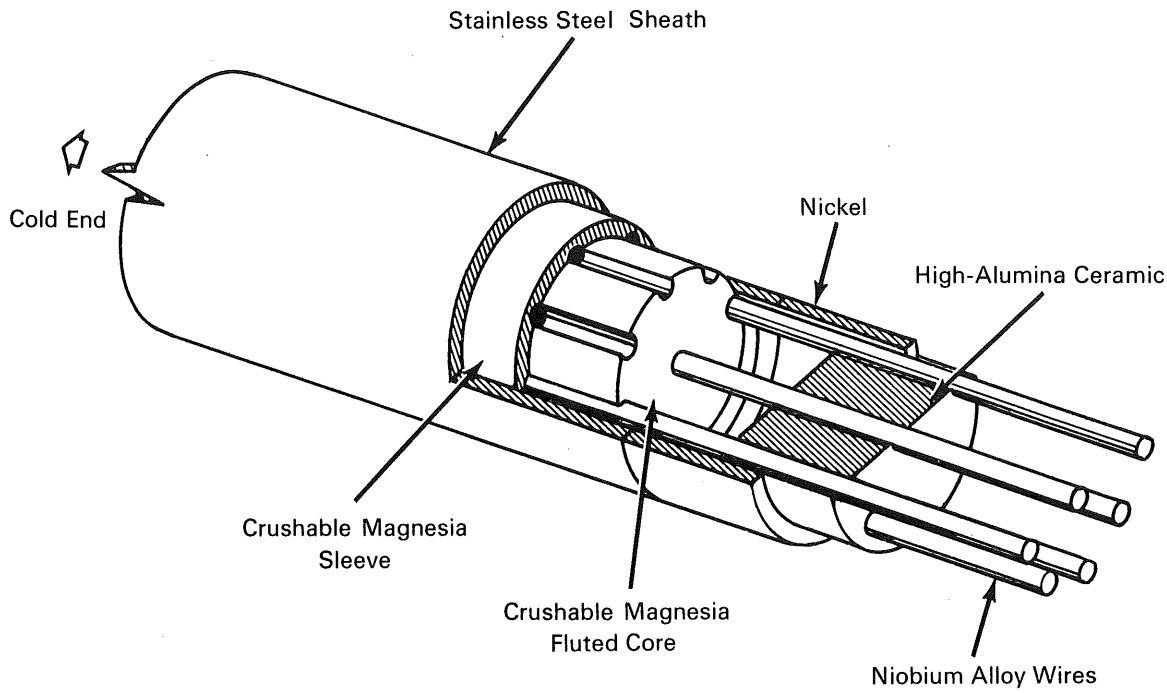

The problem:

To design a cable that will admit electrical leads into an 1800°F air-environment test chamber. One terminal of the cable must operate at 1800°F. The other terminal, some two feet away, must operate at about 200°F. The cable should have some bending capability for one or two flexures not exceeding 60 degrees. The cable must provide for nine niobium alloy conductors, each 0.017 inch in diameter; the outside diameter of the cable must not exceed 0.375 inch.

The solution:

A ceramic insulated, swaged stainless steel, sheathed, protective atmosphere cable.

How it's done:

The internal insulation of the cable is a two-piece crushable magnesia ceramic. One piece is a sleeve that fits over the other, a fluted piece in which wires are positioned. The ceramic–wire assembly is placed in the stainless steel sheath. High-alumina ceramic plugs are brazed to each of the nine wire leads. Short nickel sleeves are brazed to the alumina ceramic plugs at the same time. The assembly is pressure purged with argon, and the nickel sleeve is then TIG welded to the stainless steel sheath. This process is carried out sequentially on each end of the cable. A miniature multipin connector at the cold end of the cable allows connection to a standard flexible cable.

(continued overleaf)

This document was prepared under the sponsorship of the National Aeronautics and Space Administration. Neither the United States Government nor any person acting on behalf of the United States Government assumes any liability resulting from the use of the information contained in this document, or warrants that such use will be free from privately owned rights.

Notes:

1. The internal wires are protected from oxidation and embrittlement by the argon purge used during the TIG weld closure.
2. The niobium alloy wires have considerable ductility and elasticity. The thermal expansion mismatch caused by heating is partially absorbed by excess length between the alumina ceramic plugs and by the yielding of the wires.
3. Inquiries concerning this cable may be directed to:

   Technology Utilization Officer
   Lewis Research Center
   21000 Brookpark Road
   Cleveland, Ohio 44135
   Reference: B67-10461

Patent status:

No patent action is contemplated by NASA.

Source: R. E. Engdahl, et al,
of Consolidated Controls Corporation
under contract to
Lewis Research Center
(LEW-10149)

NASA TECH BRIEF

NASA Tech Briefs are issued to summarize specific innovations derived from the U.S. space program, to encourage their commercial application. Copies are available to the public at 15 cents each from the Clearinghouse for Federal Scientific and Technical Information, Springfield, Virginia 22151.

Automatic Testing Device Facilitates Noise Checks and Electronic Calibrations

The problem:

To design an automatic testing device that will (1) determine the noise content of the many analog inputs of a data acquisition system and (2) determine whether the electronic calibrations (EC) on some data channels are operating properly. The two checks, Noise and EC, were previously accomplished under manual control using a digital to analog converter and a storage type oscilloscope. The Noise check had to be accomplished on anywhere from 50 individual channels to a maximum capacity of 400 individual channels depending on the test. The EC check had to be made on all channels that were expected to provide calibration data for data reduction use. The number of channels providing EC data can typically range from approximately 30 to 150 channels. This method of checking necessitated several operators, was very time consuming, and required a good deal of judgment on the part of the operators.

The solution:

An automatic Digital Noise Checker that performs the following:

1. Operates on-line using real time data.
2. Operates off-line using prerecorded check data.
3. Utilizes digital data rather than reconstructed analog data.
4. Sequences automatically through all system channels.
5. Prints on paper the channel, noise content, and a representative data value occurring in a number of samples for a Noise check.
6. Prints on paper the channels that EC in a predetermined selectable region for an EC check.

How it's done:

The Digital Noise Checker consists of four digital logic chassis, a control panel, a printer, and power supplies. The operation of the unit is set up to accommodate four operating modes. Modes 1 and 4 are provided for automatic Noise checks, Mode 2 is provided for the EC check. Mode 3 provides a multiplexer pattern sorting capability for the data acquisition system. The unit can accept inputs from either of two data acquisition recording systems by switch selection.

The unit uses a theory of limits to accomplish its tasks. The unit monitors the data samples from a single channel until the number of preselected samples have occurred and then advances control to monitor the data samples from the next channel that is sampled by the data acquisition system. The process is continued until all channels that are sampled have been monitored. Each time monitoring is completed for a channel, the results are printed, if printing is required by the processing, and manually selectable print options are available.

Notes:

1. It is anticipated that this unit will be used for the following:
   a. Perform Noise checks with results for all channels containing flags for noise levels above predetermined selected limits.
   b. Perform EC checks with a printout of the channels that have data falling within a predetermined selectable region.
   c. Sort multiplexer patterns for system setup use.
   d. Perform channel data histograms by printing out periodic data samples for a selected channel.

(continued overleaf)

This document was prepared under the sponsorship of the National Aeronautics and Space Administration. Neither the United States Government nor any person acting on behalf of the United States Government assumes any liability resulting from the use of the information contained in this document, or warrants that such use will be free from privately owned rights.

e. Perform zero drift tests by printing out data values for all channels for repeated calibrate inputs.
f. Perform gain stability tests by printing out data values for all channels for repeated calibrate inputs.

2. Inquiries concerning this invention may be directed to:

Technology Utilization Officer
Lewis Research Center
21000 Brookpark Road
Cleveland, Ohio 44135
Reference: B67-10467

Patent status:

Inquiries about obtaining rights for the commercial use of this invention may be made to NASA, Code GP, Washington, D.C. 20546.

Source: Joseph L. Harrold
and Carl F. Weegmann
(LEW-10173)

NASA TECH BRIEF

NASA Tech Briefs are issued to summarize specific innovations derived from the U.S. space program, to encourage their commercial application. Copies are available to the public at 15 cents each from the Clearinghouse for Federal Scientific and Technical Information, Springfield, Virginia 22151.

Series Transistors Isolate Amplifier from Flyback Voltage

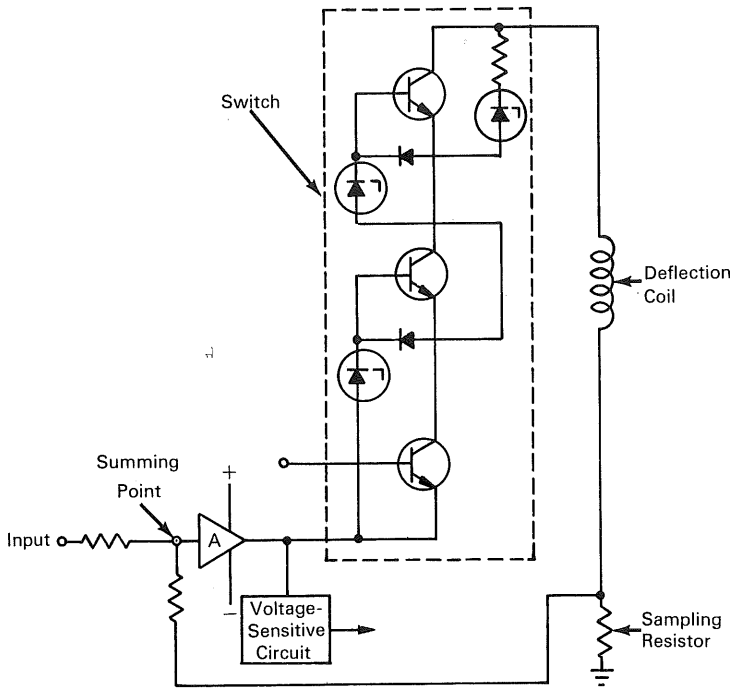

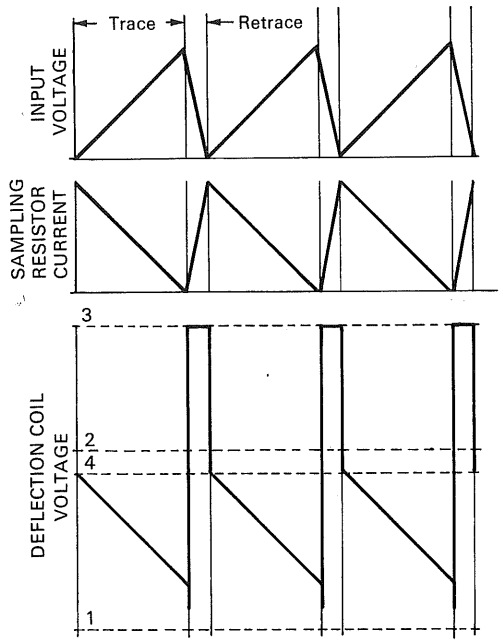

The problem:

To design a circuit that will allow relatively high (1.5 ampere peak-to-peak) sawtooth currents to be passed through a deflection coil (such as is used for horizontal deflection in an image orthicon) and isolate the coil driving amplifier from the flyback voltage (900 volts). This flyback voltage, or back emf, is developed when the current through the coil is suddenly reversed or stopped, as in the case of a sawtooth waveform. The retrace time of a typical sawtooth waveform is much shorter than the trace time. The flyback voltage developed during the retrace time is consequently much larger in magnitude than the voltage generated during the trace time. This flyback voltage generally exceeds the voltage handling capability of the coil driving amplifier.

The solution:

A circuit incorporating a switch consisting of transistors in series with the driving amplifier and deflection coil. The switch disconnects the deflection coil from the amplifier during the retrace time, when the high-voltage spike is developed.

How it's done:

The high-gain, dc-coupled amplifier (A) (shown in the schematic, with certain details omitted for clarity) drives the deflection coil both positively and negatively through the series switch. The deflection-coil

(continued overleaf)

This document was prepared under the sponsorship of the National Aeronautics and Space Administration. Neither the United States Government nor any person acting on behalf of the United States Government assumes any liability resulting from the use of the information contained in this document, or warrants that such use will be free from privately owned rights.

current waveform is developed across the sampling resistor and fed back to the summing point. As a consequence, the current in the deflection coil is a sawtooth waveform which leads the input voltage waveform by 180 degrees. The resulting voltage waveform across the coil is shown with four levels indicated by numerals to explain the operation. Voltages between points 1 and 2 are handled by the amplifier. The portion between points 2 and 3 constitutes the high flyback voltage developed across the switch. When the amplitude of the voltage spike is at the level indicated by point 4, the voltage-sensitive circuit is triggered to generate a turn-off pulse. This pulse is applied between the bases and emitters of the transistors in the switch, turning them off. That portion of the voltage spike between points 2 and 3 is thus prevented from reaching the driving amplifier. Each of the switch transistors is kept within its collector-to-emitter voltage rating by the rectifier diodes and zener diodes connected in series between the emitters and bases of the transistors.

Notes:

1. The switch may be made up of as many transistors as necessary to provide a voltage capability greater than the flyback voltage.
2. Inquiries concerning this circuit may be directed to:

   Technology Utilization Officer
   Manned Spacecraft Center
   Houston, Texas 77058
   Reference: B67-10468

Patent status:

Inquiries about obtaining rights for the commercial use of this invention may be made to NASA, Code GP, Washington, D.C. 20546.

Source: William Banks
of General Dynamics Corporation
under contract to
Manned Spacecraft Center
(MSC-11023)

NASA TECH BRIEF

NASA Tech Briefs are issued to summarize specific innovations derived from the U.S. space program, to encourage their commercial application. Copies are available to the public at 15 cents each from the Clearinghouse for Federal Scientific and Technical Information, Springfield, Virginia 22151.

Ultraminiature Television Camera

An ultraminiature television camera with a total volume of 20.25 cubic inches has been developed. The design utilizes microelectronic modular assembly packaging techniques and contains a magnetically deflected and electrostatically focused vidicon, automatic gain control circuit, power supply, and transmitter. The camera requires 28 vdc power, operates on UHF, and accommodates standard 8-mm optics. Maximum resolution has been obtained by using interlace scan techniques.

The camera to this point has displayed resolution and performance favorable to the successful development of an ultraminiature television system. The camera has demonstrated its ability of transmitting a picture with resolution in excess of 400 lines and to maintain the size requirements demanded of an ultraminiature instrument.

The ultraminiature television camera that has been designed conforms to conventional television practice and is compatible with standard commercially available television monitors.

Complete details of this development are contained in *Ultraminiature Television Camera,* by R. J. Deterville and N. Drago, Teledyne Systems Company, Final Report, July 1966. Copies of this report are available from:

Technology Utilization Officer
Marshall Space Flight Center
Huntsville, Alabama 35812
Reference: B67-10469

Patent status:

Inquiries about obtaining rights for the commercial use of this invention may be made to NASA, Code GP, Washington, D.C. 20546.

Source: R. J. Deterville and N. Drago
of Teledyne Systems Company
under contract to
Marshall Space Flight Center
(MFS-11967)

Category 01

This document was prepared under the sponsorship of the National Aeronautics and Space Administration. Neither the United States Government nor any person acting on behalf of the United States Government assumes any liability resulting from the use of the information contained in this document, or warrants that such use will be free from privately owned rights.

NASA TECH BRIEF

NASA Tech Briefs are issued to summarize specific innovations derived from the U.S. space program, to encourage their commercial application. Copies are available to the public at 15 cents each from the Clearinghouse for Federal Scientific and Technical Information, Springfield, Virginia 22151.

Technique Eliminates High Voltage Arcing at Electrode–Insulator Contact Area

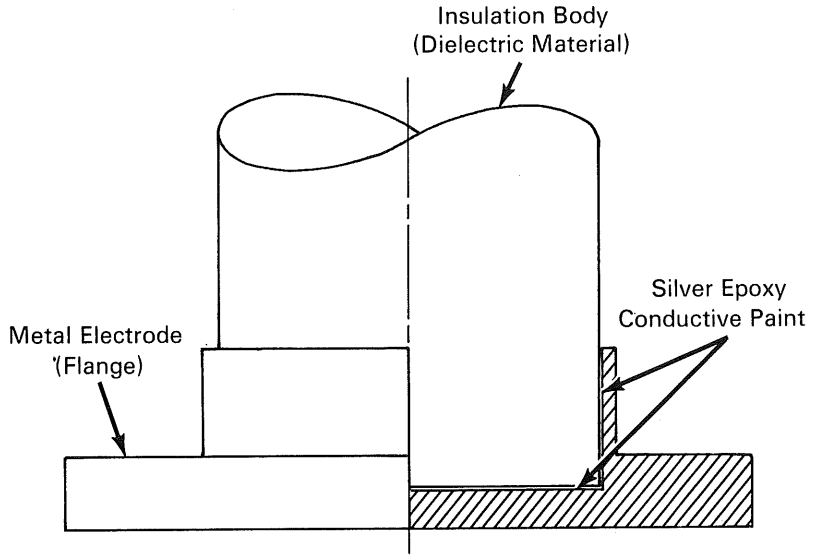

The problem:

High-voltage (600,000 volts dc) electrodes supplying electrical power to vacuum facilities may fail at the electrode–insulator contact area due to arcing across microscopic surface irregularities. When high-voltage electrical current is imposed on the electrode, electrical fields are created in the microscopic surface irregularities at the electrode–insulator contact face. Entrapped gases, particularly on the insulator interface, form a conductive path for electrical arcing. Previous methods to resolve this problem utilized highly polished contact surfaces, insulators molded to the electrodes, etc. These methods were fairly complicated to accomplish and were costly.

The solution:

Coat the electrode–insulator contact area with silver epoxy conductive paint and force the electrode and insulator tightly together into a permanent connection.

How it's done:

An electrode–insulator connection is designed as a socket fitting. The two mating parts are fabricated with the inside diameter of the female part 0.003 inch less than the outside diameter of the male part. The male part is shrunk by cooling in liquid nitrogen, the mating surface of the female part is painted with silver epoxy conductive paint, and the two parts are joined. As the male part expands in warming up to ambient temperature, the silver epoxy conductive paint is forced into the surface irregularities of both parts and fills them completely. The result is complete and uniform surface contact.

(continued overleaf)

This document was prepared under the sponsorship of the National Aeronautics and Space Administration. Neither the United States Government nor any person acting on behalf of the United States Government assumes any liability resulting from the use of the information contained in this document, or warrants that such use will be free from privately owned rights.

Notes:

1. High mechanical strength and intimate contact at the electrode–insulator junction are derived by this method; however, the dielectric material of construction for the insulator must be capable of withstanding compression loads such as those applied by the press fit procedure described.
2. Insulators treated in this manner have been operated at 250,000 volts. An insulator feedthrough for one research facility was successfully tested at potentials of 600,000 volts from vacuum to atmosphere pressure.
3. Inquiries concerning this innovation may be directed to:

   Technology Utilization Officer
   Lewis Research Center
   21000 Brookpark Road
   Cleveland, Ohio 44135
   Reference: B67-10470

Patent status:

No patent action is contemplated by NASA.

Source: Glenn Mealy
(LEW-10133)

NASA TECH BRIEF

NASA Tech Briefs are issued to summarize specific innovations derived from the U.S. space program, to encourage their commercial application. Copies are available to the public at 15 cents each from the Clearinghouse for Federal Scientific and Technical Information, Springfield, Virginia 22151.

Transient Sensor Development

An overall analysis has been made of the historical development of pulse width/amplitude-, rise time/amplitude-, and noise-sensors and recommendations made for improvements in design, calibration techniques, and techniques to make all the sensors compatible for operation in one system. In this way, transients interfering with the design operation of receivers could be individually isolated and identified. The sensors, originally of discrete component design, were updated to integrated circuit design concepts with one, the rise time/amplitude sensor design being reduced to an operational prototype. The integrated circuit designs can be expected to be less critical in calibration, more stable over the operating temperature range, require less power, and be much smaller than equivalent discrete component designs.

The pulse width/amplitude sensor design consists of a dwell and integrator circuit feeding an operational amplifier used to trigger an output generator in the form of a flip–flop circuit. The dwell circuit sets up a dead zone that includes both the positive and negative regions about zero potential. The integrator determines how much time will elapse before the dwell circuit bias is overcome by the input signal amplitude. When this occurs, the operational amplifier triggers the flip–flop causing it to reverse state. With the integrator circuit removed, the sensor becomes a threshold level detector.

The rise time/amplitude sensor is designed to detect positive voltage transients and leave an output with both a positive and a negative voltage level shift. The sensor monitors the leading edge of a pulse and determines the time elapsed between the initial excursion (usually at the theoretical 10% point) and some predetermined amplitude corresponding to a theoretical 90% point. When a pulse appears, having an amplitude corresponding to a 90% point and a rise time window between 50 and 5000 nanoseconds, operational amplifiers switch an output generator to produce an output no-go condition. If the output is high, a no-go condition exists and the output generator is reset to a go condition by an external source. Amplitude and rise time window settings are adjustable; however, they are not independent. The prototype sensor exhibits current drain of approximately 50 ma total plus an acceptable rise time sensitivity of 26 nanoseconds (17.3%) change over a temperature range of 50° to 110°F.

The noise sensor design should detect conducted interference on dc power leads of the receivers and have a fixed frequency and bandwidth but be adaptable to a wide range of other frequencies. Input sensitivity should be adjustable from 10 to 100 mv. Primary current drain is less than 50 ma at +12 and −6 vdc and the output is by means of a bistable flip–flop capable of being reset by an external source. Because the circuit bandwidth increases as the noise amplitude increases, an amplitude in excess of 100 mv could cause a no-go output outside the desired bandwidth of the sensor and there would be no way to identify what triggered the no-go condition. To overcome this, the sensor would have to be only amplitude sensitive within the desired bandwidth. This would increase the complexity of the sensor but the exact frequency generating a noise problem could be detected and steps taken to eliminate it.

Note:

Inquiries concerning this invention may be directed to:

Technology Utilization Officer
Marshall Space Flight Center
Huntsville, Alabama 35812
Reference: B67-10471

(continued overleaf)

This document was prepared under the sponsorship of the National Aeronautics and Space Administration. Neither the United States Government nor any person acting on behalf of the United States Government assumes any liability resulting from the use of the information contained in this document, or warrants that such use will be free from privately owned rights.

Patent status:

Inquiries about obtaining rights for the commercial use of this invention may be made to NASA, Code GP, Washington, D.C. 20546.

Source: J. Cash
of Federal Electric Corporation
under contract to
Marshall Space Flight Center
(MFS-13370 and 13371)

NASA TECH BRIEF

NASA Tech Briefs are issued to summarize specific innovations derived from the U.S. space program, to encourage their commercial application. Copies are available to the public at 15 cents each from the Clearinghouse for Federal Scientific and Technical Information, Springfield, Virginia 22151.

Blood Pressure Reprogramming Adapter Assists Signal Recording

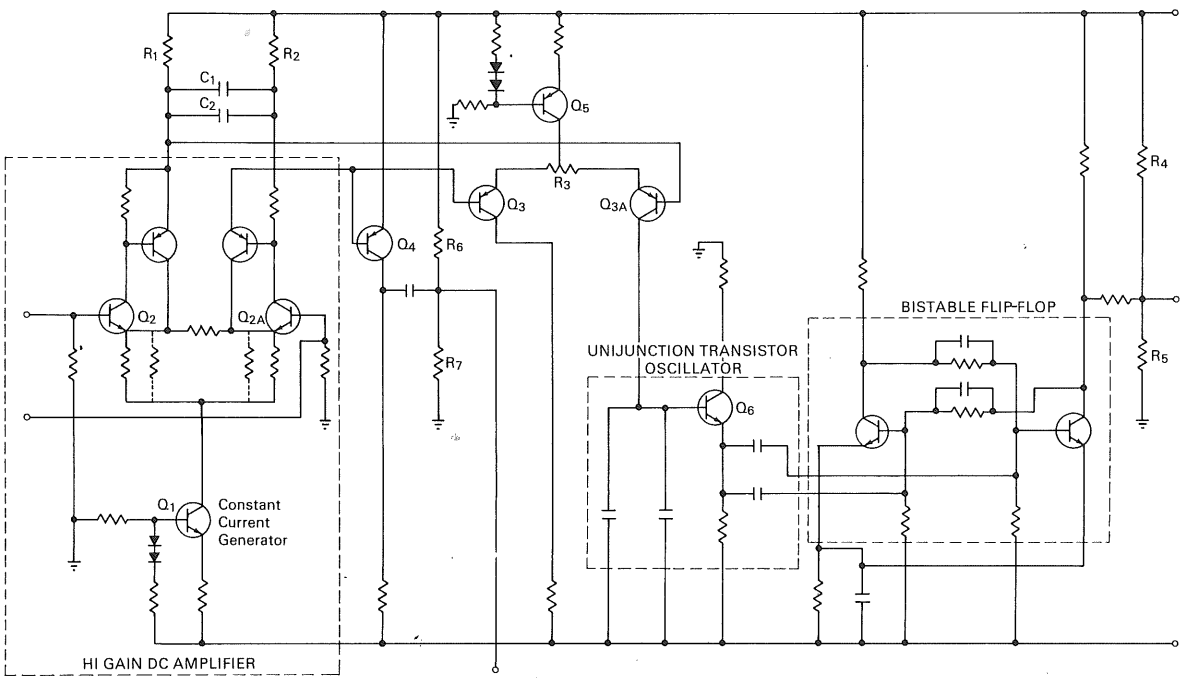

The blood pressure signal contains two components that are mixed together in telemetry applications, a dc pressure signal and an ac (36 cps) Korotkoff sounds signal. Most tape recorders are incapable of recording the composite signal on the same channel because of their frequency response limitations.

A blood pressure reprogramming adapter has been designed to separate the two signals so that the Korotkoff sounds are recorded on one channel as received while the dc pressure signal is converted to FM and recorded on a second channel. This circuitry has the advantage over other conversion devices such as rc multivibrators, square loop transformer oscillators, and voltage controlled oscillators, in its inherent linearity and low power drain.

Basically, the circuit consists of a differential dc amplifier that varies the output of a constant current generator that in turn varies the frequency of a unijunction transistor oscillator. Output of the oscillator is fed to a bistable flip-flop that produces a symmetrical output. The first five transistors form a high gain dc amplifier with Q_1 acting as a constant current source. Transistors Q_2 and Q_{2A} form a matched pair of NPN silicon planar transistors while Q_3 and

(continued overleaf)

This document was prepared under the sponsorship of the National Aeronautics and Space Administration. Neither the United States Government nor any person acting on behalf of the United States Government assumes any liability resulting from the use of the information contained in this document, or warrants that such use will be free from privately owned rights.

Q_{3A} form a matched pair of PNP planar transistors and these are so connected that they provide high current gain and low temperature drift. Capacitors C_1 and C_2 across R_1 and R_2 limit the ac gain at 36 cps to approximately 1.6, which provides adequate signal while preventing interference to the oscillator. Transistor Q_4 and capacitor C_3 remove the Korotkoff sounds from the pressure ramp and apply them to output 1. Transistor Q_{3A} forms the second stage of the dc amplifier with Q_5 acting as its current source. Current in Q_{3A} is set by adjusting R_3 with the input shorted. The repetition rate of Q_6 is directly proportional to the current in Q_{3A} which, once set, is controlled by the differential voltage at its bases, originally determined by the input voltage. Output from Q_6 is in the form of sharp pulses which the tape recorder is unable to handle; consequently, the pulses are used to trigger the bistable flip–flop. Output of the bistable is a symmetrical square wave whose frequency is one half the unijunction oscillator frequency. Resistors R_4, R_5, R_6, and R_7 attenuate this signal and provide the correct bias for compatibility with the tape recorder response.

Notes:

1. This circuitry draws only 2 ma from the -10v supply and 1 ma from the $+10$v supply and is absolutely linear from 10 cps to 100 cps.
2. Inquiries concerning this invention may be directed to:

   Technology Utilization Officer
   Manned Spacecraft Center
   Houston, Texas 77058
   Reference: B67-10475

Patent status:

This invention is owned by NASA, and a patent application has been filed. Royalty-free, nonexclusive licenses for its commercial use will be granted by NASA. Inquiries concerning license rights should be made to NASA, Code GP, Washington, D.C. 20546.

Source: Howard A. Vick
(MSC-265)

NASA TECH BRIEF

NASA Tech Briefs are issued to summarize specific innovations derived from the U.S. space program, to encourage their commercial application. Copies are available to the public at 15 cents each from the Clearinghouse for Federal Scientific and Technical Information, Springfield, Virginia 22151.

Converter Provides Constant Electrical Power at Various Output Voltages

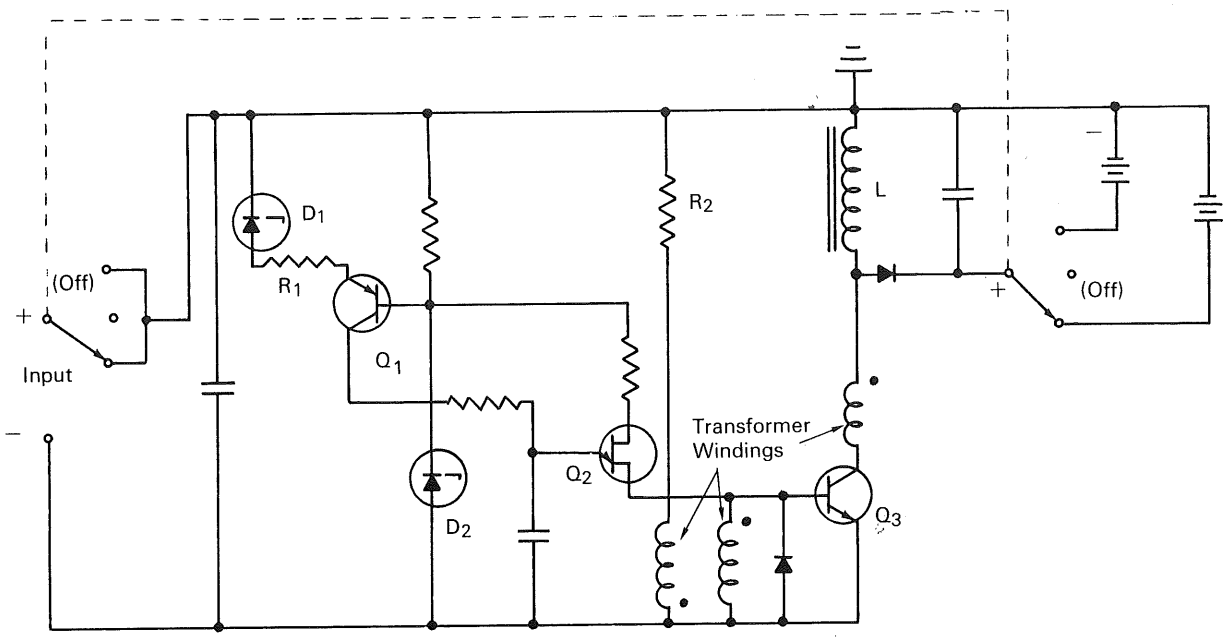

The problem:

To design a power converter that will transfer electrical energy at a constant rate from a solar cell source to a number of individual batteries, which are to be charged one at a time. For a particular application on a spacecraft, the power converter was required to invert the polarity of the solar cell source and also provide the correct charging voltage, which ranged from 3 to 25 volts.

The solution:

A circuit that utilizes an inverted flyback technique as a means of transferring energy to the battery to be charged. Energy is stored in an inductor during a portion of the cycle and is released to the battery during the remainder of the cycle. The power (product of the input voltage and current) corresponding to the peak power point of the voltage vs current characteristic of the solar cell source is transferred to the battery, and does not change as a function of battery voltage.

How it's done:

The saturable core transformer (consisting of three windings on one core) and transistor Q_3 comprise the flyback switching circuit. This transformer determines the energy storage period of the inductor L. Q_2 supplies the initial turn-on pulse to Q_3. At the end of the time required to energize the inductor (L) the transformer saturates. Under this condition, Q_3 is turned off and the stored energy in L is passed to the output circuit which has previously been switched to the desired battery. During this charging period, the

(continued overleaf)

This document was prepared under the sponsorship of the National Aeronautics and Space Administration. Neither the United States Government nor any person acting on behalf of the United States Government assumes any liability resulting from the use of the information contained in this document, or warrants that such use will be free from privately owned rights.

transformer core is being reset through the transformer winding associated with resistor R_2.

The operating level of the input voltage is determined by the input sensing circuit comprised of D_1, R_1, Q_1, and D_2. These components are selected for operation at the peak power point on the voltage vs current curve of the solar cell source. Resistor R_1 limits the maximum current of Q_1. A potentiometer may be substituted for R_1 for setting the circuit to compensate for any variation in the peak power point of the solar cell source.

Note:

Inquiries concerning this innovation may be directed to:

Technology Utilization Officer
Goddard Space Flight Center
Greenbelt, Maryland 20771
Reference: B67-10481

Patent status:

No patent action is contemplated by NASA.

Source: John Paulkovich
(GSFC-519)

NASA TECH BRIEF

NASA Tech Briefs are issued to summarize specific innovations derived from the U.S. space program, to encourage their commercial application. Copies are available to the public at 15 cents each from the Clearinghouse for Federal Scientific and Technical Information, Springfield, Virginia 22151.

Surface-Crack Detection by Microwave Methods

The problem:

To develop a surface-crack detection system that can be used to examine metallic surfaces with a noncontacting probe. Such a system has application to the continuous observation of the growth of flaws during fatigue or fracture tests.

The solution:

A microwave detection system where the microwave signal is reflected from the surface under investigation. The change in the reflected signal from the incident one is an indication of the existence of surface flaws.

How it's done:

A microwave metal-surface-flaw detector is used to irradiate a flawed metal surface by electromagnetic microwave energy. This irradiation results in re-emission of electromagnetic energy from the surface in a pattern of eigenmodes different from those of the original irradiating signal. The generation of a spatial periodic signal with a polarization modulator induces a characteristic received pattern which is correlated either with an inserted reference pattern or autocorrelated with itself to detect a change in the surface properties of the test specimen.

Notes:

1. It has been demonstrated that this microwave technique can detect flaws and scratches as small as 100 microinches. The system is noncontacting, nondestructive, and is potentially small enough to be hand carried over a surface under tests.
2. The system is under development and improvements are being made.
3. Additional details are contained in *Surface-Crack Detection by Microwave Methods* by L. Feinstein and R. Hruby, NASA, Ames Research Center; a paper presented at Sixth Symposium on Nondestruction Evaluation of Aerospace and Weapons Systems Components and Materials, San Antonio, Texas, 17–19 April 1967. Copies are available from:

   Technology Utilization Officer
   Ames Research Center
   Moffett Field, California 94035
   Reference: B67-10482

Patent status:

Inquiries about obtaining rights for the commercial use of this invention may be made to NASA, Code GP, Washington, D.C. 20546.

Source: L. Feinstein and R. Hruby
(ARC-10009)

Category 01

This document was prepared under the sponsorship of the National Aeronautics and Space Administration. Neither the United States Government nor any person acting on behalf of the United States Government assumes any liability resulting from the use of the information contained in this document, or warrants that such use will be free from privately owned rights.

December 1967

Reference Harold #777 circuits

Brief 67-10487

NASA TECH BRIEF

NASA Tech Briefs are issued to summarize specific innovations derived from the U.S. space program, to encourage their commercial application. Copies are available to the public at 15 cents each from the Clearinghouse for Federal Scientific and Technical Information, Springfield, Virginia 22151.

Long Time Constant Timer Requires No Recovery Time

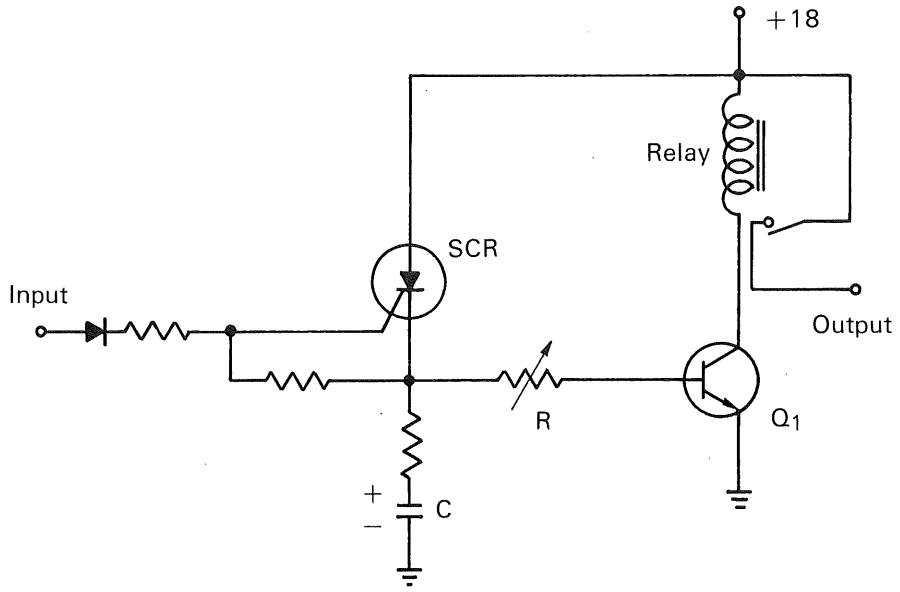

The problem:

Many circuits for timing are in common use, especially R–C discharge circuits, but all require some recovery period after turnoff before they can be retriggered.

The solution:

A circuit for timing that will deliver relatively long pulses yet requires no recovery time after turnoff. It can even be retriggered before it has timed out and turned off.

How it's done:

When a positive pulse is applied to the input terminal, the silicon controlled rectifier (SCR) is turned on, current flows through it to turn Q_1 on and charge capacitor C. When C is sufficiently charged, current through the SCR drops below its required holding current level, the SCR turns off and C begins discharging through R into the base of Q_1. In the meantime, Q_1, having been turned on, has pulled in the relay that provides the output connection. As C discharges, current in the collector of Q_1 and in the relay starts to decrease until it drops below the relay latching level, at which the relay opens breaking the output connection. The circuit may be retriggered at any time after SCR shutoff, provided the trigger amplitude is sufficiently greater than the charge on C at that time.

Notes:

1. For a given C, the range of times that are available is limited at the low end by that value of R which causes the Q_1 base current to exceed the holding current rating of the SCR; and at the high end by that value of R which will not pass sufficient transistor current to pull in the relay.

(continued overleaf)

This document was prepared under the sponsorship of the National Aeronautics and Space Administration. Neither the United States Government nor any person acting on behalf of the United States Government assumes any liability resulting from the use of the information contained in this document, or warrants that such use will be free from privately owned rights.

2. Timed output pulses of up to a minute or so are obtainable with the circuit as shown. Longer pulses are obtainable by substituting a field effect transistor for Q_1 or by replacing the relay with a Schmitt trigger so that lower base current in Q_1 may be used.
3. Inquiries concerning this invention may be directed to:

   Technology Utilization Officer
   Goddard Space Flight Center
   Greenbelt, Maryland 20771
   Reference: B67-10487

Patent status:

Inquiries about obtaining rights for the commercial use of this invention may be made to NASA, Code GP, Washington, D.C. 20546.

Source: Charles Raymond Somerlock
(GSC-10091)

AEC-NASA TECH BRIEF

AEC-NASA Tech Briefs describe innovations resulting from the research and development program of the U.S. AEC or from AEC-NASA interagency efforts. They are issued to encourage commercial application. Tech Briefs are published by NASA and may be purchased, at 15 cents each, from the Clearinghouse for Federal Scientific and Technical Information, Springfield, Virginia 22151.

Digital Servo Readout System Increases Recording Accuracy of Servo-Balance Scales

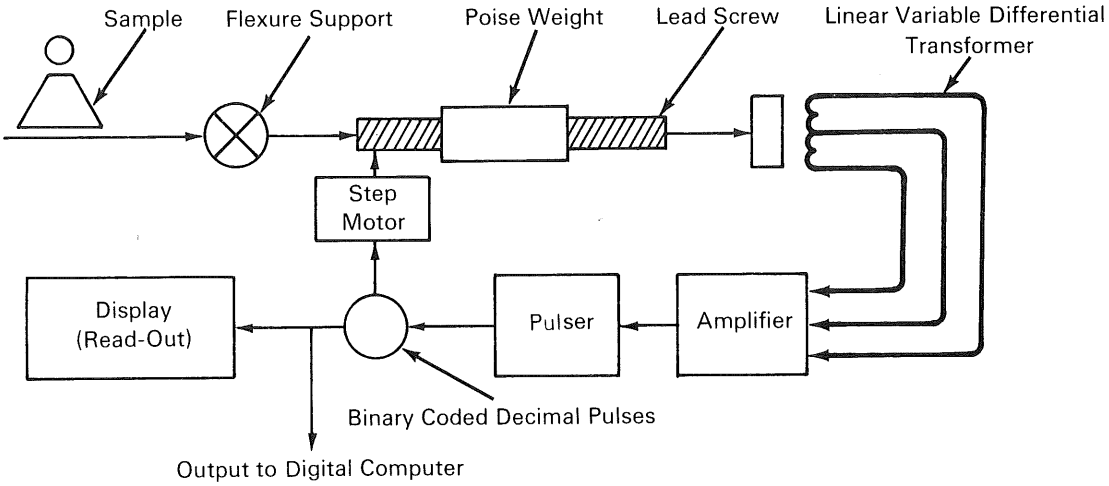

The problem:

Commercially available servo-balance weighing scales had poor resolution due to the analog- (dc) type servo mechanism employed. The readout did not accurately track the poise weight for balancing the system. Also, the dc servo was affected by temperature and electronic noise. In addition to the need for improving these conditions, it was necessary to develop a minimum complexity system which would adapt the readout mechanism for direct input to a digital computer.

The solution:

Replace the analog servo readout mechanism with a digital servo unit.

How it's done:

The digital servo unit is driven by a linear variable differential transformer (LVDT) error signal to deliver pulses in a direction that reduces error. These pulses drive a step motor which turns the lead screw to position the balance poise weight and bring the LVDT to zero position. The pulses also power a local display which gives the sample weight directly. The pulses can also be fed into a digital data computer system. Pulses are BCD (Binary Coded Decimal).

Notes:

1. Use of the digital servo mechanism with the zero displacement balance for weighing was not adversely affected by temperature changes and electronic noise. Reliability was increased due to the reduction of the number of components.
2. The digital servo readout system was applied to a typical servo-balance scale for laboratory use, weighing samples up to 2 kilograms to within 0.05 gram accuracy.

(continued overleaf)

This document was prepared under the sponsorship of the Atomic Energy Commission and/or the National Aeronautics and Space Administration. Neither the United States Government nor any person acting on behalf of the United States Government assumes any liability resulting from the use of the information contained in this document, or warrants that the use of any information, apparatus, method, or process disclosed in this document may not infringe privately owned rights.

3. Inquiries concerning this innovation may be directed to:

Technology Utilization Officer
AEC–NASA Space Nuclear Propulsion Office
U.S. Atomic Energy Commission
Washington, D.C. 20545
Reference: B67-10496

Patent status:

No patent action is contemplated by AEC or NASA.

Source: L. C. Faupell
of the Westinghouse
Astronuclear Laboratory
and J. B. Davies
of the Tridyne Corporation
under contract to
AEC–NASA Space Nuclear
Propulsion Office
(NUC-10125)

AEC-NASA TECH BRIEF

AEC-NASA Tech Briefs describe innovations resulting from the research and development program of the U.S. AEC or from AEC-NASA interagency efforts. They are issued to encourage commercial application. Tech Briefs are published by NASA and may be purchased, at 15 cents each, from the Clearinghouse for Federal Scientific and Technical Information, Springfield, Virginia 22151.

High Temperature Thermocouple Design Provides Gas Cooling without Increasing Overall Size of Unit

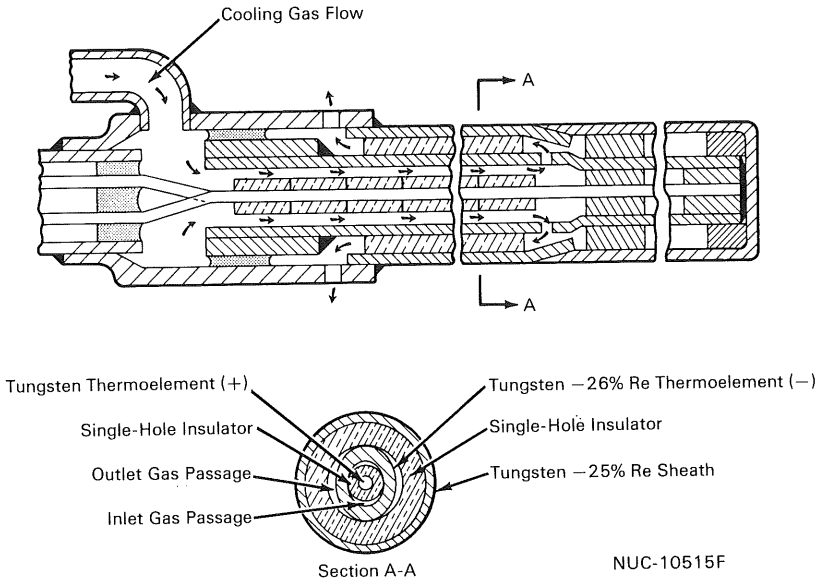

The problem:

The number of materials available for use in thermocouples to measure temperatures above 4000° R is quite limited, and insulating the thermoelements is extremely difficult since most materials begin to ionize or become semiconductors at these temperatures. Previous cooling designs required extra space to accommodate a tube to carry the coolant or a split tube with a separator to channel the gas.

The solution:

A thermocouple utilizing a thermoelement of noncircular cross section with insulation of circular cross section to provide space for coolant flow.

How it's done:

This thermocouple design employs an elliptically shaped tungsten–rhenium tube as a negative thermoelement and a round tungsten wire as the positive element. Insulators of circular cross section are used between the elements, thus providing a path for the flow of coolant gas down the probe. A similar arrangement of insulators between the tungsten–rhenium tube and the outer sheath provides the return path. Several small holes are drilled near the hot end to allow gas to flow through the tungsten–rhenium thermoelement wall. The direction of the gas flow could, of course, be from the outer sheath to the inner sheath if dictated by design conditions. The direction of flow is not a controlling factor.

A corollary to this design would be to use thermoelements of circular cross section with insulators of noncircular cross section. This approach would

(continued overleaf)

This document was prepared under the sponsorship of the Atomic Energy Commission and/or the National Aeronautics and Space Administration. Neither the United States Government nor any person acting on behalf of the United States Government assumes any liability resulting from the use of the information contained in this document, or warrants that the use of any information, apparatus, method, or process disclosed in this document may not infringe privately owned rights.

probably require more space for the same relative performance as the unit described above.

Notes:

1. This development is in the conceptual stage only, and, as of date of publication of this Tech Brief, neither a model nor prototype has been constructed.
2. Inquiries concerning this invention may be directed to:

   Technology Utilization Officer
   AEC–NASA Space Nuclear Propulsion Office
   U.S. Atomic Energy Commission
   Washington, D.C. 20545
   Reference: B67-10497

Patent status:

Inquiries about obtaining rights for the commercial use of this invention may be made to NASA, Code GP, Washington, D.C. 20546.

Source: G. J. Zellner
of the Westinghouse
Astronuclear Laboratory
under contract to
AEC–NASA Space Nuclear
Propulsion Office
(NUC-10515)

AEC-NASA TECH BRIEF

AEC-NASA Tech Briefs describe innovations resulting from the research and development program of the U.S. AEC or from AEC-NASA interagency efforts. They are issued to encourage commercial application. Tech Briefs are published by NASA and may be purchased, at 15 cents each, from the Clearinghouse for Federal Scientific and Technical Information, Springfield, Virginia 22151.

Vanadium Diaphragm Electrode Serves as Hydrogen Diffuser in Lithium Hydride Cell

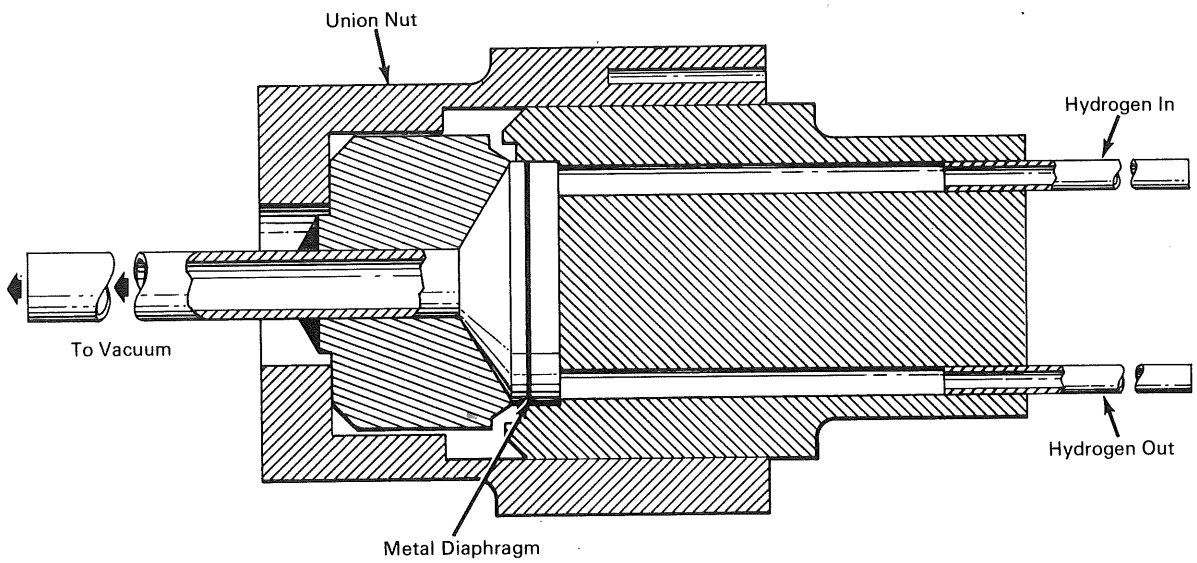

The problem:

To discover an alloy that is cheaper than silver–palladium, for use as a hydrogen diffuser in a lithium hydride cell. The success of a regenerative lithium hydride cell, employing a diaphragm-type electrode, depends on the current density achievable when the cell is operated under load. Current density is limited by the hydrogen permeation rates of the electrode diaphragm. Though the permeation rates of such alloys as silver–palladium are very high, they are unattractive because of reactivity with lithium metal forming Li_2Pd. Some of the transition metals have high diffusion rates, but also have the undesirable property of forming stable oxides and nitrides which are not reduced by hydrogen

The solution:

Vanadium, used as the electrode (hydrogen diffuser) material has produced a successful regenerative lithium hydride cell. A cell, using a 0.25 mm thick vanadium diaphragm electrode, has been operated for 540 hours. Current densities obtained during operation were 180 ma/cm^2 at one-half open-circuit voltage. Vanadium was investigated because in the group V-a transition metals of the Periodic Table, it is among the highest in hydrogen gas solubility and permeability; is least sensitive to adverse surface effects; maintains good mechanical strength above 400°C in hydrogen atmospheres; and appears to be compatible with all alkali-halide electrolytes and lithium metals.

(continued overleaf)

This document was prepared under the sponsorship of the Atomic Energy Commission and/or the National Aeronautics and Space Administration. Neither the United States Government nor any person acting on behalf of the United States Government assumes any liability resulting from the use of the information contained in this document, or warrants that the use of any information, apparatus, method, or process disclosed in this document may not infringe privately owned rights.

How it's done:

The effectiveness of a diaphragm electrode depends upon its hydrogen diffusion rate. A high diffusion rate is achieved by expanding the metal lattice with dissolved hydrogen. The hydrogen permeation of pure vanadium was investigated over the temperature range of 450° to 550°C and 1 atm hydrogen pressure. The activation energy required was 14.2 ± 0.4 kcal/g-atom^{-1}.

The diffusion tests were run using the apparatus shown. The entire assembly, except for the diaphragm, was made of stainless steel. The diaphragm seal was made by tightening the union nut onto the union body, which forced the diaphragm into the proper position. The diameter of the diaphragm was 25.40 mm and its thickness 0.254 mm. Wall thickness of the assembly components was large in comparison to the diaphragm.

The permeation rate was measured at 1 atm hydrogen pressure, and the hydrogen gas flow into the system was arranged such that the free volume in front of the diaphragm could be flushed with purified hydrogen at the temperature of measurement. The accuracy of the gas measuring burets exceeded 1% and the reading precision about 0.1%.

Notes:

1. This information should be of interest to chemical process industries using pure hydrogen and to the petroleum industry, as well as to chemical engineering researchers.
2. Earlier work, conducted by C. E. Crouthamel, on a diffusion electrode for a regenerative galvanic cell has been published in AEC–NASA Tech Brief 67-10189, *Iron Serves as Diffusion Barrier in Thermally Regenerative Galvanic Cell.*
3. Additional information covering hydrogen permeation studies on Armco–iron and iron–molybdenum alloys is contained in *Jour. of Electrochem. Soc.*, vol. 112, no. 11, November 1965, p. 1067–1070, 1071–1073.
4. Inquiries concerning this innovation may be directed to:

   Office of Industrial Cooperation
   Argonne National Laboratory
   9700 South Cass Avenue
   Argonne, Illinois 60439
   Reference: B67-10499

Source: R. R. Heinrich, C. E. Johnson, and C. E. Crouthamel
Chemical Engineering Division
(ARG-10048)

Patent status:

Inquiries about obtaining rights for commercial use of this innovation may be made to:

Mr. George H. Lee, Chief
Chicago Patent Group
U.S. Atomic Energy Commission
Chicago Operations Office
9800 South Cass Avenue
Argonne, Illinois 60439

NASA TECH BRIEF

NASA Tech Briefs are issued to summarize specific innovations derived from the U.S. space program, to encourage their commercial application. Copies are available to the public at 15 cents each from the Clearinghouse for Federal Scientific and Technical Information, Springfield, Virginia 22151.

Composite Solar Cell Matrix Is Reliable, Lightweight and Flexible

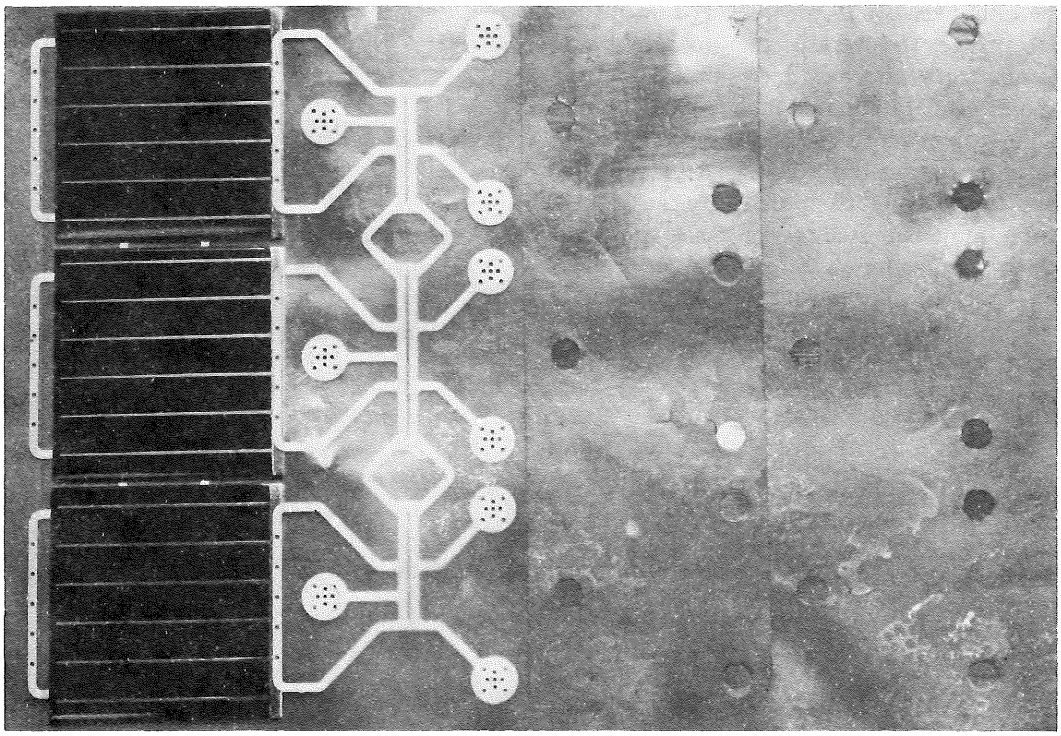

12-CELL MATRIX IN EARLY STAGE OF ASSEMBLY

The problem:

To devise a method for connecting, mechanically and electrically, individual solar cells to form a solar cell matrix. Previously, strips of metal of various configurations were used to connect cells into linear submodules and then into matrices. These strips, however, were difficult to solder and did not meet the requirements necessary for use with semiautomatic fabrication equipment.

The solution:

A novel configuration of conducting strips, which mechanically and electrically connect small individual solar cells into a linear array of cells, called a solar submodule, and then connect in series two or more submodules to form a solar cell matrix. The conducting strips, usually chemically etched out of a sheet of metal, are reliable, lightweight, and flexible under stress. Tiny perforations in the conducting strip at set

(continued overleaf)

This document was prepared under the sponsorship of the National Aeronautics and Space Administration. Neither the United States Government nor any person acting on behalf of the United States Government assumes any liability resulting from the use of the information contained in this document, or warrants that such use will be free from privately owned rights.

positions make it easy to solder them directly to the individual solar cells, eliminating the additional weight of mounting adhesives.

How it's done:

The composite solar cell matrix consists of individual solar cells, conducting strips, a board insulating panel, and an insulating board. The figure shows a 12-cell matrix in an early stage of assembly.

Each individual solar cell is soldered to the circular parts of the conducting strips, which are perforated to permit ease of fluxing and soldering. Three individual cells, soldered to one conducting strip, make up a submodule. Two very small segments of the conducting strip are visible between adjacent solar cells. Should the submodule be exposed to a flexing stress, it should flex at these points.

After soldering, the submodule is pasted with a silicone type adhesive to a 3-mil-thick H-film insulation sheet to protect the back of the solar cells and soldered joints from air, humidity, and corrosion. This fiberglass insulation panel has punched holes whose spacing conforms to the spacing of the circular parts of the conducting strips. These punched holes permit unsoldering of a defective solar cell. After the submodule is pasted to the panel, the panel is attached to an insulation board which protects the exposed parts of the conducting strips. Where the panels might be subjected to severe stress, a metal plate is placed below the insulation board, away from the solar cells.

A 12-cell matrix consists of 4 submodules in series, with each submodule consisting of 3 individual solar cells connected in parallel. A flexible lead is connected to each end of the matrix to complete the series connection.

To remove a defective solar cell, the bottom of each circular part of the particular conducting strip is heated while the solar cell is gently lifted, until separation is complete. Finally the horizontal perforated portion of the conducting strip is loosened by heating and the defective solar cell is removed. The removal of any individual solar cell does not affect adjacent or any other solar cells.

Notes:

1. Semiautomatic equipment can be used to solder the conducting strips to the solar cells. This feature should help generate interest in commercial applications.
2. Inquiries concerning this invention may be directed to:

   Technology Utilization Officer
   NASA Pasadena Office
   4800 Oak Grove Drive
   Pasadena, California 91103
   Reference: B67-10503

Patent status:

Inquiries about obtaining rights for the commercial use of this invention may be made to NASA, Code GP, Washington, D.C. 20546.

Source: R. K. Yasui
Jet Propulsion Laboratory
(NPO-10821)

NASA TECH BRIEF

NASA Tech Briefs are issued to summarize specific innovations derived from the U.S. space program, to encourage their commercial application. Copies are available to the public at 15 cents each from the Clearinghouse for Federal Scientific and Technical Information, Springfield, Virginia 22151.

Thin Film Thermal Detector

During investigations with thin dielectric films, it was discovered that an abnormally large variation of capacitance with temperature can be obtained in thin film capacitors when a fixed ionic space charge is present in sufficient density in the dielectric film. This effect was made the basis for a new kind of thin film thermal detector, whose performance at room temperature equals or exceeds that of comparable devices at much lower temperatures. The large temperature response (approximately 100 millivolts/°C), the low noise, and a structure that takes advantage of the thin film geometry to minimize thermal losses make possible a detectivity (figure of merit) for the device that approaches the theoretical maximum value at 300°K. The first experimental devices have detectivities falling within one order of magnitude of the limiting value and response times of approximately 50 milliseconds. The new thermal detector offers significant advantages as a temperature sensor in systems that use digital means for data handling and control. Present investigations are directed toward methods of optimizing the structure of the device and forming arrays that could be used in infrared imaging systems.

Note:

Inquiries concerning this device may be directed to:

Technology Utilization Officer
Jet Propulsion Laboratory
4800 Oak Grove Drive
Pasadena, California 91103
Reference: B67-10505

Patent status:

Inquiries about obtaining rights for the commercial use of this invention may be made to NASA, Code GP, Washington, D.C. 20546.

Source: Dr. Joseph Maserjian
(JPL-943)

Category 01

This document was prepared under the sponsorship of the National Aeronautics and Space Administration. Neither the United States Government nor any person acting on behalf of the United States Government assumes any liability resulting from the use of the information contained in this document, or warrants that such use will be free from privately owned rights.

NASA TECH BRIEF

NASA Tech Briefs are issued to summarize specific innovations derived from the U.S. space program, to encourage their commercial application. Copies are available to the public at 15 cents each from the Clearinghouse for Federal Scientific and Technical Information, Springfield, Virginia 22151.

Performance of Turbine-Type Flowmeters in Liquid Hydrogen

The problem:

Development of cryogenic technology has, in recent years, seen a marked increase in the use of large amounts of liquid hydrogen as a space vehicle propellant fuel and in laboratory use aimed at improving its utility in the space fuel area. Turbine-type flowmeters, because of ease of their installation and reliable operation, are generally used for measuring the flow of this liquid. However, there are few published reports of firsthand experience with volumetric turbine-type meters in such applications.

The solution:

Calibration testing involving 3/4-inch to 2-inch commercially available flowmeters operated in liquid hydrogen. The calibration factor (pulses per unit volume) below nominal full scale remains constant over only about one-sixth of the flow range obtained with water, although the factor is reproducible over much wider flow ranges. Nonreproducibility is such that the maximum deviation of the factor from its mean value at nominal full scale ranges from 0.5 to more than 1 percent, depending on the history of use; the probable deviation is one-half of the maximum deviation. A 50-percent probability exists that the calibration factor of a meter in liquid hydrogen at full scale can be predicted to within 0.7 percent from the water calibration. A 90-percent probability exists that the prediction can be made to within 1.0 percent if there are prior data on meters of the same design, and to within 1.5 percent if there are no such data; in the latter case, the calibration factor in liquid hydrogen must be assumed to be 0.5 percent higher than the calibration factor in water. The influence of piping conditions and of pressure drop are also taken into consideration.

Note:

Further information concerning this innovation is presented in NASA TN D-3770, "Performance of Turbine-Type Flowmeters in Liquid Hydrogen," by Herbert L. Minkin, Howard F. Hobart, and I. Warshawsky, December 1966, available from the Clearinghouse for Federal Scientific and Technical Information, Springfield, Virginia 22151. Inquiries may also be directed to:

Technology Utilization Officer
Lewis Research Center
21000 Brookpark Road
Cleveland, Ohio 44135
Reference: B67-10506

Patent status:

No patent action is contemplated by NASA.

Source: (LEW-10137)

Category 01

This document was prepared under the sponsorship of the National Aeronautics and Space Administration. Neither the United States Government nor any person acting on behalf of the United States Government assumes any liability resulting from the use of the information contained in this document, or warrants that such use will be free from privately owned rights.

NASA TECH BRIEF

NASA Tech Briefs are issued to summarize specific innovations derived from the U.S. space program, to encourage their commercial application. Copies are available to the public at 15 cents each from the Clearinghouse for Federal Scientific and Technical Information, Springfield, Virginia 22151.

Test and Inspection for Process Control of Monolithic Circuits

In the preparation and production of monolithic circuits, an effort was made to provide quality assurance procedures for the mass production of high reliability integrated circuits at a reasonable cost. Many of the controls suggested would be too stringent for engineering model shop work or for a small quantity prototype order, but these same controls provide a basis for a homogeneous process in moderate or mass production quantities.

A report has been prepared detailing the test and inspection procedures, which covers the following areas:

- Configuration Control
- Basic Fundamentals of Quality Control
- Control Charts
- Wafer Process Evaluation
- Process Evaluation
- Evaluation Score System
- Diffusion Evaluation
- Wafer Scribing
- Bonding Operation
- Test Controls

Copies of the report, *Test and Inspection for Process Control of Monolithic Circuits,* by Edward Spangenberg, et al, Westinghouse Electric Corporation, February 25, 1967, are available from:

Technology Utilization Officer
Marshall Space Flight Center
Huntsville, Alabama 35812
Reference: B67-10507

Patent status:

No patent action is contemplated by NASA.

Source: E. Spangenberg
of Westinghouse Electric Corporation
under contract to
Marshall Space Flight Center
(MFS-13084)

Category 01

This document was prepared under the sponsorship of the National Aeronautics and Space Administration. Neither the United States Government nor any person acting on behalf of the United States Government assumes any liability resulting from the use of the information contained in this document, or warrants that such use will be free from privately owned rights.

NASA TECH BRIEF

NASA Tech Briefs are issued to summarize specific innovations derived from the U.S. space program, to encourage their commercial application. Copies are available to the public at 15 cents each from the Clearinghouse for Federal Scientific and Technical Information, Springfield, Virginia 22151.

Improved Circuit for Measuring Capacitive and Inductive Reactances

The problem:

To devise a circuit for measuring very small changes of capacitive or inductive reactance, such as produced by a variable capacitance or a variable inductance displacement transducer. The circuit was specifically required to operate as the amplifying system for a displacement measuring seismograph which must be insensitive to changes in source impedance (a problem associated with dc seismograph amplifiers), or to Lenz Law effects exhibited by moving-coil seismographs. The output signal of the circuit should be of sufficient amplitude for use in telemetry or as an input to other circuits.

The solution:

An amplifier circuit employing reactance-sensing oscillators in which field effect transistors serve as the active elements.

How it's done:

The amplifier consists of four sections: (1) reactance-sensing oscillators, (2) a frequency doubler, (3) a sine-wave to square-wave converter, and (4) a phase detector.

The reactance-sensing oscillators are two synchronized Hartley-type oscillators using field effect transistors as the active elements. These oscillators shift phase with respect to each other whenever there is a small change in the reactance of their tuned circuits. Two ganged potentiometers adjust the amplitude of the synchronizing voltage between the two oscillators, and therefore adjust the sensitivity of the oscillators to reactance changes. The synchronizing voltage is taken from the untuned secondary of a feedback transformer to minimize unbalancing effects which are otherwise associated with each different gain setting of the sensitivity control.

The frequency doubling section serves two purposes. First, it gives a gain of two, since the phase shift of the second harmonic is exactly twice that of the fundamental. Secondly, it provides a convenient point in the circuit to introduce the 90° phase shift required by the phase detector. The phase of each doubler is adjusted 45° from that of its fundamental. The doubler in one channel is adjusted to lead its fundamental by 45°, and the other is adjusted to lag the fundamental by 45°. When both fundamentals are in phase, the second harmonics are 90° apart. This frequency doubling helps to overcome another serious limitation inherent in this circuit. By frequency doubling, the operational range (normally being ±90° from zero phase) in the fundamental is extended, because there is no danger of coming too close to the end points where oscillator synchronism is broken. The frequency doubler consists of a single rf-tuned transformer in the drain lead of each oscillator. This transformer also provides impedance matching between the oscillators and the squaring circuit.

The squaring circuit consists of two current-mode switching transistors which are biased at their switching point. A positive input will switch them on, and a negative input will switch them off. The output of the squarer is two constant-amplitude square waves whose phase is determined by the phase of the doubled fundamental of the sensing oscillators. The two square waves are then applied to the phase detector.

The phase detector has two distinct sections: (1) a pulse-duration generator and (2) an integrator. The pulse-duration generator is a *nand* gate. The two square waves from the squaring circuit are applied to the *nand* gate and produce a positive output whenever both square waves are negative. Since the doubling section provides a 90° phase shift, the output

(continued overleaf)

This document was prepared under the sponsorship of the National Aeronautics and Space Administration. Neither the United States Government nor any person acting on behalf of the United States Government assumes any liability resulting from the use of the information contained in this document, or warrants that such use will be free from privately owned rights.

pulse from the *nand* gate will be positive for 90° and off for 270°, whenever the fundamentals of the oscillators are in phase with each other. This output pulse duration is unique so long as the fundamental signals are not over ±45° of each other, i.e., ±90° of the applied signal. The variable-duration, constant-amplitude pulse is then applied to an operational amplifier-type of integrator. The output of the integrator is a dc voltage whose amplitude is determined by the duration of the input pulse applied to it. Since the duration of the input pulse is directly related to the phase of the fundamental signals of the oscillators, which are, in turn, determined by the reactance of the transducer used, the output of the integrator is a faithful reproduction of the position of the transducer.

Notes:

1. This circuit should have application wherever accurate measurements of small displacements must be made with transducers of the variable capacitance or variable inductance type.
2. Inquiries concerning this circuit may be directed to:

   Technology Utilization Officer
   Marshall Space Flight Center
   Huntsville, Alabama 35812
   Reference: B67-10513

Patent status:

Inquiries about obtaining rights for the commercial use of this invention may be made to NASA, Code GP, Washington, D.C. 20546.

Source: I. Dalins
of Marshall Space Flight Center
and V. McCarty
of University of Alabama
Research Institute
under contract to
Marshall Space Flight Center

(MFS-13083)

NASA TECH BRIEF

NASA Tech Briefs are issued to summarize specific innovations derived from the U.S. space program, to encourage their commercial application. Copies are available to the public at 15 cents each from the Clearinghouse for Federal Scientific and Technical Information, Springfield, Virginia 22151.

Apparatus Makes Klystron Operating Frequency Adjustable from Remote Point

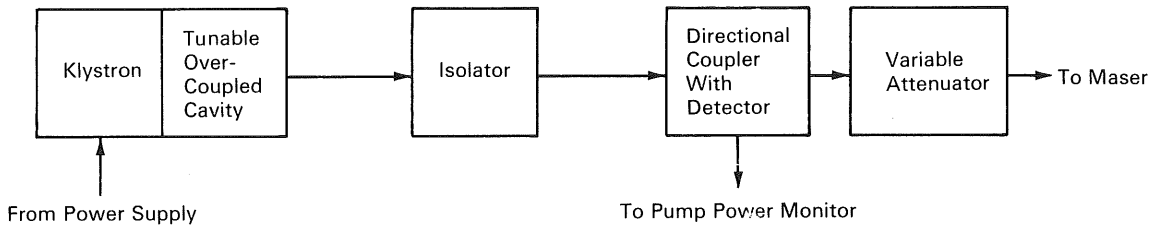

The problem:

In a communications receiver using a pump klystron for a traveling-wave maser, it was required that the klystron operate at two different frequencies. In order to accomplish the frequency change, it had been necessary to change or adjust the klystron mechanically. This mechanical adjustment was difficult to make and required partial dismantling of the unit.

The solution:

An apparatus incorporating a tunable overcoupled cavity with irises of appropriate size to accomplish frequency spread over the desired range and to maintain the Q of the klystron circuit at the optimum value. Proper frequency adjustment can be accomplished electrically from a remote point.

How it's done:

The dc voltage for the klystron reflector is obtained from an external power supply. The tunable overcoupled cavity allows a wide bandwidth. The isolator provides constant load, and the directional coupler enables monitoring of the output power to the variable attenuator. The latter sets the power applied to the maser. The klystron oscillation frequency depends on which direction (i.e., increasing or decreasing values) the reflector voltage is approached. The frequency is stable, however, for particular values of the reflector voltage.

Note:

Inquiries concerning this development may be directed to:

Technology Utilization Officer
NASA Pasadena Office
4800 Oak Grove Drive
Pasadena, California 91103
Reference: B67-10514

Patent status:

No patent action is contemplated by NASA.

Source: Robert C. Clauss
(NPO-09831)

Category 01

This document was prepared under the sponsorship of the National Aeronautics and Space Administration. Neither the United States Government nor any person acting on behalf of the United States Government assumes any liability resulting from the use of the information contained in this document, or warrants that such use will be free from privately owned rights.

NASA TECH BRIEF

NASA Tech Briefs are issued to summarize specific innovations derived from the U.S. space program, to encourage their commercial application. Copies are available to the public at 15 cents each from the Clearinghouse for Federal Scientific and Technical Information, Springfield, Virginia 22151.

Video Synchronization Processor Overcomes Poor Signal-to-Noise Ratio

The problem:

During adverse signal conditions caused by flame attenuation, antenna pattern nulls, and near-horizon tracking, the reception and synchronization of video data from space vehicles for ground station processing has been so difficult that much nonrepeatable data has been entirely lost.

The solution:

A video/sync processor that provides clean video sync regardless of the signal-to-noise quality of the reception.

How it's done:

The video/sync processor is designed to accept video data from an airborne television system and perform the various functions required for synchronization and data processing. The heart of the system is a second-order, phase-locked loop that compares the horizontal sync component of the incoming video to the horizontal sync component of a local sync generator, and thus locks the 31.5 kc voltage-controlled oscillator of the processor to the airborne video system's master oscillator. In this manner, all ground processing equipment is controlled by the airborne master oscillator.

Sync is stripped from the incoming video signal, and clean sync (free of noise) from the local sync generator is substituted. Therefore, so long as horizontal phase lock is maintained, all ground station recording and processing devices are presented video with clean sync regardless of the signal-to-noise ratio of the received signal. The system maintains sync lock far below the point where excessive noise would normally render the video useless.

Notes:

1. This invention should be useful in satellite data reduction, commercial television reception in normally unsatisfactory locales, and in any future aircraft-to-ground applications.
2. Inquiries concerning this invention may be directed to:

   Technology Utilization Officer
   Kennedy Space Center
   Kennedy Space Center, Florida 32899
   Reference: B67-10515

Patent status:

Inquiries about obtaining rights for the commercial use of this invention may be made to NASA, Code GP, Washington, D.C. 20546.

Source: Darrow L. Webb
(KSC-10002)

Category 01

This document was prepared under the sponsorship of the National Aeronautics and Space Administration. Neither the United States Government nor any person acting on behalf of the United States Government assumes any liability resulting from the use of the information contained in this document, or warrants that such use will be free from privately owned rights.

NASA TECH BRIEF

NASA Tech Briefs are issued to summarize specific innovations derived from the U.S. space program, to encourage their commercial application. Copies are available to the public at 15 cents each from the Clearinghouse for Federal Scientific and Technical Information, Springfield, Virginia 22151.

Cone and Column Solar Energy Concentrator

The problem:

To design a large, lightweight solar energy concentrator. Large paraboloidal solar concentrators are difficult to fabricate accurately.

The solution:

The use of an optically folded system that consists of a large aluminized plastic film cone with a ring supporting the rim of the cone. A secondary reflective surface is a stepped parabolic column located along the axis of the cone.

How it's done:

This solar concentrator concept is a compound reflector system consisting of a reflective membrane cone and a stepped parabolic column located along the optical axis of the cone. Solar energy is reflected from the cone to the column, back to the cone, and then to the focal point. The membrane cone can be folded for packaging and is supported by an expandable ring at the rim of the cone when erected. The stepped parabolic column can be telescoped for packaging.

Note:

Further information concerning this invention is presented in NASA CR-52845, "Investigation of the Optical Characteristics of the Cone-and-Column Double Reflector Solar Concentrator," by J. W. Haylett, November 1963. Inquiries may also be directed to:

Technology Utilization Officer
Langley Research Center
Langley Station
Hampton, Virginia 23365
Reference: B67-10517

Patent status:

This invention has been patented by NASA (U.S. Patent No. 3295512), and royalty-free license rights will be granted for its commercial development. Inquiries about obtaining a license should be addressed to NASA, Code GP, Washington, D.C. 20546.

Source: Thomas J. McCusker
of Goodyear Aerosapce Corporation
under contract to
Langley Research Center
(LaRC-210)

Category 01

This document was prepared under the sponsorship of the National Aeronautics and Space Administration. Neither the United States Government nor any person acting on behalf of the United States Government assumes any liability resulting from the use of the information contained in this document, or warrants that such use will be free from privately owned rights.

NASA TECH BRIEF

NASA Tech Briefs are issued to summarize specific innovations derived from the U.S. space program, to encourage their commercial application. Copies are available to the public at 15 cents each from the Clearinghouse for Federal Scientific and Technical Information, Springfield, Virginia 22151.

Circuit Measures Hysteresis Loop Areas at 30 Hz

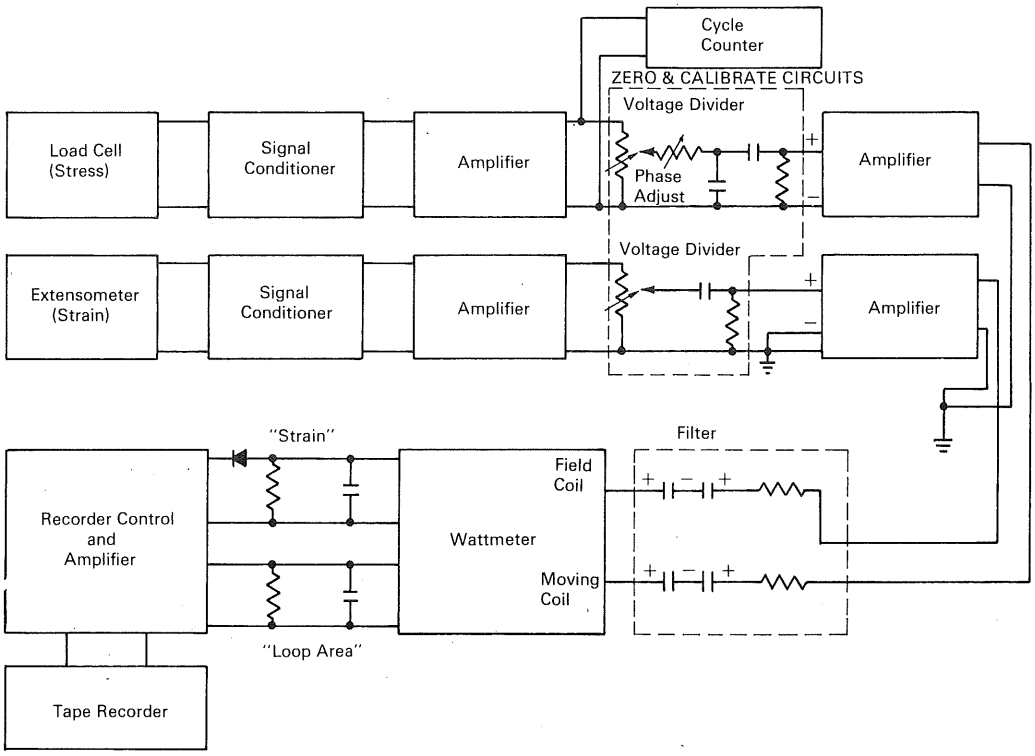

The problem:

To devise instrumentation that will measure hysteresis loop areas as a function of time during fatigue testing of specimens subjected to sinusoidal tension–compression stresses at a frequency of 30 Hz. An X–Y plotter, which is generally used to measure hysteresis loop areas, does not have the frequency response necessary to follow loops at 30 Hz.

The solution:

An analog circuit based on the analytically derived fact that when the sinusoidal stress signal (shifted by 90 degrees) is multiplied by the strain signal, the dc signal component in the product is proportional to the hysteresis loop area.

How it's done:

A wattmeter is used to multiply the stress and strain signals. An amplifier in series with another amplifier is used between the bridge signal conditioner and the wattmeter to increase the stress signal to a level acceptable to the wattmeter. Two amplifiers are used in a similar manner to amplify the strain signal.

The signal representing hysteresis loop area is fed into a 2-channel tape recorder through a recorder

(continued overleaf)

This document was prepared under the sponsorship of the National Aeronautics and Space Administration. Neither the United States Government nor any person acting on behalf of the United States Government assumes any liability resulting from the use of the information contained in this document, or warrants that such use will be free from privately owned rights.

control and amplifier unit. The recording is a continuous plot of hysteresis loop area versus time. A plot of strain amplitude versus time is also recorded.

The wattmeter reads zero when its input consists of two sinusoids that differ in phase by 90 degrees. It is therefore necessary, after scaling by means of the voltage dividers (in the zero and calibrate circuits), to use the "phase adjust" resistor to shift one of two reference sinusoids from an oscillator until the wattmeter reads zero. Two sinusoidal signals which differ in phase by a known amount, and of measured amplitude, are fed into the wattmeter to provide a calibration signal. This signal is also recorded on the tape.

Notes:

1. The wattmeter can be replaced by Hall Effect multipliers at a considerable reduction in cost.
2. Details concerning this innovation are given in Report No. 67-101, "Final Report of Experimental Studies of Cumulative Damage," March 1967, prepared by Midwest Applied Science Corporation. This report may be obtained from:

   Technology Utilization Officer
   Marshall Space Flight Center
   Huntsville, Alabama 35812
   Reference: B67-10519

Patent status:

No patent action is contemplated by NASA.

Source: C. Hoffman and D. Spilo
of Midwest Applied Science Corporation
under contract to
Marshall Space Flight Center
(MFS-13069)

NASA TECH BRIEF

NASA Tech Briefs are issued to summarize specific innovations derived from the U.S. space program, to encourage their commercial application. Copies are available to the public at 15 cents each from the Clearinghouse for Federal Scientific and Technical Information, Springfield, Virginia 22151.

Flame Sprayed Dielectric Coatings Improve Heat Dissipation in Electronic Packaging

The problem:

Present electronic packaging applications require the transfer and dissipation of heat from heat-generating components while maintaining the components electrically isolated. The usual approach is to mount the components to an aluminum heat sink which has been coated with an electrically insulating material. The use of an anodized (aluminum oxide) coating has been found to be inadequate because of its low electrical resistance when exposed to a high humidity environment.

The solution:

Flame spray the heat sinks with coatings of alumina (Al_2O_3) or beryllia (BeO) and then finish off with an organic sealer.

How it's done:

Beryllia (BeO), and alumina (Al_2O_3) were examined for possible application as heat sink coatings. Magnesia was eliminated from consideration because it was found to be very hygroscopic. The materials applied to aluminum test panels for examination were high purity 325 mesh alumina and 200 mesh beryllium oxide. A controlled atmosphere chamber was used for the flame spraying of beryllia since it is a toxic material.

After the oxide coatings were flame sprayed onto the test panels, organic heat sealers were brushed on the coatings to inhibit moisture from penetrating into the pores of the coating. Three sealers were tested: an epoxy resin, an insulating varnish, and a phenolic sealer. The coatings exhibited the best shock resistance with the epoxy resin sealer.

Notes:

1. Flame sprayed alumina and beryllia coatings with an organic sealer brushed over them can be used from room temperature to 400°F. They have electrical resistivities of approximately 10^{15} ohm-cm at room temperature to 10^{12} ohm-cm at 400°F with no dielectric breakdown at 500 volts. The thermal conductivity of alumina is about one-sixth of that for beryllia. Both coatings (with the epoxy sealer) withstood a thermal cycle test from 400°F to −85°F with a transition period of approximately three minutes.
2. Inquiries concerning this invention may be directed to:

   Technology Utilization Officer
   Marshall Space Flight Center
   Huntsville, Alabama 35812
   Reference: B67-10534

Patent status:

Inquiries about obtaining rights for the commercial use of this invention may be made to NASA, Code GP, Washington, D.C. 20546.

Source: T. L. Mackay, J. B. Vanaman, and A. N. Muller
of Douglas Aircraft Co.
under contract to
Marshall Space Flight Center
(MFS-13569)

Category 01

This document was prepared under the sponsorship of the National Aeronautics and Space Administration. Neither the United States Government nor any person acting on behalf of the United States Government assumes any liability resulting from the use of the information contained in this document, or warrants that such use will be free from privately owned rights.

NASA TECH BRIEF

NASA Tech Briefs are issued to summarize specific innovations derived from the U.S. space program, to encourage their commercial application. Copies are available to the public at 15 cents each from the Clearinghouse for Federal Scientific and Technical Information, Springfield, Virginia 22151.

Eutectic Fuse Provides Current and Thermal Protection under High Vibration

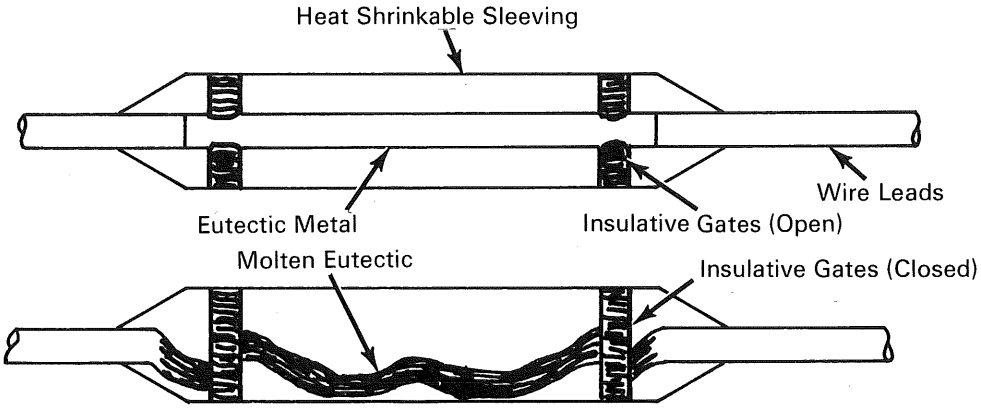

The problem:

To develop a fuse that will provide current and thermal protection to an electronic system and maintain this protection under high vibration environments. Presently used circuit breakers and fuses do not afford adequate protection in high vibration environments.

The solution:

The use of eutectic fuses, embedded within heat shrinkable sleeving to provide positive closing action under the conditions of high current or temperature.

How it's done:

The protection device consists of a heat shrinkable body with leads on both ends. Inside the body is a eutectic wire completing the circuit between the two leads. At either end of the body are heat shrinkable insulative gates which fit over narrowed sections of the eutectic wire.

During conditions of high current or external heat, the body and gates will shrink, closing off the path of the current as the eutectic wire melts. In the closed configuration, the gates form two completely insulative obstacles in the path of the current. Since the eutectic material is completely separated in three sealed chambers, the probability of forming a conducting path is further decreased and the configuration can withstand extreme vibration environments without the possibility of completion of the circuit.

Note:

Inquiries concerning this invention may be directed to:

Technology Utilization Officer
Marshall Space Flight Center
Huntsville, Alabama 35812
Reference: B67-10535

Patent status:

No patent action is contemplated by NASA.

Source: N. Ierokomos
of North American Aviation, Inc.
under contract to
Marshall Space Flight Center
(MFS-13664)
Category 01

This document was prepared under the sponsorship of the National Aeronautics and Space Administration. Neither the United States Government nor any person acting on behalf of the United States Government assumes any liability resulting from the use of the information contained in this document, or warrants that such use will be free from privately owned rights.

AEC-NASA TECH BRIEF

AEC-NASA Tech Briefs describe innovations resulting from the research and development program of the U.S. AEC or from AEC-NASA interagency efforts. They are issued to encourage commercial application. Tech Briefs are published by NASA and may be purchased, at 15 cents each, from the Clearinghouse for Federal Scientific and Technical Information, Springfield, Virginia 22151.

Double Copper Sheath Multiconductor Instrumentation Cable Is Durable and Easily Installed in High Thermal or Nuclear Radiation Area

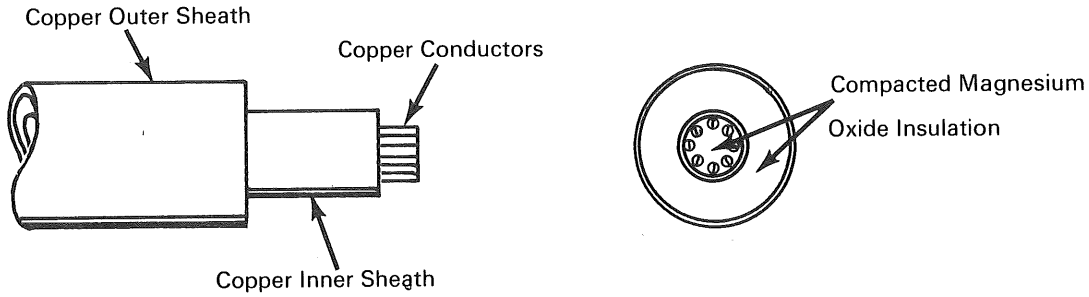

The problem:

It was required to provide a double sheathed multiconductor instrumentation cable in a moist, vibratory, and hazardous environment in lengths up to 100 ft. These cables were to be integrally connected to transducers mounted on the test piece, and operate at optimum efficiency unattended for 1 year or more. In addition, it was a requirement that grounding connections be made at one end of the cable because accidental grounding along the length was prohibited. No commercially available double sheathed, multiconductor cables existed that would satisfy these requirements.

The solution:

A cable in which the conducting wires are routed through two concentric copper tube sheaths, employing a compressed insulator between the conductors and between the inner and outer sheaths.

How it's done:

Copper wire conductors are threaded through preformed magnesium oxide beads which in turn are placed inside a copper sheath of the appropriate diameter and length. This assembly is then drawn or swaged to compress the magnesium oxide. It is then annealed to relieve any work hardening that might have occurred. The assembly is then placed inside a larger diameter copper tube and additional preformed magnesium oxide beads are placed between the tubes. The drawing, swaging, and annealing process is then repeated to produce the finished product. The inner sheath becomes the grounding conductor at the preselected end, and the outer sheath acts as a durable protective barrier against moisture, abrasion, and vibration.

Notes:

1. The double sheath construction acts as an instrumentation noise barrier and virtually eliminates "ground loop".
2. The selection of copper makes installation (bending) easier and overall costs are reduced as compared to stainless steel or other conventional materials. Magnesium oxide was the selected insulator because of its superior electrical characteristics at high temperatures.

(continued overleaf)

This document was prepared under the sponsorship of the Atomic Energy Commission and/or the National Aeronautics and Space Administration. Neither the United States Government nor any person acting on behalf of the United States Government assumes any liability resulting from the use of the information contained in this document, or warrants that the use of any information, apparatus, method, or process disclosed in this document may not infringe privately owned rights.

3. Inquiries concerning this innovation may be directed to:

Technology Utilization Officer
AEC–NASA Space Nuclear
Propulsion Office
U.S. Atomic Energy Commission
Washington, D.C. 20545
Reference: B67-10538

Patent status:

No patent action is contemplated by AEC or NASA.

Source: A. W. McCrae, Jr.
of Aerojet-General Corp.
under contract to
AEC–NASA Space Nuclear Propulsion Office
(NUC-10007)

AEC-NASA TECH BRIEF

AEC-NASA Tech Briefs describe innovations resulting from the research and development program of the U.S. AEC or from AEC-NASA interagency efforts. They are issued to encourage commercial application. Tech Briefs are published by NASA and may be purchased, at 15 cents each, from the Clearinghouse for Federal Scientific and Technical Information, Springfield, Virginia 22151.

Automatic Transducer Switching Provides Accurate Wide Range Measurement of Pressure Differential

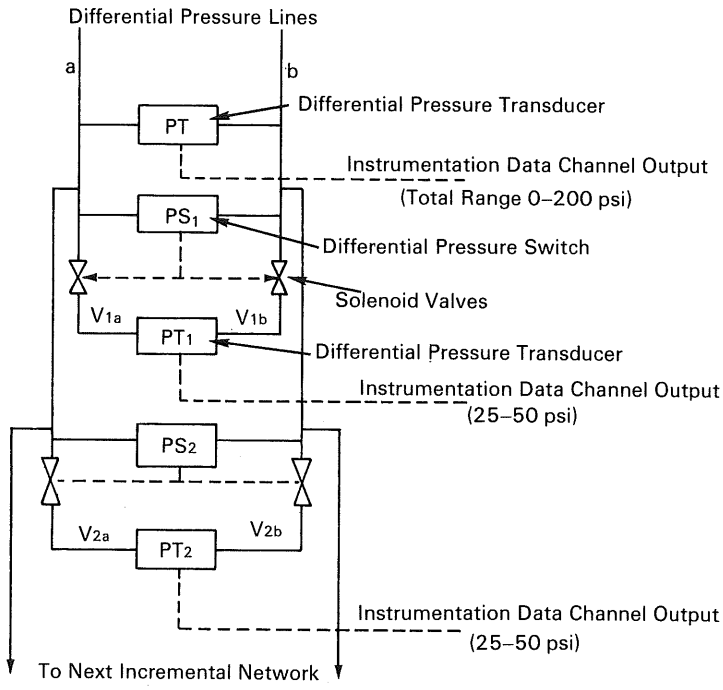

The problem:

To measure differential gas pressure over a wide range (0–200 psi) but with great accuracy at any point in the scale. High precision transducers usually are limited in the range of measurement and can be easily damaged if the pressure limits are exceeded.

The solution:

An automatic pressure transducer switching network which sequentially selects any one of a number of limited-range transducers as the pressure rises or falls.

How it's done:

In operation, where no differential pressure exists across lines a and b, the two normally open solenoid valves V_{1a} and V_{1b} are open. As the a–b differential pressure rises, it is measured by transducer PT_1 (shown as 0–25 psi) until the 25 psi limit is reached. At this point, as detected by pressure switch PS_1, PS_1 closes valves V_{1a} and V_{1b} to prevent further gas flow to PT_1. The pressure is still applied to the next ramp (PS_2, V_{2a}, V_{2b}, and PT_2) which is set for the 25–50 psi range. Additional networks are added to the

(continued overleaf)

This document was prepared under the sponsorship of the Atomic Energy Commission and/or the National Aeronautics and Space Administration. Neither the United States Government nor any person acting on behalf of the United States Government assumes any liability resulting from the use of the information contained in this document, or warrants that the use of any information, apparatus, method, or process disclosed in this document may not infringe privately owned rights.

system to complete the total incremental coverage. Transducer PT provides full range, but less accurate, monitoring of the pressure activity.

Notes:

1. The 0–200 psi range and 25 psi incremental steps were selected only for discussion purposes. Greater ranges and more or less precise incremental steps are entirely feasible.
2. Inquiries concerning this innovation may be directed to:

   Technology Utilization Officer
   AEC–NASA Space Nuclear
   Propulsion Office
   U.S. Atomic Energy Commission
   Washington, D.C. 20545
   Reference: B67-10540

Patent status:

No patent action is contemplated by AEC or NASA.

Source: S. K. Yoder
of Aerojet-General Corp.
under contract to
AEC–NASA Space Nuclear Propulsion Office
(NUC-10001)

NASA TECH BRIEF

NASA Tech Briefs are issued to summarize specific innovations derived from the U.S. space program, to encourage their commercial application. Copies are available to the public at 15 cents each from the Clearinghouse for Federal Scientific and Technical Information, Springfield, Virginia 22151.

Analog Buffer Isolates High Impedance Source from Low Impedance Load

The problem:

Although there are many buffer amplifier circuits available commercially, a requirement has arisen that they do not satisfy. The requirement is for near complete isolation of a high impedance source from a low impedance load with temperature stability, linearity, and gain parameters not generally available in state-of-the-art circuitry.

The solution:

An analog buffer amplifier that essentially isolates source from load through an impedance ratio of approximately 200 million to one.

How it's done:

The problem of current gain (approximately 1%/°C) for small values of Ic is handled by having the Ic of the input stage held to a low level (approximately 450 nanoamps). The current is also held constant by the constant current source. The relative error introduced by current gain changes in this circuit is very small. The most significant source of error is the Delta Vbe/Delta T of the input stage transistor which is specified at 10 microvolts/°C differential voltage for the pair. This voltage is not compensated for and the differential voltage appears at the output as error. The high input impedance requirements of the buffer circuit, when used as an amplifier in the filter system, dictated the use of cascaded input stage transistors. With this configuration, the theoretical and actual input impedance is approximately 40 megohms. Resistor changes increase this value to approximately 80 megohms. The final configuration of the buffer circuit has been breadboarded, and bench and environmental tests conducted. Drift checks were made during three test runs. For each test run all active elements in the circuit were replaced with a new set. Each set of active elements was then tested three times at 50°F and 100°F. The mean average drift for nine tests with three sets of active elements was ±100 microvolts with the greatest recorded error being 200 microvolts. The testing was conducted in this manner to reduce the possibility of having a set of active elements that favored each other in producing a low drift characteristic. The output impedance was measured and found to be less than 0.2 ohm.

The linearity tests on the circuit were conducted in the same manner as the drift tests. That is, the active elements were changed for each test run and then several tests were conducted on each set of elements. The worst linearity deviation was 208 microvolts while the average for all tests was 131 microvolts; well within design specifications.

Notes:

1. This buffer amplifier exhibited the following characteristics:
   a. Temperature stability for 45°C change from ambient—0.004%
   b. Linearity from 0.0 to 5.0 volts—0.005%
   c. Gain—0.9984
2. Inquiries concerning this invention may be directed to:

   Technology Utilization Officer
   Marshall Space Flight Center
   Huntsville, Alabama 35812
   Reference: B67-10544

Patent status:

Inquiries about obtaining rights for the commercial use of this invention may be made to NASA, Code GP, Washington, D.C. 20546.

Source: William A. Denny
of Douglas Aircraft Company
under contract to
Marshall Space Flight Center
(MFS-13481)
Category 01

This document was prepared under the sponsorship of the National Aeronautics and Space Administration. Neither the United States Government nor any person acting on behalf of the United States Government assumes any liability resulting from the use of the information contained in this document, or warrants that such use will be free from privately owned rights.

NASA TECH BRIEF

NASA Tech Briefs are issued to summarize specific innovations derived from the U.S. space program, to encourage their commercial application. Copies are available to the public at 15 cents each from the Clearinghouse for Federal Scientific and Technical Information, Springfield, Virginia 22151.

Instrumentation Monitors Transported Material Through Variety of Parameters

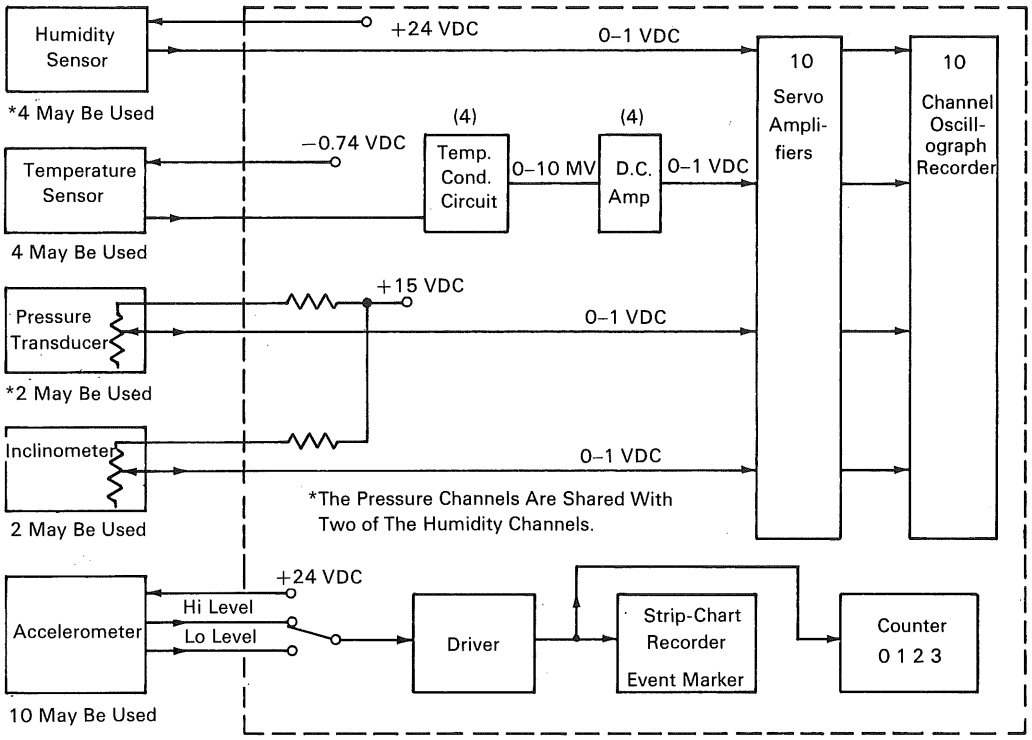

All Equipment Within Dotted Line Is Housed In One Container

The problem:

In transporting sensitive or delicate equipment, it is desirable to have a record of the environmental parameters such as temperature, pressure, humidity, shock, and acceleration to which the equipment is exposed. Prior methods have used instrumentation and materials (such as desiccant that changes color with humidity change) that are not related to time but rather to maximum and minimum limits.

The solution:

A transport instrumentation system that measures all parameters of interest and records them constantly in time reference. The system provides a complete historical record plus the capability of taking corrective action where indicated by real time readout.

How it's done:

Two recorders provide output indications from a system of sensing elements such as accelerometers, temperature sensors, humidity sensors, pressure transducers, and inclinometers. A single housing contains the two recorders: one, a 10-channel analog device of the pen-oscillograph type uses servo balanced bridges to record temperature, humidity, pressure, and inclination; the other, a 10-channel digital records

(continued overleaf)

This document was prepared under the sponsorship of the National Aeronautics and Space Administration. Neither the United States Government nor any person acting on behalf of the United States Government assumes any liability resulting from the use of the information contained in this document, or warrants that such use will be free from privately owned rights.

accelerations or impacts that exceed specified limits. The sensors are relatively standard, commercially available items that, combined with the recorders, provide a system with overall accuracies in the order of ±3% depending on the frequency and exactness of calibration procedures.

Notes:

1. The value of the system lies in its broad coverage of environmental parameters recorded in real time with a time reference for use in analysis of changing conditions.
2. Inquiries concerning this innovation may be directed to:

   Technology Utilization Officer
   Marshall Space Flight Center
   Huntsville, Alabama 35812
   Reference: B67-10545

Patent status:

No patent action is contemplated by NASA.

Source: H. S. Hanson
of North American Aviation, Inc.
under contract to
Marshall Space Flight Center
(MFS-12938)

NASA TECH BRIEF

NASA Tech Briefs are issued to summarize specific innovations derived from the U.S. space program, to encourage their commercial application. Copies are available to the public at 15 cents each from the Clearinghouse for Federal Scientific and Technical Information, Springfield, Virginia 22151.

Development of Low Temperature Battery

The problem:

To develop a low temperature battery capable of operating for at least 72 hours within a discharge temperature range of +20°C to −90°C.

The solution:

A self-contained battery system consisting of a magnesium anode, potassium thiocyanate–ammonia electrolyte and a cathode composed of a mixture of sulfur, carbon, and mercuric sulfate ($Mg/KSCN:NH_3/HgSO_4:S:C$).

Notes:

1. Research and development on a ($Mg/KSCN:NH_3/HgSO_4:S:C$) low temperature battery system has thus far produced a cell with a maximum life of 117 hours obtainable at −90°C. The cell is capable of delivering 1.5 watts for 6 minutes and 0.3 watt for 54 minutes each hour. Continued research on this battery system should lead to further improvements in its performance.
2. Additional details are contained in the following reports:
   (a) NASA CR-54970, *First Quarterly Report—Low Temperature Battery,* by G. M. Armstrong, December 14, 1965 to March 13, 1966.
   (b) NASA CR-72173, *Second and Third Quarterly Reports (combined)—Low Temperature Battery,* by G. M. Armstrong, March 14, 1966 to September 13, 1966.

   Copies of these reports are available from:
   Technology Utilization Officer
   Lewis Research Center
   21000 Brookpark Road
   Cleveland, Ohio 44135
   Reference: B67-10546

Patent status:

Inquiries about obtaining rights for the commercial use of this invention may be made to NASA, Code GP, Washington, D.C. 20546.

Source: George M. Armstrong
of Livingston Electronic Corporation
under contract to
Lewis Research Center
(LEW-10326)

Category 01

This document was prepared under the sponsorship of the National Aeronautics and Space Administration. Neither the United States Government nor any person acting on behalf of the United States Government assumes any liability resulting from the use of the information contained in this document, or warrants that such use will be free from privately owned rights.

NASA TECH BRIEF

NASA Tech Briefs are issued to summarize specific innovations derived from the U.S. space program, to encourage their commercial application. Copies are available to the public at 15 cents each from the Clearinghouse for Federal Scientific and Technical Information, Springfield, Virginia 22151.

GMT/Local-Time Conversion Chart

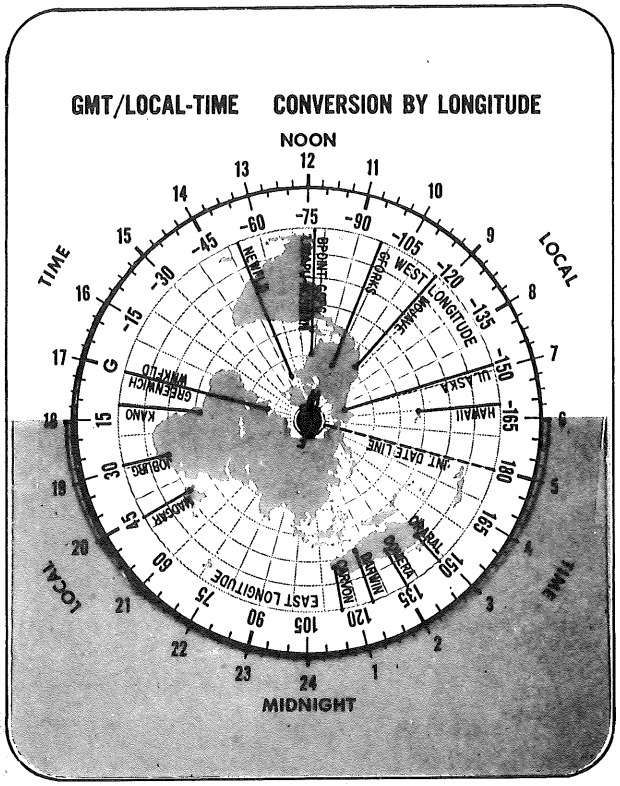

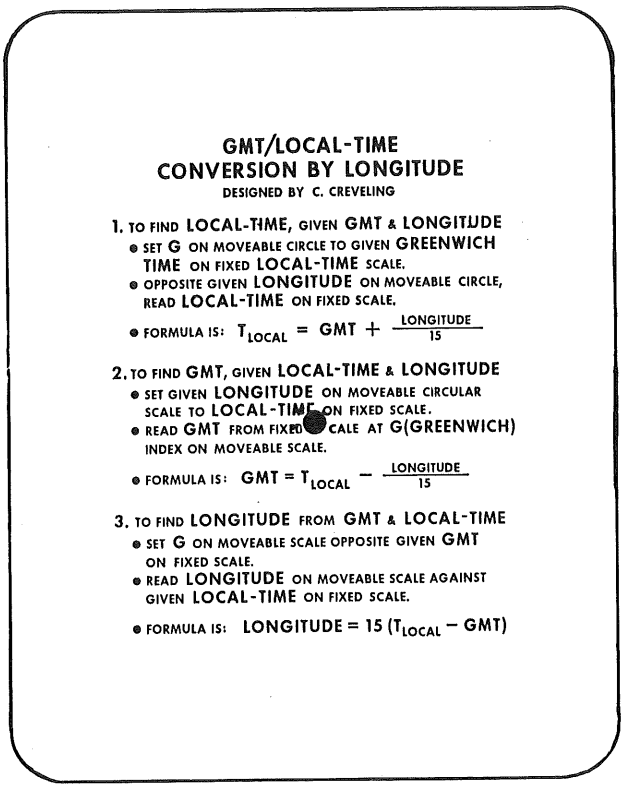

The problem:

In the calculation of local time, Greenwich Mean Time (GMT), and location by degree of longitude, navigators in the past have had to determine two of the factors in order to ascertain the third. While this is done in a straightforward manner, using relatively simple formulae, it consumes appreciable time and is inconvenient in the case of fast-moving transportation media where the operator of the transport must interrupt his normal operational routines.

The solution:

A GMT/local-time conversion by longitude pocket instrument that automatically indicates the desired information by simply manipulating the moveable portion of the instrument in accordance with a set of simple instructions imprinted on the instrument's reverse side.

(continued overleaf)

This document was prepared under the sponsorship of the National Aeronautics and Space Administration. Neither the United States Government nor any person acting on behalf of the United States Government assumes any liability resulting from the use of the information contained in this document, or warrants that such use will be free from privately owned rights.

Notes:

1. While this device has been designed to aid NASA personnel in quick-look evaluation of a given satellite's reported position in relation to the STADAN (Satellite Tracking and Data Acquisition Network) stations, its polar projection map makes it an ideal tool for instructing students in the time/longitude relationship of easily identified terrestrial points and areas.
2. The device should be useful to operators of high-speed aircraft which must respect and avoid international boundaries.
3. Inquiries concerning this invention may be directed to:

   Technology Utilization Officer
   Goddard Space Flight Center
   Greenbelt, Maryland 20771
   Reference: B67-10548

Patent status:

Inquiries about obtaining rights for the commercial use of this invention may be made to NASA, Code GP, Washington, D. C. 20546.

Source: Cyrus J. Creveling
(GSC-10521)

NASA TECH BRIEF

NASA Tech Briefs are issued to summarize specific innovations derived from the U.S. space program, to encourage their commercial application. Copies are available to the public at 15 cents each from the Clearinghouse for Federal Scientific and Technical Information, Springfield, Virginia 22151.

High-Temperature (1100°F) Capacitors Operate without Supplemental Cooling

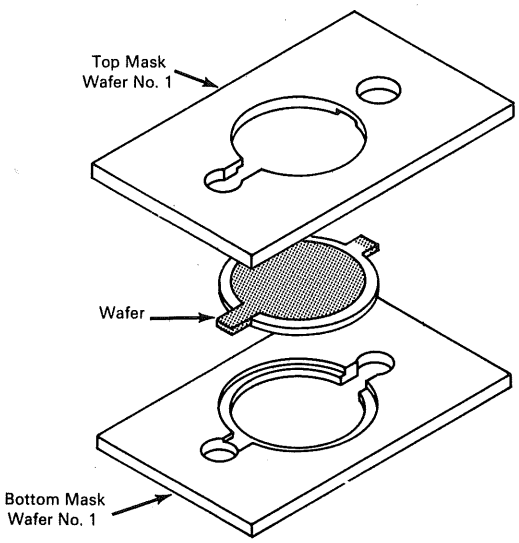

MASKS USED FOR SPUTTERING ELECTRODES ON TABBED WAFERS

FIGURE I

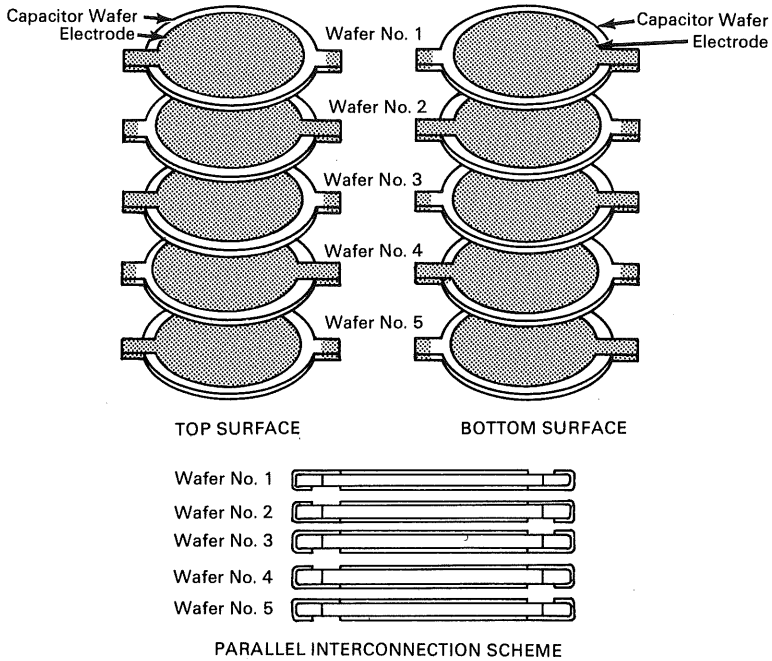

PARALLEL INTERCONNECTION SCHEME

FIGURE 2

The problem:

To fabricate high-temperature capacitors which are compact, lightweight, and suitable for operation in a 800° to 1100°F temperature range without supplemental cooling.

The solution:

A multilayered capacitor fabricated with one-mil thick pyrolytic boron nitride and "wrap around" sputtered electrodes to achieve parallel electrical interconnections in a stacked configuration of 3 to 9 wafers.

How it's done:

Practically all fixed capacitors manufactured commercially (other than electrolytic types) are constructed by one of two general methods, stacking or rolling. The stacked approach was selected because of the characteristic brittleness of high-temperature dielectric materials.

The capacitor is fabricated as follows:

1. A one-inch square wafer of pyrolytic-boron nitride is sliced and lapped to a thickness of 1.0 mil.

(continued overleaf)

This document was prepared under the sponsorship of the National Aeronautics and Space Administration. Neither the United States Government nor any person acting on behalf of the United States Government assumes any liability resulting from the use of the information contained in this document, or warrants that such use will be free from privately owned rights.

2. High purity platinum is sputtered on the pyrolytic boron nitride wafers. The electrodes are sputtered on both sides of the wafer at the same time to provide electrical continuity from the top and bottom electrodes around to the opposite side of each tab. Figure 1 shows a tabbed wafer positioned between the two masks. Proper mask to wafer registration is achieved by providing a countersunk depression in one of the masks conforming to the wafer outline. Coincident holes are drilled in the top and bottom masks to insure mask-to-mask registration.
3. The sputtered electrodes applied to each wafer are then connected so that the top electrode of wafer No. 1 is electrically connected to the bottom electrode of wafer No. 2. The bottom and top electrodes of wafers No. 1 and No. 2, respectively, are directly opposite each other and would normally come in contact. This interconnection arrangement is shown in Figure 2 for a five-wafer stack. The capacitance of each wafer is in parallel and additive; therefore, in a five-wafer stack, the total capacitance of the stack will be five times the capacitance of each wafer.

   Figure 2 shows the wafers with tabs extending from opposite edges. These tabs will be made an integral part of the dielectric and their function is to extend each electrode from one side of a wafer to the other side. If the wafers are stacked as shown, the electrodes on each wafer will automatically connect in parallel when the stack is compressed. A 100-layer stack, for example, using one-mil thick wafers would have a compressed thickness only slightly in excess of 0.1 inch since the electrode thickness is negligible.

Notes:

1. The capacitors were tested in vacuum for electrical data (capacitance, dissipation factor, dc resistance) over the temperature range from room temperature to 1100°F. Measured values for this capacitor with a one-mil thick dielectric were:
   (a) Capacitance change from room temperature to 1100°F: 1.5%.
   (b) Dissipation factor at 1100°F: 0.009 (1kc/sec).
   (c) DC electric strength: room temperature—10,000 volts/mil; 1100°F—7,000 volts/mil.

   These test data indicated that the performance objectives for this capacitor could be exceeded by a substantial margin.
2. Inquiries concerning this invention may be directed to:

   Technology Utilization Officer
   Lewis Research Center
   21000 Brookpark Road
   Cleveland, Ohio 44135
   Reference: B67-10550

Patent status:

No patent action is contemplated by NASA.

Source: R. E. Stapleton
of Westinghouse Electric Corporation
under contract to
Lewis Research Center
(LEW-10324)

NASA TECH BRIEF

NASA Tech Briefs are issued to summarize specific innovations derived from the U.S. space program, to encourage their commercial application. Copies are available to the public at 15 cents each from the Clearinghouse for Federal Scientific and Technical Information, Springfield, Virginia 22151.

Light-Controlled Resistors Provide Quadrature Signal Rejection for High-Gain Servo Systems

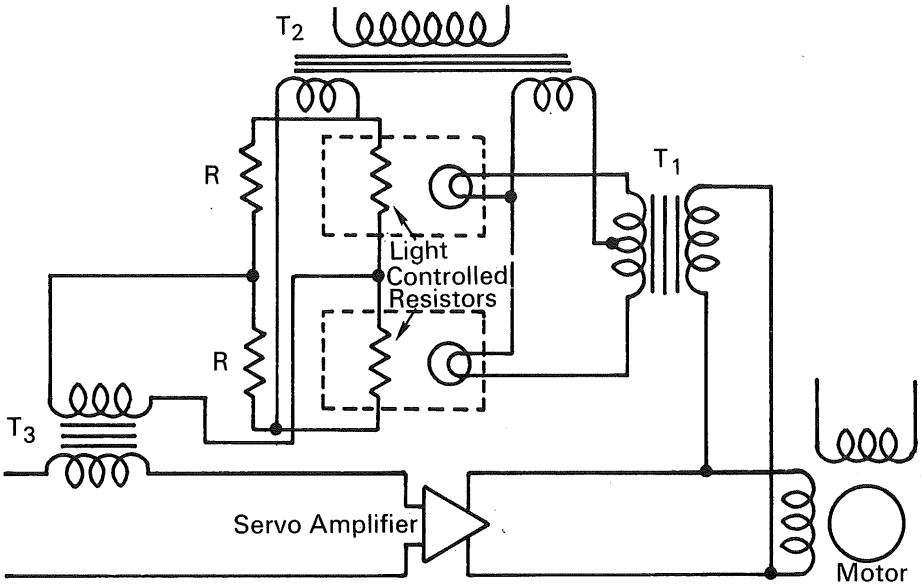

The problem:

To develop a simple, reliable servo amplifier feedback circuit to reduce the quadrature components at the output of a high-gain servo system. Quadrature signal components may cause overheating of the servo motor, and thus they must be eliminated before passing through the final servo amplifier.

The solution:

A servo amplifier feedback system, in which the phase sensitive detection, low pass filtering, and multiplication functions required for quadrature rejection, are performed by light-controlled photoresistors.

How it's done:

The voltage applied to the servo motor is also applied to the transformer T_1, and is added vectorially to the output of T_2 in a bridge circuit. Any quadrature signal component existing in the motor drive voltage causes an unbalance in the light-controlled resistor bridge circuit. When the quadrature voltage is zero, the respective voltages to the lamps in the light-controlled resistors are equal and both the light-controlled resistor bridge and resistor bridge are balanced.

When a quadrature component does exist in the servo loop, the vector relationships produce unequal magnitudes of voltages to the lamps, and the light-controlled resistor bridge becomes unbalanced. This unbalance causes a corresponding unbalance in the resistor bridge and applies a quadrature voltage to the transformer T_3. Transformer T_3 is connected so that the quadrature voltage applied to the error volt-

(continued overleaf)

This document was prepared under the sponsorship of the National Aeronautics and Space Administration. Neither the United States Government nor any person acting on behalf of the United States Government assumes any liability resulting from the use of the information contained in this document, or warrants that such use will be free from privately owned rights.

age is in opposite phase with respect to the quadrature component of the error signal, and they therefore cancel each other.

Notes:

1. This quadrature rejection circuit provides other advantages in addition to the reduction in the complex circuitry normally required for high-gain servo feedback systems. These advantages are: increased gain, improvement of signal-to-noise ratio, and elimination of necessity for compensation.
2. Inquiries concerning this innovation may be directed to:

   Technology Utilization Officer
   Western Support Office
   150 Pico Boulevard
   Santa Monica, California 90406
   Reference: B67-10552

Patent status:

No patent action is contemplated by NASA.

Source: D. D. McCauley
of Philco
under contract to
Western Support Office
(WSO-340)

NASA TECH BRIEF

NASA Tech Briefs are issued to summarize specific innovations derived from the U.S. space program, to encourage their commercial application. Copies are available to the public at 15 cents each from the Clearinghouse for Federal Scientific and Technical Information, Springfield, Virginia 22151.

Simple First Order Data Compression Processor Concept

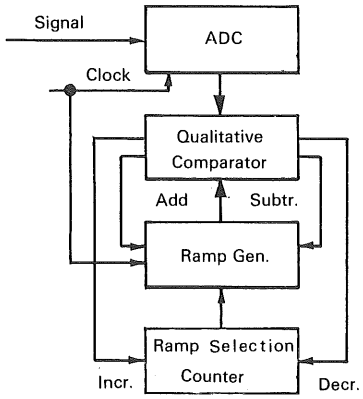

The problem:

Most prior art data-compression processing systems require the use of a computer. It is desirable to get away from such expensive and sophisticated systems and develop a system of simple counting and qualitative comparison functions requiring no computing functions or stored program operation.

The solution:

A system based on an analog-to-digital converter (ADC), includes a qualitative comparator for comparison of the ADC output with a ramp generator, which is connected as a bidirectional binary counter with selective inputs. A bidirectional "ramp" counter selects the proper ramp through a ramp generator selection network.

How it's done:

An analog signal is sampled at any arbitrary point in time by the ADC. For the next period of time, the signal is expected to follow one of a number of slopes. These slopes are generated by the digital ramp generator. This generator is simply a counter that is incremented or decremented in sync with the sampling of the signal by 1/4, 1/2, 1, 2, etc. units for each sample. The ramp generator is set to the value of the sample at the time the sample is accepted. The possible ramps form a fan with its vertex at the sample point. The ramps of the fan are numbered and a ramp is activated by the output of the ramp counter; that is, the signal will be compared only to that ramp or, more precisely, to two slopes that form the boundaries about the selected ramp. At the sample time the signal is at the center of this band. The positive and negative tolerance from the center ramp is named the aperture. The purpose of the comparison is to locate the first sample that lies outside the boundaries; this sample then will be accepted. The comparison is accomplished as follows: Each sample is compared to the reference signal, the selected ramp. Two outcomes are possible: either the signal is smaller or greater than the reference signal at the point of comparison. If the sample is greater, the aperture is added to the reference signal and a second comparison is made using the same comparator. Now the signal is compared to the reference signal plus the aperture.

(continued overleaf)

This document was prepared under the sponsorship of the National Aeronautics and Space Administration. Neither the United States Government nor any person acting on behalf of the United States Government assumes any liability resulting from the use of the information contained in this document, or warrants that such use will be free from privately owned rights.

There are two outcomes of this comparison: either the outcome is the same as the first, or it is not (i.e., it is the reverse). If it is the same, the sample is accepted; but if it is reversed, the signal is not accepted. If the outcome of the first comparison shows the signal to be smaller than the reference signal, the aperture is subtracted from the reference signal and a second comparison is made. If the outcome is the same (the signal smaller than the reference minus the aperture), the sample is accepted, otherwise not.

To simplify the addition or subtraction, the aperture is assumed to be one of the binary integers 1, 2, 4, 8 or 16, etc. The operation then becomes a simple count-up or count-down operation with the entry at the appropriate bit for the ramp generator and for the ramp selection counter, a simple up-down counter clocked at sample time if the last sample was accepted.

To select the most likely ramp, the ramp selection counter is decremented if the accepted sample is above the upper boundary of the tolerance band and incremented if the sample is below the lower boundary. The ramp generator is preset to the value of the sample. The more out of line the first arbitrary selection is, the more rapid the correction. When the correct ramp has been selected, fewer samples are accepted. The dynamic range of the ramp generator is assumed to be the same as for the ADC.

The qualitative comparator makes the decision as to whether the sample is accepted or rejected and the bidirectional ramp selection counter, operating through the ramp generator selection network, selects the proper ramp.

Note:

This development is in conceptual stage only and, as of date of publication of this Tech Brief, neither a model nor prototype has been constructed.

Patent status:

No patent action is contemplated by NASA.

Source: Tage O. Anderson
Jet Propulsion Laboratory
(NPO-10338)

NASA TECH BRIEF

NASA Tech Briefs are issued to summarize specific innovations derived from the U.S. space program, to encourage their commercial application. Copies are available to the public at 15 cents each from the Clearinghouse for Federal Scientific and Technical Information, Springfield, Virginia 22151.

Calibration Technique for Electromagnetic Flowmeters

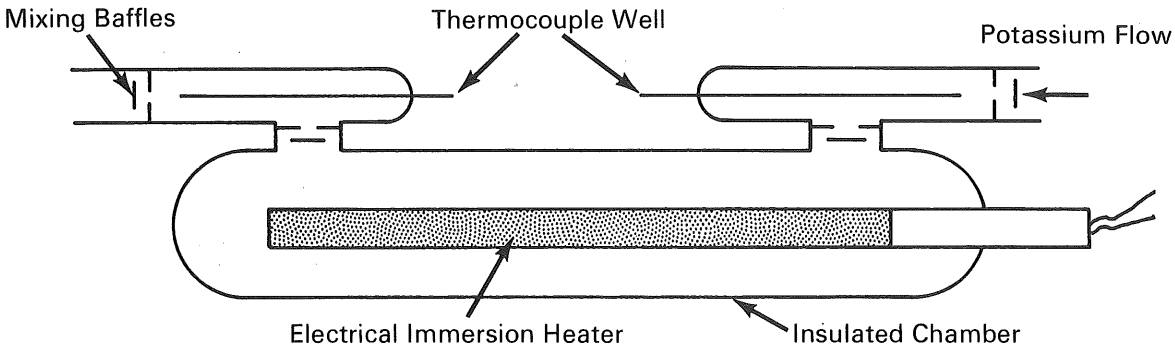

The problem:

To calibrate electromagnetic flowmeters for liquid alkali metals such as liquid potassium and liquid sodium.

The solution:

A thermal calorimetric method in which the electromagnetic flowmeter is placed in the liquid metal flow system in series with a thermal calorimeter.

How it's done:

An immersion heater is used for heat input to the calorimeter to assure that all of the heat input goes into the liquid metals' sensible heat. To determine the liquid metal flow rate, three parameters have to be known to solve the heat balance equation

$$W = \frac{q}{Cp\Delta T}$$

where

- w = flow rate
- q = heat input to calorimeter
- Cp = specific heat of liquid metal
- ΔT = liquid metal temperature increase across calorimeter due to heat input

The heat input to the calorimeter through the immersion heater is measured very accurately by a standard wattmeter. The calorimeter heat loss and the systematic temperature measurement error between the inlet and outlet thermocouples are determined by a special technique developed in the process of calibrating the thermocouples.

Simultaneously as the heat input to the calorimeter and temperature rise of the liquid metal at the inlet and outlet of the calorimeter are recorded, the electromagnetic flowmeter reading is recorded. Since the calorimeter and electromagnetic flowmeter are in series, the calculated flow rate through the calorimeter can be compared directly with the respective electromagnetic flowmeter reading.

Notes:

1. Flow rates calculated from the heat balance equation were used as the basis for calibration of an electromagnetic flowmeter for the liquid metal potassium over the following range of calorimeter conditions:

Potassium flow rate	0.14 to 0.31 lb/sec
Potassium temperature difference	11.5° to 43.4°F
Average potassium temperature	600° to 700°F
Calorimeter heat input	0.76 to 1.6 BTU/sec

(continued overleaf)

This document was prepared under the sponsorship of the National Aeronautics and Space Administration. Neither the United States Government nor any person acting on behalf of the United States Government assumes any liability resulting from the use of the information contained in this document, or warrants that such use will be free from privately owned rights.

2. Four sets of calibrations resulted in an average ratio of the calorimeter to electromagnetic flowmeter flow rates of 1.145 with a standard error of $\pm 1.3\%$.
3. Additional details are contained in NASA CR-851, *Thermal and Hydraulic Performance of Potassium during Condensation inside Single Tubes,* by S. G. Sawochka, August, 1967. Copies of this report are available from:

   Technology Utilization Officer
   Lewis Research Center
   21000 Brookpark Road
   Cleveland, Ohio 44135
   Reference: B67-10554

Patent status:

Inquiries about obtaining rights for the commercial use of this invention may be made to NASA, Code GP, Washington, D. C. 20546.

Source: S. G. Sawochka
of General Electric
under contract to
Lewis Research Center
(LEW-10328)

NASA TECH BRIEF

NASA Tech Briefs are issued to summarize specific innovations derived from the U.S. space program, to encourage their commercial application. Copies are available to the public at 15 cents each from the Clearinghouse for Federal Scientific and Technical Information, Springfield, Virginia 22151.

Improved Cavity-Type Absolute Total-Radiation Radiometer

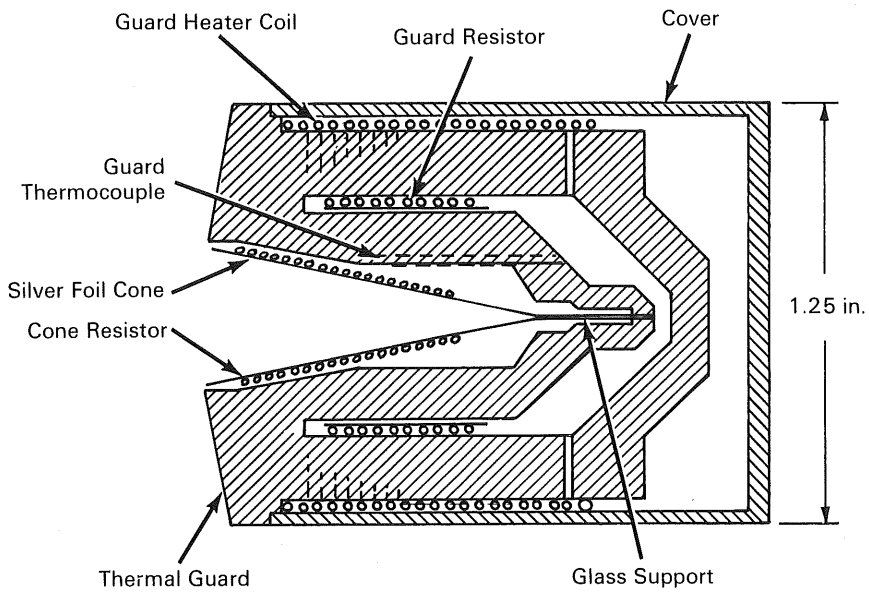

An improved conical cavity-type absolute radiometer, that has been developed, is capable of measuring the intensity of radiant energy to an accuracy of 1 to 2 percent when operated in a vacuum of 10^{-5} torr or lower. The radiometer exhibits a uniform response over the ultraviolet, visible, and infrared range. Since it is an absolute radiometer, it requires no calibration or comparison with a radiation standard. To measure a radiation intensity requires only an accurate knowledge of the aperture area, the temperature of the conical cavity, and the electrical power needed to maintain the cavity at a preset constant temperature. The basic elements of this radiometer are not new. The improvements are due to refinements in design details, selection of the best materials, and the use of modern electronics.

Physical description. The measuring element of the radiometer is a receptor made by winding enameled platinum wire (1.5 mils in diameter) over the outside surface of the hollow cone. The cone is made of 0.005-inch-thick silver foil which is rolled to shape and silver-soldered at the edges. The high thermal conductivity of the silver foil minimizes thermal gradients in the cone and also ensures rapid temperature equalization after any thermal change. The platinum wire (cone resistor) serves both as a sensitive resistance thermometer and as an electrical heating element for the cone. The internal surface of the cone is coated with Parson's black lacquer or with gold or platinum black. The cavity formed by the cone (23.5 deg total angle) is estimated to act as a perfect blackbody to better than 99.5 percent for all wavelengths between 0.2 and 40 microns.

(continued overleaf)

This document was prepared under the sponsorship of the National Aeronautics and Space Administration. Neither the United States Government nor any person acting on behalf of the United States Government assumes any liability resulting from the use of the information contained in this document, or warrants that such use will be free from privately owned rights.

The cone, supported by a glass fiber and glass-tipped centering screws, is surrounded by a massive copper thermal guard which is gold-plated on its inside and outside surfaces. The guard minimizes temperature gradients and radiant heat exchange with the receptor cone. Located in good thermal contact with the guard is a second platinum wire winding (guard resistor) which has the same electrical resistance as the cone resistor. The guard resistor serves as a resistance thermometer for accurate comparison of the guard and cone temperatures. A heater coil on the external surface of the guard is used to maintain the guard at a desired constant temperature. A thermocouple placed in the inner portion of the guard provides an absolute measure of guard temperature, and by means of an electronic control the guard is maintained at the desired temperature.

The electronic circuit devised for the radiometer maintains the thermal guard at a known constant preset temperature; supplies precisely enough electrical heating power to the cone (equal to the difference between the thermal energy radiated from the cone aperture and the thermal energy received by it from the radiant source to be measured); and accurately measures the electrical heating power to the cone.

Notes:

1. As presently constructed, the radiometer has a response time of approximately 2 seconds and is capable of measuring a maximum radiation intensity of approximately 0.3 watt/cm^2 (0.25 Btu/ft^2/sec), which is a little more than double solar intensity at 1 astronomical unit.
2. Inquiries concerning details of the radiometer and electronic circuitry may be directed to:

   Technology Utilization Officer
   Jet Propulsion Laboratory
   4800 Oak Grove Drive
   Pasadena, California 91103
   Reference: B67-10557

Patent status:

Inquiries about obtaining rights for the commercial use of this invention may be made to NASA, Code GP, Washington, D.C. 20546.

Source: J. M. Kendall, Sr.
and J. A. Plamondon, Jr.
(JPL-807)

NASA TECH BRIEF

NASA Tech Briefs are issued to summarize specific innovations derived from the U.S. space program, to encourage their commercial application. Copies are available to the public at 15 cents each from the Clearinghouse for Federal Scientific and Technical Information, Springfield, Virginia 22151.

Solid State Single-Ended Switching DC-to-DC Converter

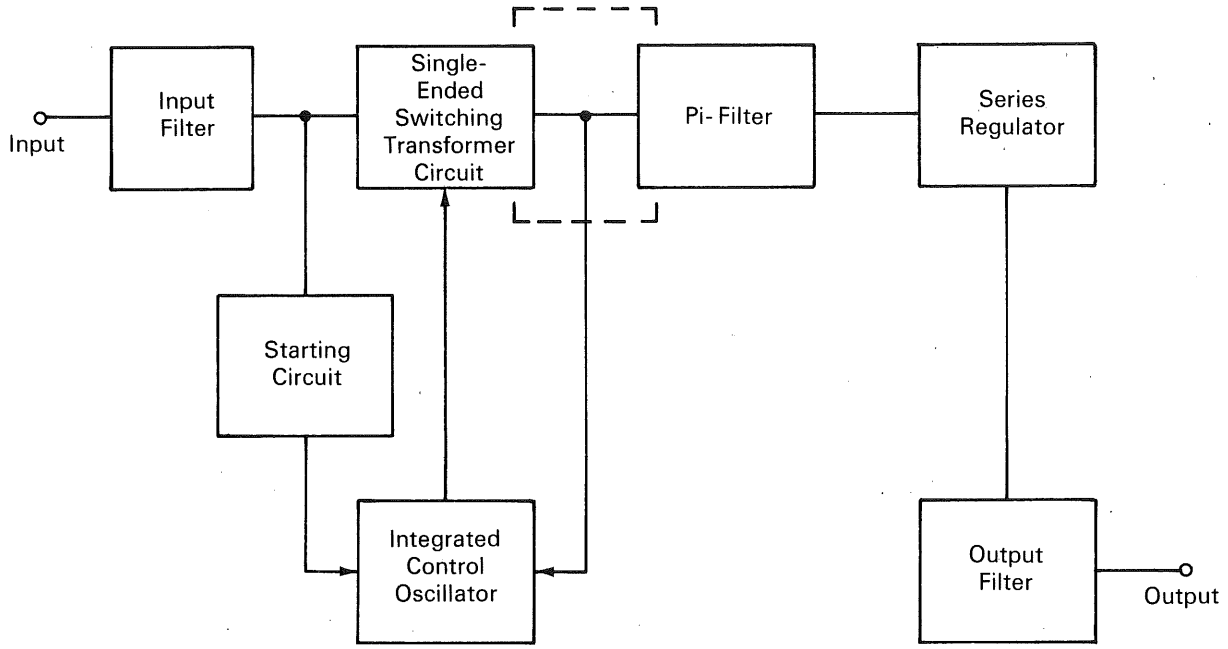

The problem:

In many circuit applications, a dc supply is required to be electrically isolated from the prime dc power source. Such isolation is normally obtained by means of a dc-to-dc converter involving several stages consisting of rather complex circuitry.

The solution:

A solid state, single-ended switching dc-to-dc converter that provides a highly regulated, electrically isolated dc output voltage with only one power stage.

How it's done:

The converter may be divided into seven distinct subcircuits as illustrated in the block diagram. The series regulator is required only where precise regulation must be had. The input and output filters are included specifically to enhance the electromagnetic compatibility of the converter and thus meet rather stringent radio frequency interference requirements.

The starting circuit performs two functions: it assures that the on time of its output transistor is of sufficient duration to start the integrated control oscillator at the lower temperature limit of −20°C; and it assures that the off time is long compared to the on time of the power transistor in the single-ended switching transformer circuit. In the integrated control oscillator, an astable multivibrator coupled with an integrated high performance operational amplifier, is used to control the operating frequency of

(continued overleaf)

This document was prepared under the sponsorship of the National Aeronautics and Space Administration. Neither the United States Government nor any person acting on behalf of the United States Government assumes any liability resulting from the use of the information contained in this document, or warrants that such use will be free from privately owned rights.

the converter, and thus, to regulate the output voltage.

Output voltage ripple associated with the converter storage capacitor is partially controlled by selecting a capacitor with a low dissipation factor and further decreased by adding an inductive-capacitive Pi-filter to this circuitry. The series regulator is designed to provide the desired regulation although a slight decrease in overall converter efficiency results from its use. It provides a high frequency cutoff and a decreased output impedance at the higher operating frequencies.

Notes:

1. Output voltage is within ±0.325% of the nominal 28 vdc output voltage over the complete design temperature, load, and input voltage ranges. The converter has a maximum dc output impedance of 0.1021 Ω and maintains an overall efficiency of approximately 80% under all operating conditions.
2. Inquiries concerning this innovation may be directed to:

   Technology Utilization Officer
   Marshall Space Flight Center
   Huntsville, Alabama 35812
   Reference: B67-10558

Patent status:

No patent action is contemplated by NASA.

Source: M. A. Honnell
of Auburn University
under contract to
Marshall Space Flight Center

(MFS-13598)

NASA TECH BRIEF

NASA Tech Briefs are issued to summarize specific innovations derived from the U.S. space program, to encourage their commercial application. Copies are available to the public at 15 cents each from the Clearinghouse for Federal Scientific and Technical Information, Springfield, Virginia 22151.

Solid State Zero-Bias Bilateral Switch

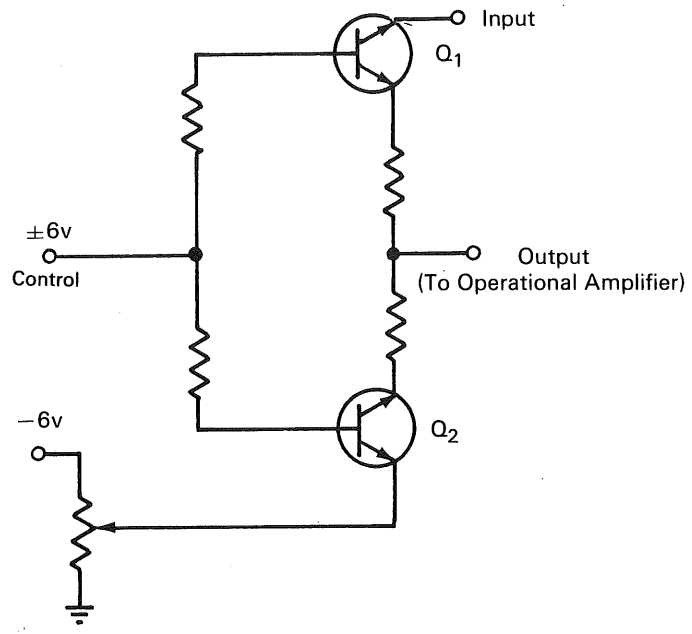

This circuit was designed to switch a ±2.5 volt peak, dc to 300 kHz input to an operational amplifier as controlled by a +6 (*on*) or −6v (*off*) signal.

The novel feature of this circuit is the use of the bilateral transistor Q_2 which draws a saturation current of equal amplitude and opposite polarity to the saturation current of the bilateral transistor Q_1. As a result, the dc bias effect is canceled at the output (input summing point of the operational amplifier). Since Q_2 is switched *on* whenever Q_1 is *on*, and *off* when Q_1 is *off*, the operational amplifier has a true zero dc bias in both signal *off* and signal *on* conditions.

Notes:

1. This switch should be useful in a wide variety of signal switching and control circuits.
2. Inquiries concerning this switch may be directed to:

   Technology Utilization Officer
   Goddard Space Flight Center
   Greenbelt, Maryland 20771
   Reference: B67-10559

Patent status:

No patent action is contemplated by NASA.

Source: J. M. Husted
of Radio Corporation of America
under contract to
Goddard Space Flight Center
(GSFC-532)

Category 01

This document was prepared under the sponsorship of the National Aeronautics and Space Administration. Neither the United States Government nor any person acting on behalf of the United States Government assumes any liability resulting from the use of the information contained in this document, or warrants that such use will be free from privately owned rights.

NASA TECH BRIEF

NASA Tech Briefs are issued to summarize specific innovations derived from the U.S. space program, to encourage their commercial application. Copies are available to the public at 15 cents each from the Clearinghouse for Federal Scientific and Technical Information, Springfield, Virginia 22151.

Flat Pack Interconnection Structure Simplifies Modular Electronic Assemblies

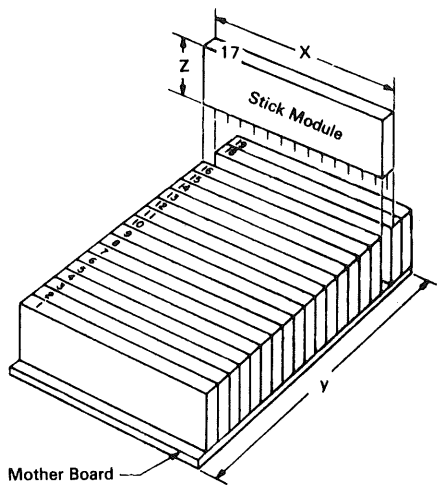

A modular system usually consists of a group of modules, each having an internal interconnection pattern and a mother board (or a back panel) which interconnects all of the modules. Both the mother board and the modules have their respective interconnecting networks employing at least two of the three axes of dimension, (the x, y, and z axes). As an example: Cordwood modules require all three axes (3-D) for interconnection. The multilayer board which interconnects the cordwood modules is also a three dimensional interconnection pattern. Each of these levels, the module and its carrier, require all three dimensions for interconnection. The need for using any of the three axes on more than one level was questioned. It was reasoned, that if the three axes could be distributed between the module and its carrier, without duplication, then a single axis mother board could result. If this were achieved, then the mother board would not require more than one level or layer for interconnections, since being single axis, it would have no crossovers. This, of course, would make a multilayer mother board interconnect unnecessary.

The "stick" module was evolved as a method of achieving a single axis mother board. The figure shows the distribution of the "x", "y", and "z" wiring planes as applied to the stick concept. The stick module has one of its dimensions, the length dimension, equal to the width dimension of the mother board. Because of this geometric relationship, the stick can act as the carrier of all "x" axis wires for itself and for the mother board. The stick also carries all of the "z" wires of the assembly, since it alone projects into that dimension. Since any individual stick does no

(continued overleaf)

This document was prepared under the sponsorship of the National Aeronautics and Space Administration. Neither the United States Government nor any person acting on behalf of the United States Government assumes any liability resulting from the use of the information contained in this document, or warrants that such use will be free from privately owned rights.

interconnecting in the "y" plane, all of the "y" wires and only the "y" wires remain in the mother board.

As a general rule, it is better to have a high level of interconnection complexity in a low level of assembly. By having the "x" and "z" wiring planes located exclusively in the stick module, which is the lower level of assembly, the above objective has been accomplished.

Since only the "y" plane wiring is located on the mother board, the interconnect geometry will consist of a series of parallel conductors, segmented as needed, and extending the full length of the mother board (in the "y" direction). These conductors can be insulated wire, printed circuit, nickel ribbon, or a special ribbon ladder.

Note:

Inquiries concerning this innovation may be directed to:

Technology Utilization Officer
Jet Propulsion Laboratory
4800 Oak Grove Drive
Pasadena, California 91103
Reference: B67-10560

Patent status:

No patent action is contemplated by NASA.

Source: Leonard Katzin
(JPL-819)

NASA TECH BRIEF

NASA Tech Briefs are issued to summarize specific innovations derived from the U.S. space program, to encourage their commercial application. Copies are available to the public at 15 cents each from the Clearinghouse for Federal Scientific and Technical Information, Springfield, Virginia 22151.

Transistor "h" Parameter Conversion Slide Rule

FRONT OF SCALE

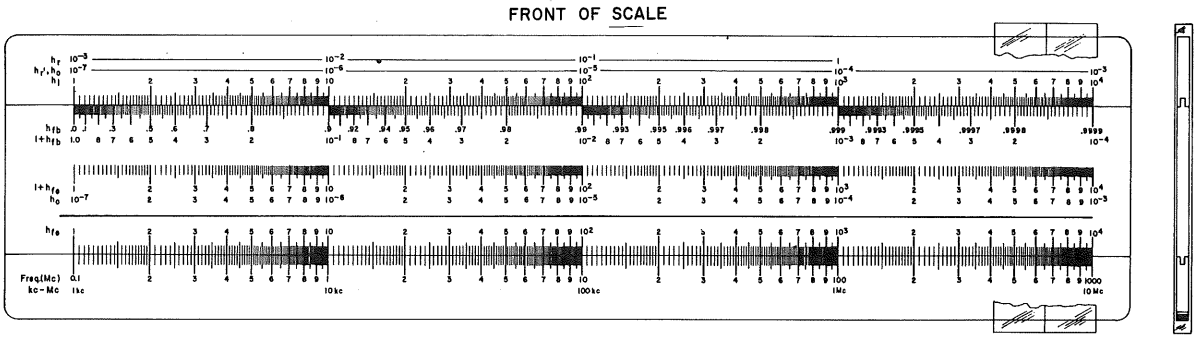

BACK OF SCALE

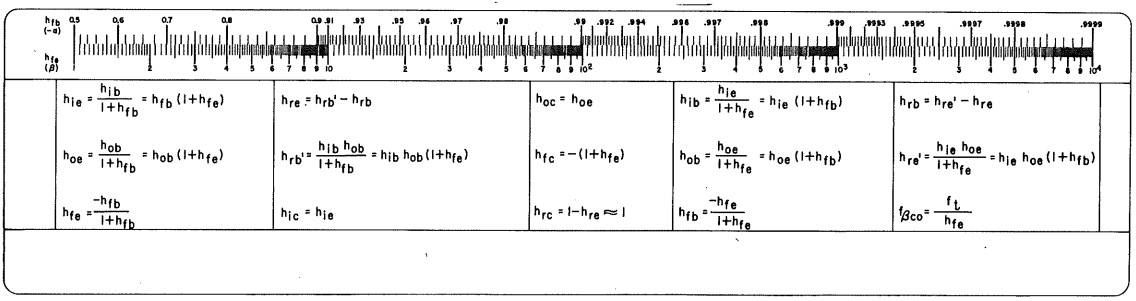

The problem:

In transistor circuit calculations, it is necessary to convert "h" parameters from one form to another. In the past this has involved a mass of pencil work calculations that are time consuming and vulnerable to human error.

The solution:

A slide rule that permits the ready conversion of transistor "h" parameters from one form to another and reduces calculation time by a factor of 5 to 10. The scales are selected to cover all ranges of each parameter that will normally exist for any transistor, and answers are given in the correct order of magnitude, making powers-of-ten calculations unnecessary.

How it's done:

Use of the formulas shown on the back of the slide rule may be demonstrated by one example:

$$h_{ie} = \frac{h_{ib}}{1 + h_{fb}}$$

where:

- h_{ie} is a common emitter with small signal input impedance and output ac short circuited;
- h_{ib} is a common base with small signal input impedance and output ac short circuited; and
- h_{fb} is a common base with small-signal short-circuit forward current transfer ratio and output ac short circuited.

Align the hairline of the cursor at the given value of h_i. The h_i scale is used for h_{ib}, h_{ic}, and h_{ie}. Now

(continued overleaf)

This document was prepared under the sponsorship of the National Aeronautics and Space Administration. Neither the United States Government nor any person acting on behalf of the United States Government assumes any liability resulting from the use of the information contained in this document, or warrants that such use will be free from privately owned rights.

move the slider until the given value of $1 + h_{fb}$ appears on the hairline. The required value of h_{ie} appears on the h_i scale opposite the index of the $1 + h_{fb}$ scale.

Note:

Inquiries concerning this innovation may be directed to:

California Institute of Technology
Research Foundation
Pasadena, California 91103
Reference: B67-10561

Patent status:

No patent action is contemplated by NASA.

Source: Roy E. Brantner
(JPL-649)

NASA TECH BRIEF

NASA Tech Briefs are issued to summarize specific innovations derived from the U.S. space program, to encourage their commercial application. Copies are available to the public at 15 cents each from the Clearinghouse for Federal Scientific and Technical Information, Springfield, Virginia 22151.

Improved Digital TV Encoding and Decoding System

An analog-to-digital coder and digital-to-analog decoder system has been designed to handle wide-band TV signals. The system incorporates solid state plug-in modular units which are mounted in standard 19-inch racks. By means of simple switch selection, the system may be operated in a VSD (Variable Slope Delta Modulation) mode or in the conventional one-bit DM (Delta Modulation) mode. When operated in its primary, VSD, mode, the system employs 4 encoding increments, with relative step sizes of ± 1, ± 2, ± 4, and ± 8. When operated as a conventional one-bit DM system, any one of the 4 increments may be selected. The system is capable of operating at a sampling rate of 30 MHz, which represents an advance over the prior state-of-the-art for VSD coders and decoders.

The input signal (a standard 1-volt peak-to-peak composite video) and the inverted predicted (quantized video) value are summed, resulting in a difference signal which is quantized in time and amplitude to form a polarity bit. When operated as a one-bit DM system, this polarity bit results in either a positive or negative pulse of current into the integrator which forms a new predicted value. The predicted value therefore represents a quantized version of the video signal. The polarity bit is transmitted to the decoder which is used to form an identical predicted value or quantized video signal. When operated in the VSD mode, pulses of ± 1, ± 2, ± 4, and ± 8 are used as determined by digital processing according to the present and past values of the polarity bit. The following algorithm describes VSD operation. On the third consecutive "same" polarity bit, increase the step size. Continue to increase the step size for a subsequent "same" polarity bit until the maximum step size is reached. When a polarity reversal occurs reduce the step size. For subsequent reversals, continue to reduce the step size until the smallest step size is reached. The technique employed to use the system as a conventional delta modulator is to lock up the reversing feedback shift register in the digital processor at a particular state. Thus a particular step size is always called for, its polarity determined by the polarity bit.

Notes:

1. A separate printed circuit plug-in test card is used to introduce either of two test patterns into the system. These test patterns are used for system setup, alignment, and troubleshooting.
2. Inquiries concerning this system may be directed to:

   Technology Utilization Officer
   Manned Spacecraft Center
   Houston, Texas 77058
   Reference: B67-10562

Patent status:

Inquiries about obtaining rights for the commercial use of this invention may be made to NASA, Code GP, Washington, D.C. 20546.

Source: A. R. Deutermann
of Philco-Ford Corporation
under contract to
Manned Spacecraft Center
(MSC-11147)

Category 01

This document was prepared under the sponsorship of the National Aeronautics and Space Administration. Neither the United States Government nor any person acting on behalf of the United States Government assumes any liability resulting from the use of the information contained in this document, or warrants that such use will be free from privately owned rights.

NASA TECH BRIEF

NASA Tech Briefs are issued to summarize specific innovations derived from the U.S. space program, to encourage their commercial application. Copies are available to the public at 15 cents each from the Clearinghouse for Federal Scientific and Technical Information, Springfield, Virginia 22151.

Logic Circuit Detects Both Present and Missing Negative Pulses in Superimposed Wavetrains

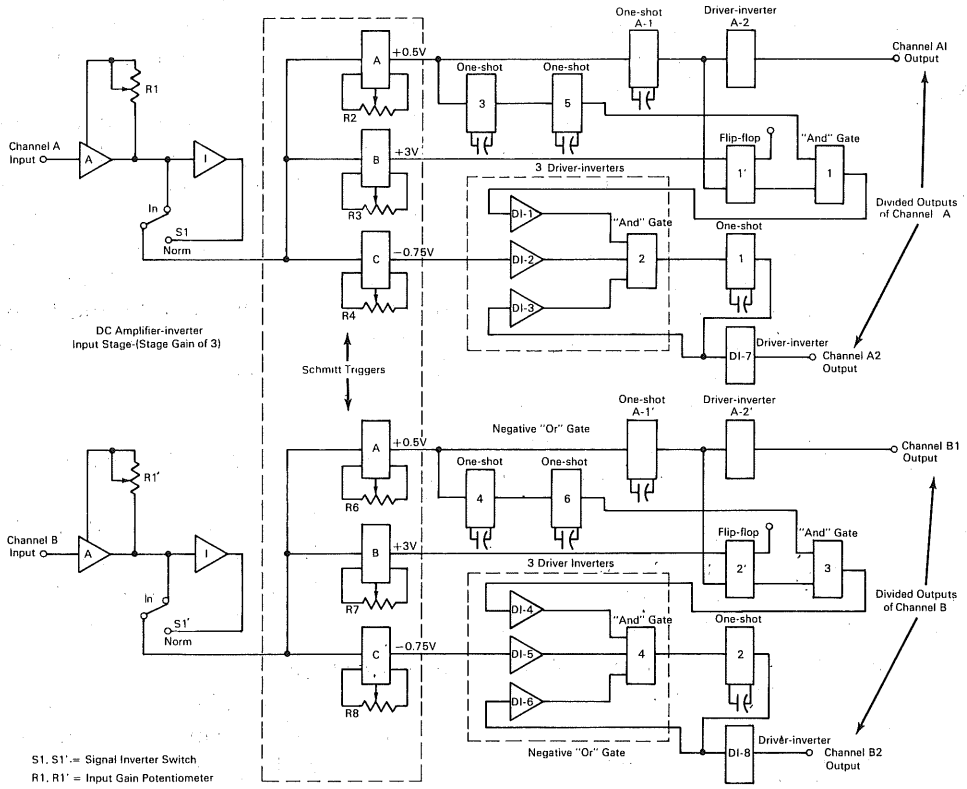

The problem:

To provide a device capable of detecting a negative polarity pulse in a signal containing superimposed negative and positive data pulse trains. Pulsed data, obtained as output from instrumentation such as flowmeters, is often formatted with positive data pulses from one channel added at twice their amplitude to negative data pulses from a second channel. Such data pulse trains are provided by an FM discriminator with low impedance output. A device is desired which can detect and separate negative polarity pulses and can also determine if a negative pulse is missing from its pulse train.

The solution:

A pulse divide and determination network, which provides a logical determination of pulse presence

(continued overleaf)

This document was prepared under the sponsorship of the National Aeronautics and Space Administration. Neither the United States Government nor any person acting on behalf of the United States Government assumes any liability resulting from the use of the information contained in this document, or warrants that such use will be free from privately owned rights.

within a data train. The network uses digital logic circuitry to perform three functions: (a) to divide positive and negative pulses; (b) to shape the separated pulses; and (c) to determine, by means of coincidence logic, if negative pulses are missing from the pulse train.

How it's done:

The pulse divide and determination network (PD–DN) consists of two separate Schmitt trigger and logic networks for input Channels A and B. Each PD–DN channel consists of: (1) an input-inverter stage of gain 3 at optimum linearity; (2) three parallel Schmitt trigger circuits simultaneously driven by the input stage; and (3) associated one-shot, driver–inverter and digital logic circuitry driven by the Schmitt triggers to perform the required logical decisions and provide required four data-channel pulse outputs (A1, A2, B1, B2).

Assume a typical input pulse train, with Schmitt triggers A, B, and C set to trigger at +0.5 V, +3.0 V, and −0.75 V respectively, simultaneously applied to Channel A and B inputs. This waveform is amplified by Channel A and B amplifier inverter stages (A and I) and fed to the parallel configuration of Schmitt trigger circuits. The output of trigger circuit "A" (Channels A and B) is obtained for any input pulse exceeding a level of +0.5 V and is applied to one-shots A-1 (Channel A) and A-1' (Channel B). These one-shots feed driver-inverters A-2 and A-2' with a 600±50 μ-second pulse. The driver inverters invert the signals and provide low output impedance signals at Channel A1 and B1 outputs. The outputs at Channels A1 and B1 are thus 1-to-1 derivatives of Schmitt trigger circuit "A".

The output required of Channels A2 and B2 is a logical derivation composed of either Schmitt "C" or not Schmitt "B" during Schmitt "A" ON time (i.e., "C"+"A"·"B"). By inverting the inputs to AND gates 2 and 4 with two sets of three driver–inverters (DI-1, 2, 3, 4, 5, and 6), the AND gates are changed to negative OR gates. Schmitt trigger "C" triggers at −0.75 volt and provides a series of pulses which are inverted by DI-2 and 5 and become one input to the negative OR gates. The positive outputs from the OR gates trigger one-shots 1 and 2, which feed a 600±50 μ-second pulse to driver inverters DI-7 and 8. DI-7 and 8 produce Channel A2 and B2 outputs for the case of Schmitt "C" present during Schmitt "A" ON time.

In the event of coincident positive and negative input pulses, the condition where the resulting negative pulse amplitude is not great enough to trigger Schmitt "C" may exist. Schmitt "B" is adjusted so that, in this event, the positive pulse will not trigger Schmitt "B". Since "A" is adjusted to detect all positive pulses, the determination of "B" not having fired during "A" ON time, is as follows: The leading edges of Schmitt "A" output pulses also trigger delay one-shots 3 and 4 which in turn trigger one-shots 5 and 6. Schmitt "B" output pulses set flip–flops 1 and 2; the FALSE outputs of flip–flops 1 and 2 provide the second input to the negative OR gates. The FALSE outputs to the OR gates are actually true when the flip–flops are not set. The outputs of AND gates 1 and 3 (from flip–flops 1 and 2 and one-shots 5 and 6) form the desired logical product "A"·"B" which is inverted by DI-1 and 4 and fed to the AND gates 2 and 4.

To prevent double triggering of one-shots 1 and 2, the outputs of one-shots 1 and 2 are inverted by DI-3 and 6 and provide a third input to the AND gates. A positive transition, emanating from the negative OR gate, is thus inhibited during the period one-shots 1 and 2 are ON. Flip–flops 1 and 2 are reset by the trailing edge of Channels A1 and B1 output pulses to prepare the flip–flop for the next determination of a Schmitt "B" output.

Note:

Inquiries concerning this invention may be directed to:

Technology Utilization Officer
Marshall Space Flight Center
Huntsville, Alabama 35812
Reference: B67-10565

Patent status:

Inquiries about obtaining rights for the commercial use of this invention may be made to NASA, Code GP, Washington, D.C. 20546.

Source: Richard E. Rice,
Douglas Aircraft Company
under contract to
Marshall Space Flight Center
(MFS-12518)

Reference Harold #775 Circuits

December 1967

Brief 67-10569

NASA TECH BRIEF

NASA Tech Briefs are issued to summarize specific innovations derived from the U.S. space program, to encourage their commercial application. Copies are available to the public at 15 cents each from the Clearinghouse for Federal Scientific and Technical Information, Springfield, Virginia 22151.

MOSFET Improves Performance of Power Supply Regulator

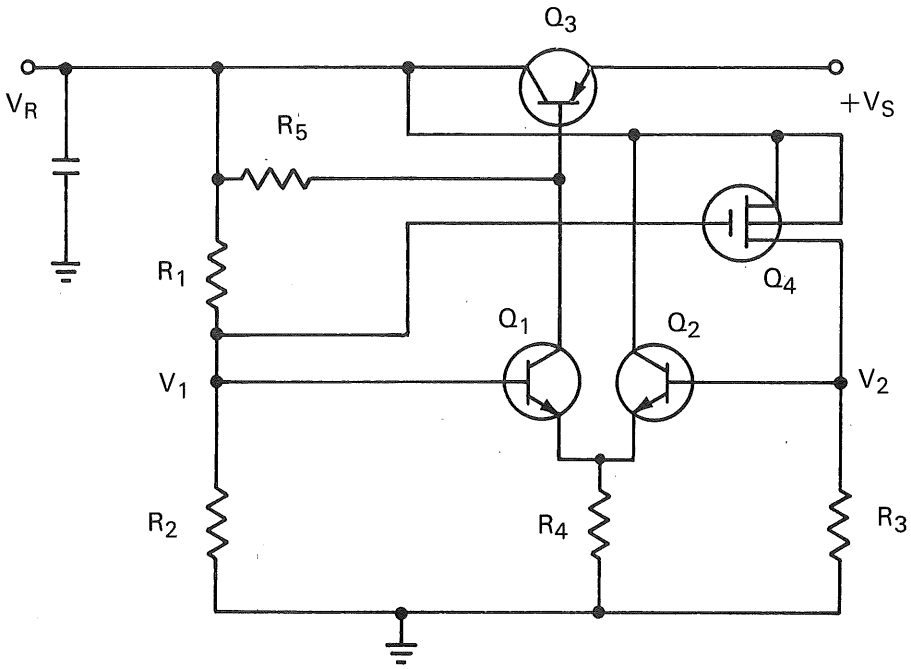

This circuit provides a higher degree of power supply voltage regulation and temperature compensation than a conventional circuit using a zener diode as a voltage reference. This improvement is effected by using a MOSFET (Metal Oxide Semiconductor Field Effect Transistor), Q_4, as the voltage reference in place of the zener diode. As in the case of the conventional regulator, the improved regulator utilizes a bridge circuit R_1, R_2, Q_4 (in place of a zener diode), and R_3 and a difference amplifier consisting of Q_1, Q_2, and R_4, with R_5 allowing initial operation at power turn-on. The regulator performance is determined by the voltage difference between V_1 and V_2 produced by a change in regulator supply V_R. The difference amplifier gain and the current gain of transistor Q_3 amplify this voltage difference to determine the closed loop performance. Cross coupling of the gate of Q_4 to the base of Q_1 allows Q_4 to serve also as an additional amplifier.

Note:

Inquiries concerning this circuit may be directed to:

Technology Utilization Officer
Goddard Space Flight Center
Greenbelt, Maryland 20771
Reference: B67-10569

(continued overleaf)

This document was prepared under the sponsorship of the National Aeronautics and Space Administration. Neither the United States Government nor any person acting on behalf of the United States Government assumes any liability resulting from the use of the information contained in this document, or warrants that such use will be free from privately owned rights.

Patent status:

Inquiries about obtaining rights for the commercial use of this invention may be made to NASA, Code GP, Washington, D.C. 20546.

Source: Donald C. Lokerson
(GSC-10022)

NASA TECH BRIEF

NASA Tech Briefs are issued to summarize specific innovations derived from the U.S. space program, to encourage their commercial application. Copies are available to the public at 15 cents each from the Clearinghouse for Federal Scientific and Technical Information, Springfield, Virginia 22151.

Analog Voicing Detector Responds to Pitch

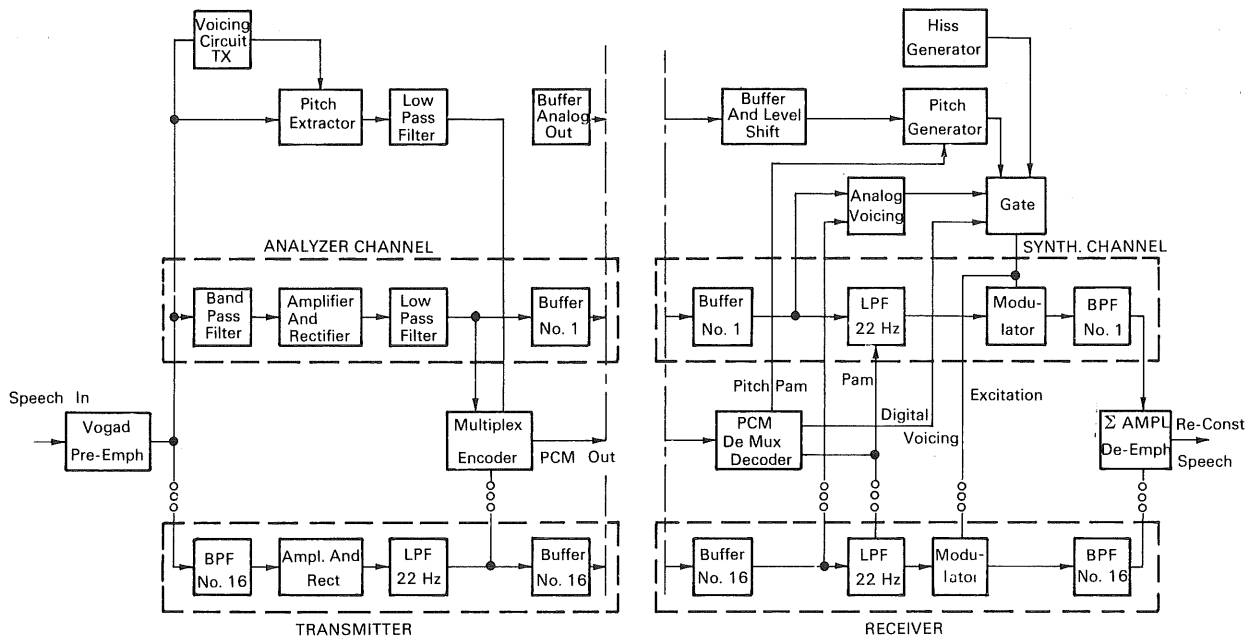

An existing, commercially available electronic voice encoder (Vocoder) has been modified to include an independent analog mode of operation in addition to the conventional digital mode. The Vocoder is a bandwidth compression equipment that permits voice transmission over channels having only a fraction of the bandwidth required for conventional telephone-quality speech transmission.

Referring to the diagram, the essential elements of a channel Vocoder consist of a voice operated gain adjustment (Vogad), a pitch extractor, and a bank of (N) contiguous bandpass filters each followed by an envelope detector. The Vogad maintains a relatively constant level to the analyzers regardless of the voice, and therefore, drives the analyzers at essentially the same level for all speakers. The envelope detector in each analyzer channel provides a low frequency parameter, commonly limited to 22 Hz variations, representing the speech energy in that frequency band. In some channel Vocoders, there are 16 such frequency bands covering the speech frequency range from 200 Hz to 4 kHz.

The pitch extractor develops an analog voltage proportional to the fundamental pitch frequency of the speech waveform during voiced sounds, this voltage being limited to variations at approximately the syllabic rate of 22 Hz. The total analog bandwidth is then 22 Hz $\times$ N+1 parameters, or 374 Hz. In the receiver, the analog parameters are modulated by an excitation source in the form of a voltage-controlled

(continued overleaf)

This document was prepared under the sponsorship of the National Aeronautics and Space Administration. Neither the United States Government nor any person acting on behalf of the United States Government assumes any liability resulting from the use of the information contained in this document, or warrants that such use will be free from privately owned rights.

oscillator that is controlled by the pitch signal. Unvoiced sounds are modulated by hiss which is gated in when the pitch signal is zero. The resulting signals are bandpass filtered in a set of contiguous filters, identical to those used in the analyzer, and then summed to form a facsimile of the original speech waveform.

For nominal digital operation, the low frequency parameters are time-division multiplexed to form a pulse amplitude modulated (PAM) signal that is then encoded in a binary manner for transmission in a pulse code modulated (PCM) system. The N+1 channel signals are sampled at 44.4 Hz to conform to the Nyquist sampling criterion and encoded in a 3-bit code. The pitch is encoded more accurately in a 6-bit code, resulting in a data rate of 2400 bps. Generally, one of the 16 channels is encoded in 2 bits and the remaining bit is used as a reference for synchronization. A PCM decoder in the receiver converts the PCM back to PAM form which is demultiplexed into the proper channels.

Notes:

1. Using a delta modulation technique, the Vocoder can operate at 1200 bps though there is a sacrifice in intelligibility and quality of the reconstructed signals. The PCM is readily adaptable to secure transmission; because of the nature of the signal, it is easily encrypted by combining with a preselected digital key.
2. Inquiries concerning this invention may be directed to:

   Technology Utilization Officer
   Goddard Space Flight Center
   Greenbelt, Maryland 20771
   Reference: B67-10571

Patent status:

Inquiries about obtaining rights for the commercial use of this invention may be made to NASA, Code GP, Washington, D.C. 20546.

Source: Ronald S. Abel and Harold E. Watkins
of Philco-Ford Corporation
under contract to
Goddard Space Flight Center
(GSC-10085)

NASA TECH BRIEF

NASA Tech Briefs are issued to summarize specific innovations derived from the U.S. space program, to encourage their commercial application. Copies are available to the public at 15 cents each from the Clearinghouse for Federal Scientific and Technical Information, Springfield, Virginia 22151.

Teleprinter Uses Thermal Printing Technique

An alphameric/facsimile printer receives serial digital data in the form of a specified number of bits per group, with the time duration of each bit a specified number of milliseconds. Each group of bits is followed by a data pause which will last a specified number of milliseconds. The printer prints a black dot on the thermally sensitive paper for each digital "one" received and prints nothing for each digital "zero" it receives. The first data bit per group is placed at the left edge of the paper and each succeeding bit is placed a specified distance to the right of the preceding dot position on the paper.

The thermal print head is composed of the same number of printing elements as there are bits per group. These print elements are arranged in a single line oriented across the specified width of the paper. Electrically, these print elements are energized in convenient subgroups. Each element in a subgroup has a common electrical terminal with other elements in the subgroup, and this common terminal is grounded by a solid state switch when it is the proper time for one or more of the elements in the subgroup to be heated in accordance with the incoming signal. The other terminal of each thermal element is connected via the gate terminal, a silicon-controlled rectifier (SCR), to a solid state shift-register stage which momentarily memorizes the incoming serial digital data. The shift register can memorize data for several subgroups of thermal elements; so at the time it is interrogated, it contains data for several subgroups of thermal elements.

A dc voltage is applied continuously to the anode of the SCR. If the cathode of the SCR is grounded and if there is a "one" in the shift register state to which the gate of the SCR is connected, the SCR will conduct. A print pulse is routed through an "AND" gate along with the grounder signal to the base of the grounder transistor. The print pulse turns on the grounder for an appropriate number of milliseconds. Since one side of a thermal printing element is connected to the cathode of the SCR, current will pass through the thermal element to the common electrical terminal for the group if the common is grounded by the grounder transistor at that time.

If there is a "zero" in the shift register stage to which the gate of the SCR is connected, the SCR will not conduct when the print pulse turns on the grounder transistor and, consequently, no current will flow in the thermal element connected to the SCR cathode.

The roll or fan-fold paper coated with a thermally sensitive dye is stored in or near the teleprinter assembly. The paper is routed between a pressure roller and the thermal head assembly. The paper is then pulled around the pressure roller as they both turn in discrete angular steps. The paper then passes through guides behind a preview window to a slot in the front panel where it exits for viewing by the observer.

Note:

Inquiries concerning this invention may be directed to:

Technology Utilization Officer
Manned Spacecraft Center
Houston, Texas 77058
Reference: B67-10572

(continued overleaf)

This document was prepared under the sponsorship of the National Aeronautics and Space Administration. Neither the United States Government nor any person acting on behalf of the United States Government assumes any liability resulting from the use of the information contained in this document, or warrants that such use will be free from privately owned rights.

Patent status:

Title to this invention has been waived under the provisions of the National Aeronautics and Space Act (42 U.S.C. 2457 (f)), to The National Cash Register Company, Menlo Park, California 94025.

Source: R. D. Perkins, W. E. Perkins,
D. G. Thomas, and J. W. Taylor
of The National Cash Register Company
under contract to
Manned Spacecraft Center
(MSC-11327)

NASA TECH BRIEF

NASA Tech Briefs are issued to summarize specific innovations derived from the U.S. space program, to encourage their commercial application. Copies are available to the public at 15 cents each from the Clearinghouse for Federal Scientific and Technical Information, Springfield, Virginia 22151.

Nondestructive Testing Techniques Used in Analysis of Honeycomb Structure Bond Strength

A research study was conducted to discover a means of detecting disbonds in composite structures. A portable, nondestructive testing and scanning/recording system, using ultrasonic techniques, was desired that would operate from one side only of a honeycomb panel to facilitate detection of the disbonds.

From theoretical and test data, a relationship was established between bond strength and the vibratory response of face sheets of honeycomb composite panels. Valid parameters were determined for the ultrasonic measurements of the bond strength of organic adhesives.

From this information, various methods of bond strength determination were proposed, of which the DOT (Driver-Displacement Oriented Transducer) method appears most applicable to both the lap shear type application and the honeycomb sandwich structures. This automatic inspection system, incorporating an electromagnetic driver and a displacement measuring system into a single unit, measures the displacement of the honeycomb composite face sheet at a given resonant frequency. The system has the distinct advantage of providing noncontact bond strength measurements. All tests measured the adhesive bond damping from the near side. Four types of honeycomb composite structures were fabricated to provide reference standards for evaluating both the ultrasonic techniques and the scanning/recording system. Deliberate disbonds, in the shape of triangles or squares, were located at predetermined interfaces on the honeycomb panels.

Based on the results of a comprehensive literature survey, five basic ultrasonic techniques were chosen as potential solutions for the honeycomb composite inspection problem. To evaluate these techniques, five breadboard systems were developed and tested: pulse echo interference, impedance, decrement, spectrum analysis, and intermodulation. The impedance system showed the most promise, and further development resulted in the successful detection and recording of disbonds in the specimens. Destructive tests were performed to verify the indicated disbonds.

A number of semiautomated scanning/recording systems were developed to supplement the ultrasonic technique evaluation. An advanced, fully automated, system was integrated with the ultrasonic detection system. This combined system (the DOT method) was characterized for transducer and circuit specifications, and operating instructions were prepared.

Notes:

1. The system allows remote testing of large surfaces with minimum surface disturbance, and should be of interest to industries engaged in nondestructive testing.
2. The research study report includes preparation of the composite specimens, equipment specifications, nondestructive test technique evaluations, development and characterization of the impedance system, determination of adhesive bond strength, conclusions, recommendations and references. A literature and industrial survey, including international publications, commercial equipment suppliers, and scientific and technical organizations, was conducted to maintain an awareness of current developments. Copies of this report are available from:

   Technology Utilization Officer
   Marshall Space Flight Center
   Huntsville, Alabama 35812
   Reference: B67-10574

(continued overleaf)

This document was prepared under the sponsorship of the National Aeronautics and Space Administration. Neither the United States Government nor any person acting on behalf of the United States Government assumes any liability resulting from the use of the information contained in this document, or warrants that such use will be free from privately owned rights.

Patent status:

Inquiries about obtaining rights for the commercial use of this invention may be made to NASA, Code GP, Washington, D.C. 20546.

Source: John F. Moore, Gordon Thomas, Donald C. Erdman, George Martin, and Harold S. Varney of North American Aviation, Inc. under contract to Marshall Space Flight Center (MFS-1214 and 1221)

NASA TECH BRIEF

NASA Tech Briefs are issued to summarize specific innovations derived from the U.S. space program, to encourage their commercial application. Copies are available to the public at 15 cents each from the Clearinghouse for Federal Scientific and Technical Information, Springfield, Virginia 22151.

Improved Frequency Divider Employs Transistor Avalanche Effect

A frequency divider circuit that has been developed can be synchronized over a much wider input control frequency range, has greater phase stability, and is less sensitive to temperature changes than conventional synchronized oscillators used to perform frequency division. The new circuit depends on the avalanche breakdown mode of operation of transistors. Typical characteristics of a divider circuit using the synchronized avalanche oscillator design for a frequency ratio of 57/221 are:

Input frequency, 21.9792 MHz
Output frequency, 5.6688 MHz
Bandwidth (controlled by crystal filter), ±33 kHz (−1 db)
Lock range, > 2 percent
Phase instability, approximately 0.01 deg rms

Note:

Inquiries concerning this circuit may be directed to:

Technology Utilization Officer
NASA Pasadena Office
4800 Oak Grove Drive
Pasadena, California 91103
Reference: B67-10575

Patent status:

Inquiries about obtaining rights for the commercial use of this invention may be made to NASA, Code GP, Washington, D.C. 20546.

Source: Carl E. Johns
Jet Propulsion Laboratory
(NPO-10008)

Category 01

This document was prepared under the sponsorship of the National Aeronautics and Space Administration. Neither the United States Government nor any person acting on behalf of the United States Government assumes any liability resulting from the use of the information contained in this document, or warrants that such use will be free from privately owned rights.

NASA TECH BRIEF

NASA Tech Briefs are issued to summarize specific innovations derived from the U.S. space program, to encourage their commercial application. Copies are available to the public at 15 cents each from the Clearinghouse for Federal Scientific and Technical Information, Springfield, Virginia 22151.

Multiplex Television Transmission System

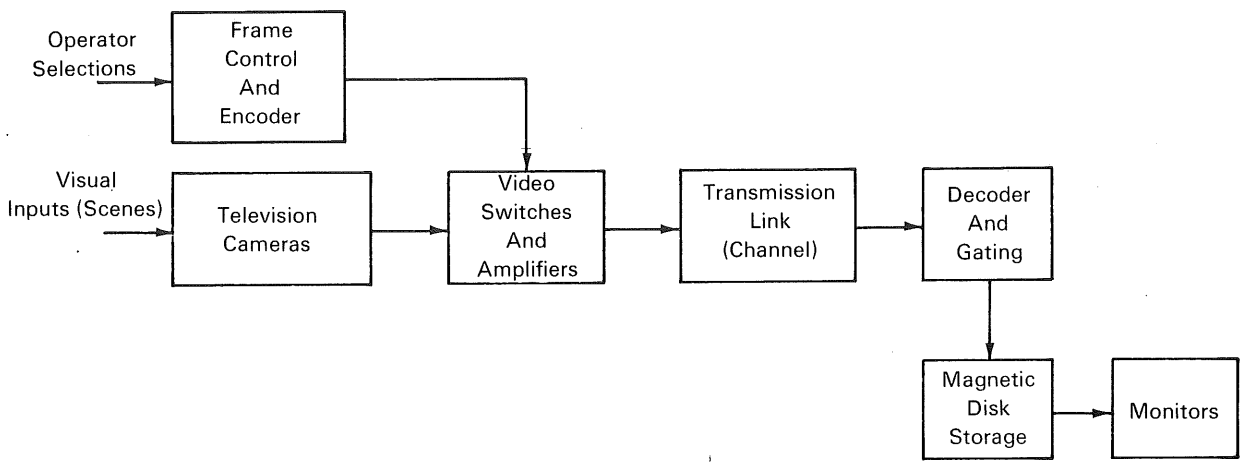

The problem:

The transmission of several different television pictures from cameras in one general location to viewers in a distant location normally requires a separate transmission channel for each camera. If the scenes viewed change slowly or not at all, the channels are used inefficiently, resulting in unnecessary expense.

The solution:

A time-multiplexing system that enables several cameras to share a single commercial television transmission channel.

How it's done:

A standard commercial television channel transmits thirty frames (complete scenes) per second. In the multiplex system (simplified block diagram), an operator at the camera end of such a standard transmission link uses control switches to assign the output of each camera to be transmitted during one or more particular frame times in each second, in any sequence he chooses. The sequence repeats once each second. The number of frames allocated to each camera is decided on the basis of the expected or observed rates of change of the several scenes to be viewed. Each transmitted frame is identified by digitally encoded signals added to the basic camera signal. Automatic equipment at the monitoring end of the link decodes the camera identification. It then routes the successively transmitted frames from the various cameras to the corresponding monitors and simultaneously to corresponding magnetic disk recorder/reproducer tracks. The recorded frames from each camera that is not transmitting are reproduced and channeled to the proper monitor at a rate of 30 frames per second. Every monitor thus receives 30 frames per second regardless of how often the content of the frame is changed (transmitted). In this way flicker-free pictures are obtained with resolution and signal-to-noise as good as in a multichannel camera system. Motion rendition would be the only picture quality sacrificed if the picture content changed rapidly.

(continued overleaf)

This document was prepared under the sponsorship of the National Aeronautics and Space Administration. Neither the United States Government nor any person acting on behalf of the United States Government assumes any liability resulting from the use of the information contained in this document, or warrants that such use will be free from privately owned rights.

Notes:

1. This system should be useful in industries wherever it is essential to visually monitor several operating areas or instrument panels from a remote location.
2. Inquiries concerning this system may be directed to:

   Technology Utilization Officer
   Manned Spacecraft Center
   Houston, Texas 77058
   Reference: B67-10576

Patent status:

Inquiries about obtaining rights for the commercial use of this invention may be made to NASA, Code GP, Washington, D.C. 20546.

Source: William R. Reed
(MSC-11595)

NASA TECH BRIEF

NASA Tech Briefs are issued to summarize specific innovations derived from the U.S. space program, to encourage their commercial application. Copies are available to the public at 15 cents each from the Clearinghouse for Federal Scientific and Technical Information, Springfield, Virginia 22151.

Computer Memory Access Technique

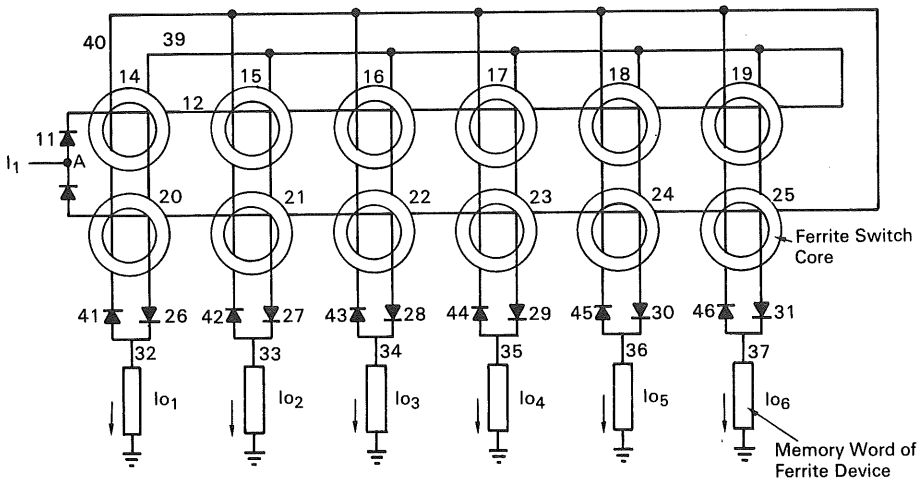

IMPROVED COMMUTATOR

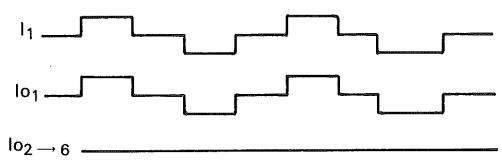

TIMING & PULSE DIAGRAM

A computer memory access commutator is associated with a core memory for storing or reading binary data whereby a wire may be deleted from each row and/or column in a typical 4-wire memory. This access commutator and steering gate configuration produces bipolar current pulses while still employing only the diodes and magnetic cores of the classic commutator, thereby appreciably reducing the complexity of the memory assembly.

Current I_1 is applied at a time when it is a positive-going current pulse at point A. Current flows through diode 11 and through wire 12 threaded through cores 14 through 19. The current I_1 attempts to switch core 14 into a reset state. As core 14 switches, it generates a voltage on wire 39 which forward biases diode 26. This forward bias permits the current I_1 to be steered through core 20, diode 26, wire 32, and the memory word Io_1 (positive direction).

As core 14 switches from set to reset in the above description, the current I_1 sets core 20. The developed voltage on core 14 then back biases diodes 27, 28, 29, 30, and 31 at the common node which terminates in wire 39.

The developed voltage (positive) on the cathode of diode 26 forward biases diode 41. The voltage at the cathode of diode 41 is positive; it back biases diodes

(continued overleaf)

This document was prepared under the sponsorship of the National Aeronautics and Space Administration. Neither the United States Government nor any person acting on behalf of the United States Government assumes any liability resulting from the use of the information contained in this document, or warrants that such use will be free from privately owned rights.

42, 43, 44, 45, and 46 through common node termination wire 40.

As I_1 flows through diode 26, it becomes Io_1.

At a later time I_1 may be a negative current pulse. All functions are the same as in the analysis for the positive pulse with the identification of active elements exchanged with the inactive elements at like stages; e.g., Io_1+, Io_1-; diodes 26, 41; wires 39, 40; diodes 27, 42; cores 14, 20.

Note:

Inquiries concerning this invention may be directed to:

Technology Utilization Officer
NASA Pasadena Office
4800 Oak Grove Drive
Pasadena, California 91103
Reference: B67-10585

Patent status:

Inquiries about obtaining rights for the commercial use of this invention may be made to NASA, Code GP, Washington, D.C. 20546.

Source: Lawrence J. Zottarelli
Jet Propulsion Laboratory
(NPO-10201)

NASA TECH BRIEF

NASA Tech Briefs are issued to summarize specific innovations derived from the U.S. space program, to encourage their commercial application. Copies are available to the public at 15 cents each from the Clearinghouse for Federal Scientific and Technical Information, Springfield, Virginia 22151.

Laser Communication System Is Insensitive to Atmospherically Induced Noise

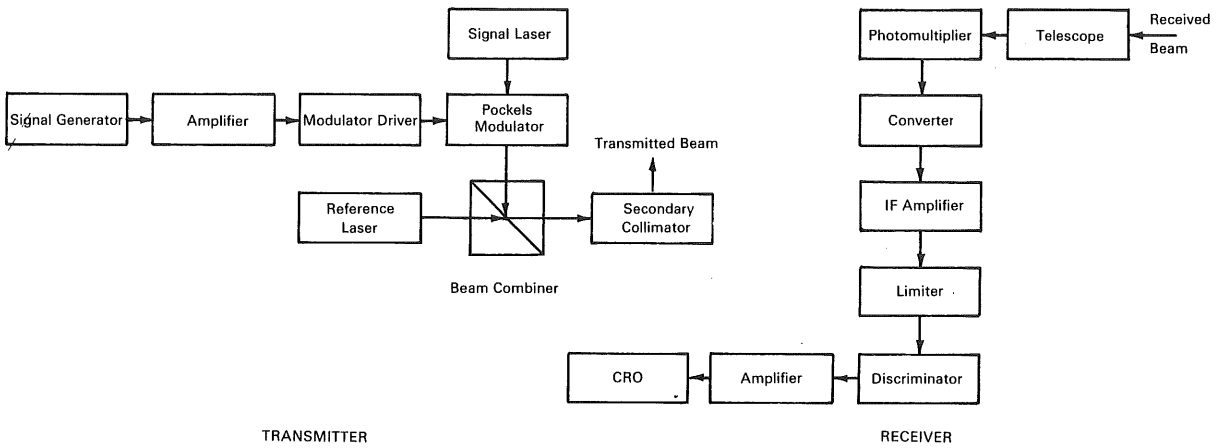

The problem:

To develop an optical communication system that is insensitive to atmospherically induced amplitude noise fluctuations and phase distortions.

The solution:

An angle modulated transmitted reference heterodyne laser communication system. The block diagram shows an implementation of the system for single-frequency subcarrier modulation.

How it's done:

The modulation waveform (intelligence) derived from the signal generator, is amplified and applied to a Pockels cell modulator (using a 45° Y-cut ADP crystal) that phase modulates the signal laser beam in synchronism with the modulation waveform. The signal beam laser and reference beam laser are tuned, servo-locked, and stabilized to a difference frequency of 300 MHz. The beams are collimated, combined, and transmitted through the atmosphere to the receiver. At the receiver, the beam through the telescope is focused on a photomultiplier detector and the difference frequency is generated. The 300 MHz difference signal is amplified, converted to a 60 MHz second IF, amplified, limited, and discriminated to recover the modulation waveform which is amplified and displayed on a cathode ray oscilloscope.

Note:

Inquiries concerning the design and characteristics of this system may be directed to:

Technology Utilization Officer
Goddard Space Flight Center
Greenbelt, Maryland 20771
Reference: B67-10587

(continued overleaf)

This document was prepared under the sponsorship of the National Aeronautics and Space Administration. Neither the United States Government nor any person acting on behalf of the United States Government assumes any liability resulting from the use of the information contained in this document, or warrants that such use will be free from privately owned rights.

Patent status:

Inquiries about obtaining rights for the commercial use of this invention may be made to NASA, Code GP, Washington, D.C. 20546.

Source: John N. Packard
of Aircraft Armaments, Inc.
under contract to
Goddard Space Flight Center
(XGS-10396)

NASA TECH BRIEF

NASA Tech Briefs are issued to summarize specific innovations derived from the U.S. space program, to encourage their commercial application. Copies are available to the public at 15 cents each from the Clearinghouse for Federal Scientific and Technical Information, Springfield, Virginia 22151.

Conceptual Servo Technique for Controlling Tape Drivers

The problem:

Quality performance in a magnetic tape system requires that the tape be driven in quite close synchronism at the airborne and ground stationed devices. Long term speed variation or instantaneous speed perturbations must be avoided in the airborne system lest frequency distortion and flutter exceed ground-based system tolerance.

The solution:

An electronic speed control designed to maintain long term speed accuracy in tape transport systems within ±5 microseconds at a tape speed of 30 inches per second and to control flutter to within 0.8% rms from dc to 5 kHz.

A tachometer, which is an integral part of the motor assembly, provides an output signal that is fed to a tachometer amplifier and then to a frequency discriminator. The output of the frequency discriminator is a voltage level that is inversely proportional to the input frequency. The output of the frequency discriminator drives an operational amplifier that provides the proper loop gain and compensation required for loop stability. The output of the operational amplifier is then fed to the motor driver which raises the loop power level to a point high enough to provide the required motor torque.

The phase detector loop is used to compare the phase of a reference frequency recorded on the tape to the same phase and frequency of a precise reference oscillator. The output of the phase detector is a voltage proportional to the phase difference between the signal recorded on the tape and the output from the precision reference oscillator. This phase error voltage is applied to the loop amplifier to further correct the tape speed.

The recorder/reproducer system is provided with a tape which has a precision 30 kHz reference signal recorded on the reference track. During the record mode the recorder is phase locked to this previously recorded signal. The tachometer loop is used as a back-up system during periods when loss of signal due to tape dropouts occurs. At the same time a precision 30 kHz signal is being recorded on a second reference track to ensure that the servo system will correct flutter introduced during the record mode when the unit is in the reproduce mode. During the reproduce mode the recorder is phase locked to the second reference track with the tachometer loop again being used as a back-up system during periods of loss of signal due to dropouts.

Use of the servo system during the record and reproduce modes results in the minimum amount of frequency distortion and flutter. The time displacement error will then be held to less than one period of the reference oscillator frequency.

Notes:

1. The approach described would permit the design of a multispeed high-performance recorder/reproducer system, where the tape speed would be electronically selected. This system would do away with belts, gears and clutches or other mechanical speed changing devices. Speed selection could then be accomplished by changing circuit constants in the servo system electronics.
2. This development is in conceptual stage only, and, as of date of publication of this Tech Brief, neither a model nor prototype has been constructed.

Patent status:

No patent action is contemplated by NASA.

Source: R. Couchman and R. Bentley
of Kinelogic Corporation
under contract to
Marshall Space Flight Center
(MFS-12955)
Category 01

This document was prepared under the sponsorship of the National Aeronautics and Space Administration. Neither the United States Government nor any person acting on behalf of the United States Government assumes any liability resulting from the use of the information contained in this document, or warrants that such use will be free from privately owned rights.

NASA TECH BRIEF

NASA Tech Briefs are issued to summarize specific innovations derived from the U.S. space program, to encourage their commercial application. Copies are available to the public at 15 cents each from the Clearinghouse for Federal Scientific and Technical Information, Springfield, Virginia 22151.

Cardiotachometer with Linear Beat-to-Beat Frequency Response

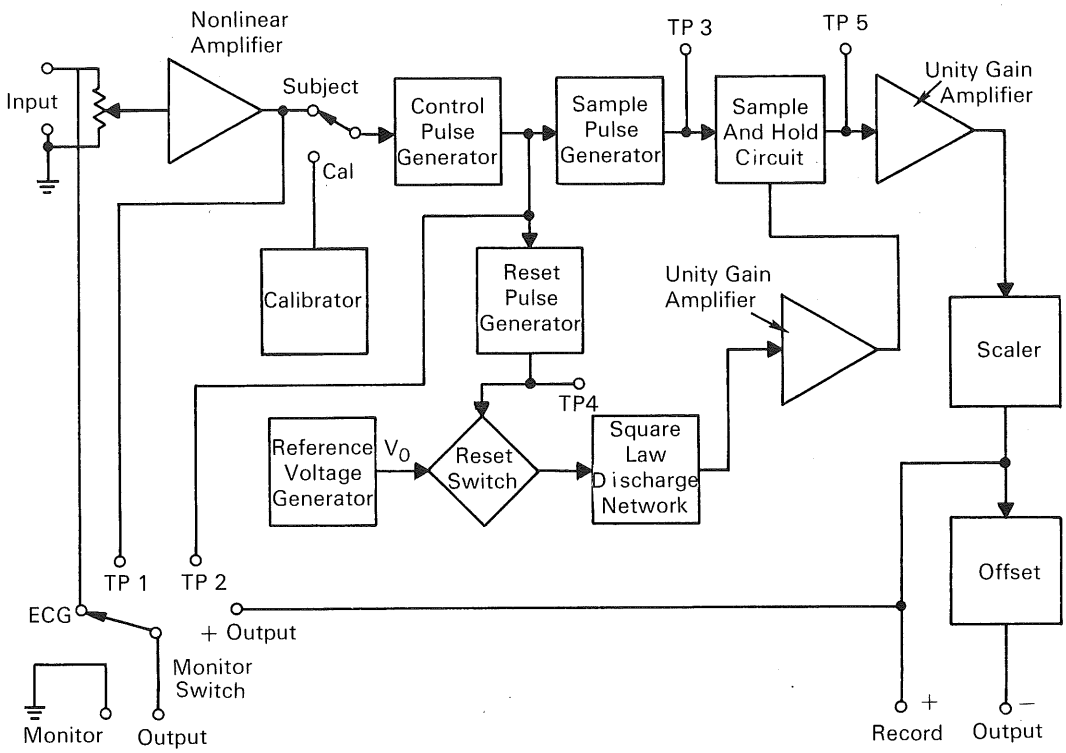

The problem:

To develop an instrument that will continuously detect and immediately display, to a high order of accuracy, the heart rate of human subjects and larger animals during physiological studies. The system, to be versatile, should have a linear response, a great enough range to record heart rate of a subject during rest and under heavy stress, provide a beat-to-beat indication of changes in heart rate rather than an average over several cycles, and should be relatively free of interfering signals from activities other than the heart rate.

The solution:

A cardiotachometer employing a nonlinear amplifier together with an exponential (square law) resistor and a capacitor which form a square law discharge network, making possible a linear response to the heart rate. Suitable clipping and filtering minimize interfering signals. Solid state circuitry assures reliable operation, and even in cases of severe arrhythmia, the instrument follows changes in beat-to-beat frequency with an accuracy of ±1 beat per minute. The cardiotachometer is designed to accept input

(continued overleaf)

This document was prepared under the sponsorship of the National Aeronautics and Space Administration. Neither the United States Government nor any person acting on behalf of the United States Government assumes any liability resulting from the use of the information contained in this document, or warrants that such use will be free from privately owned rights.

pulses derived from recordings of the electrocardiogram, plethysmogram, or blood pressure wave.

How it's done:

The heart rate is recorded linearly, by measuring the time interval between successive pulses and converting it into a voltage proportional to the reciprocal of the interval. This is accomplished by charging a capacitor to an initial reference voltage at the beginning of each time interval and after a fixed time delay, discharging the capacitor through a resistive element with characteristic current flow proportional to the square of the applied voltage (square law element). The capacitor voltage at any time after discharge begins is proportional to the input frequency. The following requirements were met for this application.

a. A range of 30 to 270 beats per minute.
b. An overall accuracy of ± 1 beat per minute over the linear operating range.
c. A beat-to-beat output response that follows a rapidly varying input rate within the ± 1 beat accuracy specification.
d. Reliable operation when used with moderately active subjects.

The cardiotachometer is designed for use with an input pulse of approximately 0.2 volt. Recordings with the instrument of tests on subjects doing sit-up exercises and running in place demonstrated reliable operation with moderately active subjects. Accurate beat-to-beat output responses within the ± 1 beat per minute specifications were demonstrated even on subjects with pronounced arrhythmia.

Notes:

1. The cardiotachometer can easily be modified to operate at higher frequency ranges and still retain its linear beat-to-beat characteristics. For major frequency changes, the bandpass characteristics of the nonlinear amplifier would have to be modified.
2. The accuracy of this method depends on the accuracy of the square law element.
3. The introduction of clipping and coupling and bypass networks in the nonlinear amplifier allows transmission of the peaks of the R wave in the ECG while minimizing the transmission of baseline shifts and other unwanted signals. Optimal triggering of the instrument was achieved with a bandpass of approximately 8 to 40 Hz. It might be desirable to restrict the bandpass further for subjects under very strenuous exercise.
4. To obtain a reliable trigger pulse under a variety of experimental conditions, a monitor selector switch allows the experimenter to monitor the trigger pulse at several test points within the circuitry. Thus, the pulse can be precisely adjusted within the circuitry to give optimal trigger reliability.
5. Calibration of the instrument is provided for by the inclusion of a conventional unijunction transistor pulse generator with selectable rates of 60, 80, 120, 180, and 240 pulses per minute. These calibrated pulse rates can be inserted into the system in place of the normal input signal.
6. Additional details are contained in *A Cardiotachometer with Linear Indication of Beat-to-Beat Frequency,* by Jack M. Pope, Gordon J. Deboo, and David B. D. Smith, Ames Research Center. Copies of this paper are available from:

   Technology Utilization Officer
   Ames Research Center
   Moffett Field, California 94035
   Reference: B67-10598

Patent status:

No patent action is contemplated by NASA.

Source: J. M. Pope, G. J. Deboo, and D. B. D. Smith (ARC-10033)

NASA TECH BRIEF

NASA Tech Briefs are issued to summarize specific innovations derived from the U.S. space program, to encourage their commercial application. Copies are available to the public at 15 cents each from the Clearinghouse for Federal Scientific and Technical Information, Springfield, Virginia 22151.

Multipulse Current Source Offers Low Power Losses and High Reliability

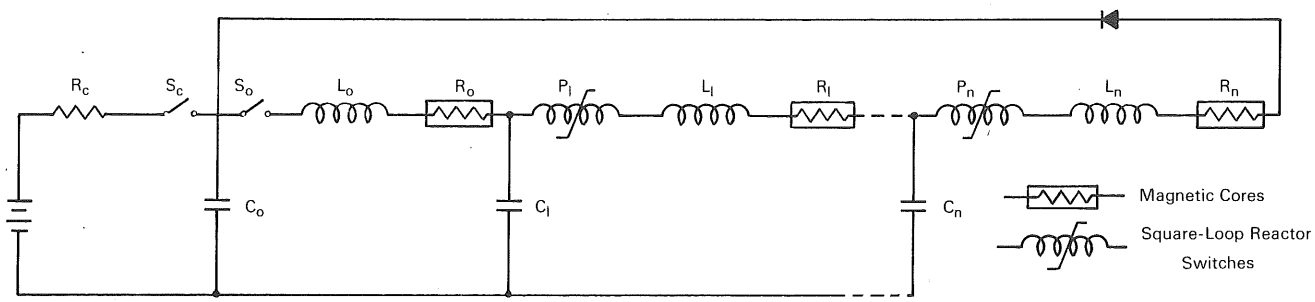

The problem:

Magnetic memory cores, frequently used in digital computational equipment, require a source of current pulses for drive power. Since the impedance of the magnetic core is a function of its direction of saturation, (i.e., information state), the current source must present a high impedance to the cores. This is usually accomplished by placing a high resistance in series with the core. This however, results in extensive power loss. In addition, the large number of semiconductor switches required decreases the reliability of the current source.

The solution:

A pulse current source which uses low loss, high Q, LC circuits to provide the necessary high impedance. Square-loop reactors are used to replace the semiconductor switches.

How it's done:

Each of the identical stages of the pulse current source serves as a high-impedance current source for the next stage. A current pulse is generated in succeeding stages when switch S_o is closed. Energy remaining at the final stage is returned to the initial energy storage capacitor, C_o. Since the only energy dissipated in the circuit is in the switching resistance of the magnetic cores, the system is highly efficient.

The capacitor (C) of each stage will charge through the high Q inductor (L), square loop reactor (P), and magnetic core (R) of the preceding stage. When the square-loop reactor is in one saturated state it presents a high impedance to the charging current. The leakage current through the square-loop reactor will start to change its direction of saturation. The reactor switches into opposite saturation just as the capacitor becomes fully charged. In this state, the reactor presents a low impedance to the charge on the capacitor, which allows the capacitor to discharge, thereby developing a current pulse in the magnetic core. A small amount of current also flows back into the preceding stage, resetting that reactor to its original state. This process will be repeated through all of the stages until the discharge of the last capacitor (C_n) recharges C_o. Due to the losses in the magnetic cores, however, C_o is not fully charged, and because of diode D_1, the last reactor (P_n) has not been reset. C_o can be recharged by closing S_c, and P_n can be reset by placing a separate reset winding on the reactor which could be activated by the discharge of C_o.

Notes:

1. The switches shown can be replaced by electromechanical (relays) or electronic (transistors) elements.

(continued overleaf)

This document was prepared under the sponsorship of the National Aeronautics and Space Administration. Neither the United States Government nor any person acting on behalf of the United States Government assumes any liability resulting from the use of the information contained in this document, or warrants that such use will be free from privately owned rights.

2. This invention should be of interest to manufacturers of computer memory equipment.
3. Inquiries concerning this invention may be directed to:

   Technology Utilization Officer
   Langley Research Center
   Langley Station
   Hampton, Virginia 23365
   Reference: B67-10603

Patent status:

Title to this invention has been waived under the provisions of the National Aeronautics and Space Act [42 U.S.C. 2457 (f)] to the Stanford Research Institute, Menlo Park, California 94025.

Source: Stanford Research Institute
under contract to
Langley Research Center
(LaRC-68)

NASA TECH BRIEF

NASA Tech Briefs are issued to summarize specific innovations derived from the U.S. space program, to encourage their commercial application. Copies are available to the public at 15 cents each from the Clearinghouse for Federal Scientific and Technical Information, Springfield, Virginia 22151.

Prediction of Radiation Damage Effects in Transistors

Experimental measurements supported by a theoretical analysis have established quantitative relationships between the radiation dose (due to high energy particle bombardment in a space environment) to which transistors are exposed and the resultant damage (expressed as a damage factor) to the transistors. The overall damage factor for a particular transistor normally consists of two additive parts: (1) a bulk damage factor and (2) an ionization damage factor. The anticipated bulk-damage radiation dose in DENI's (Damage Equivalent of Normally Incident 1 MeV Electrons) and the anticipated ionization damage radiation dose in rads must be known in order to calculate the corresponding damage factors. Calculation of these dose levels is based on high energy particle population data and analysis of the shielding effect provided by the enclosures surrounding a given transistor.

Note:

Inquiries concerning these relationships may be directed to:

Technology Utilization Officer
Goddard Space Flight Center
Greenbelt, Maryland 20771
Reference: B67-10606

Patent status:

No patent action is contemplated by NASA.

Source: Radio Corporation of America
under contract to
Goddard Space Flight Center
(GSC-10021)

Category 01

This document was prepared under the sponsorship of the National Aeronautics and Space Administration. Neither the United States Government nor any person acting on behalf of the United States Government assumes any liability resulting from the use of the information contained in this document, or warrants that such use will be free from privately owned rights.

NASA TECH BRIEF

NASA Tech Briefs are issued to summarize specific innovations derived from the U.S. space program, to encourage their commercial application. Copies are available to the public at 15 cents each from the Clearinghouse for Federal Scientific and Technical Information, Springfield, Virginia 22151.

Study of Thermal Effects on Nickel–Cadmium Batteries

An investigation was made of space battery performance, with special emphasis on the thermal effects of nickel–cadmium batteries operating under continuous orbital conditions. During the program, a literature survey was conducted on the calorimetry and thermodynamics of electrochemical systems, specifically nickel–cadmium batteries. An improved isothermal continuous flow calorimeter was designed, constructed and calibrated. A 6 ampere-hour Gulton prismatic nickel–cadmium battery was tested under numerous orbital conditions. Cell data, such as oxygen pressure and the rate of heat generation, were collected and the changes in enthalpy (ΔH) for the system undergoing the various processes were calculated.

The Gulton 6 AH prismatic nickel–cadmium batteries, preconditioned and complete with Adhydrode electrodes, were subjected to a series of experiments which varied in depth of discharge, percentage recharge and number of cycles as follows:

(a) 79 cycles undergoing 25% depth of discharge and a 110% recharge.
(b) 74 cycles undergoing 15% depth of discharge and a 114% recharge.
(c) 93 cycles undergoing 25% depth of discharge and a 114% recharge.

During these tests, the oxygen pressure in the cell and the rate of heat generation by the cell were recorded. The enthalpy changes, corresponding to the reactions occurring during the charge and discharge processes, were calculated from the thermal data. These values were in excellent agreement with the literature values for these reactions.

The isothermal continuous flow calorimeter, developed for the thermal measurements, was calibrated over the range of 0.10 to 1.00 watt. This range is characteristic of the thermal output of a 6 ampere-hour Ni–Cd cell. The thermal response was found to be linear in this range and the instrument was sensitive to 0.01 watt. This is 28 times as sensitive as calorimeters previously used; temperature changes of 0.00096°C are detectable.

Notes:

1. Tech Brief B67-10615 contains information on the improved calorimeter.
2. Additional details are contained in *Research into Fundamental Phenomena Associated with Spacecraft Electrochemical Devices—Calorimetry of Nickel–Cadmium Cells,* by W. H. Webster and R. T. Foley, The American University, Washington, D.C. 20016. Copies of this report are available from:
   Technology Utilization Officer
   Goddard Space Flight Center
   Greenbelt, Maryland 20771
   Reference: B67-10614

Patent status:

No patent action is contemplated by NASA.

Source: W. H. Webster and R. T. Foley
of The American University
under contract to
Goddard Space Flight Center
(GSC-10003)

Category 01

This document was prepared under the sponsorship of the National Aeronautics and Space Administration. Neither the United States Government nor any person acting on behalf of the United States Government assumes any liability resulting from the use of the information contained in this document, or warrants that such use will be free from privately owned rights.

NASA TECH BRIEF

NASA Tech Briefs are issued to summarize specific innovations derived from the U.S. space program, to encourage their commercial application. Copies are available to the public at 15 cents each from the Clearinghouse for Federal Scientific and Technical Information, Springfield, Virginia 22151.

Improved Calorimeter Provides Accurate Thermal Measurements of Space Batteries

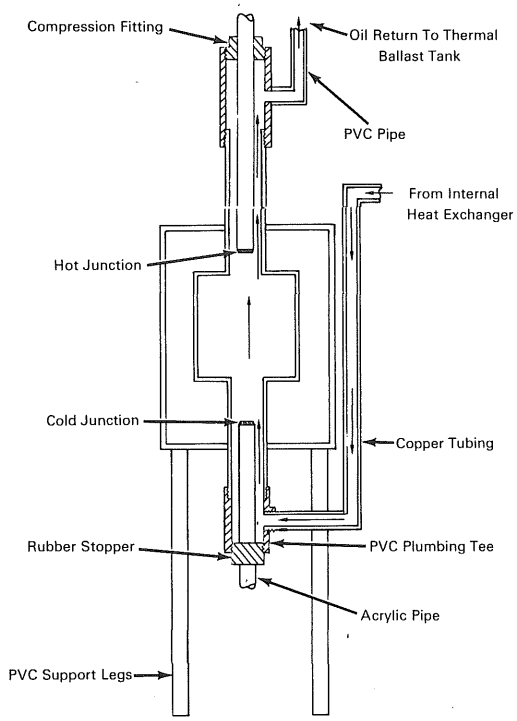

CALORIMETER AND AIR JACKET (≈1/4 Scale)

The problem:

To design and construct a highly accurate calorimeter for measuring the thermal characteristics of space batteries undergoing typical orbital cycling. Over 200 existing designs were analyzed, but none were particularly suited for the desired measurement.

The solution:

An isothermal continuous flow calorimeter was developed and calibrated from 0.10 to 1.00 watt, the thermal output range characteristic of nickel–cadmium space batteries. The thermal response was found to be linear in this range and the instrument was sensitive to 0.01 watt. This is 28 times as sensitive as calorimeters previously used. Temperature changes of 0.00096°C are detectable.

How it's done:

The improved continuous flow calorimeter was constructed of available components but incorporated the

(continued overleaf)

This document was prepared under the sponsorship of the National Aeronautics and Space Administration. Neither the United States Government nor any person acting on behalf of the United States Government assumes any liability resulting from the use of the information contained in this document, or warrants that such use will be free from privately owned rights.

following modifications:

(a) The direction of liquid flow through the calorimeter is reversed. The oil enters at the bottom of the calorimeter where it is sensed by the cold junction of the thermopile. It then passes over the heat generating source and exits at the top of the calorimeter where the hot junction thermopile is positioned.

(b) The number of copper–constantan couples in the thermopile is increased from 20 to 25, increasing its sensitivity and allowing for detection of a 0.00096°C temperature difference.

(c) The junctions of the thermopile are positioned in the center of the flow stream in a 0.75 inch diameter adjustable acrylic pipe.

(d) The internal diameter of the exit pipe at the top of the calorimeter is reduced from 2 inches to 1.5 inches, making it the same size as the entrance pipe at the bottom of the calorimeter.

(e) A special Lucite fixture holds the battery and calibration heater in exact position in the calorimeter.

(f) Cast iron pipes were replaced by polyvinyl chloride pipes to eliminate any byproducts of corrosion.

(g) The sensitivity of measurement was increased by using a lightweight hydrocarbon oil with a heat capacity lower than water.

The calorimeter is large enough that the heat generating device and calibration heater do not impede liquid flow or contact the walls, yet it is small enough to maintain essentially isothermal conditions. The calorimeter is fabricated from 316 stainless steel in the form of a right circular cylinder with a volume of 107.3 cubic inches.

Note:

Additional details are contained in *Research into Fundamental Phenomena Associated with Spacecraft Electrochemical Devices—Calorimetry of Nickel–Cadmium Cells,* by W. H. Webster and R. T. Foley, The American University, Washington, D.C. 20016. Copies of this report are available from:

Technology Utilization Officer
Goddard Space Flight Center
Greenbelt, Maryland 20771
Reference: B67-10615

Patent status:

No patent action is contemplated by NASA.

Source: W. H. Webster and R. T. Foley
of The American University
under contract to
Goddard Space Flight Center
(GSC-10003A)

NASA TECH BRIEF

NASA Tech Briefs are issued to summarize specific innovations derived from the U.S. space program, to encourage their commercial application. Copies are available to the public at 15 cents each from the Clearinghouse for Federal Scientific and Technical Information, Springfield, Virginia 22151.

Ballpoint Probe Gives Optimum Results in Ultrasonic Testing

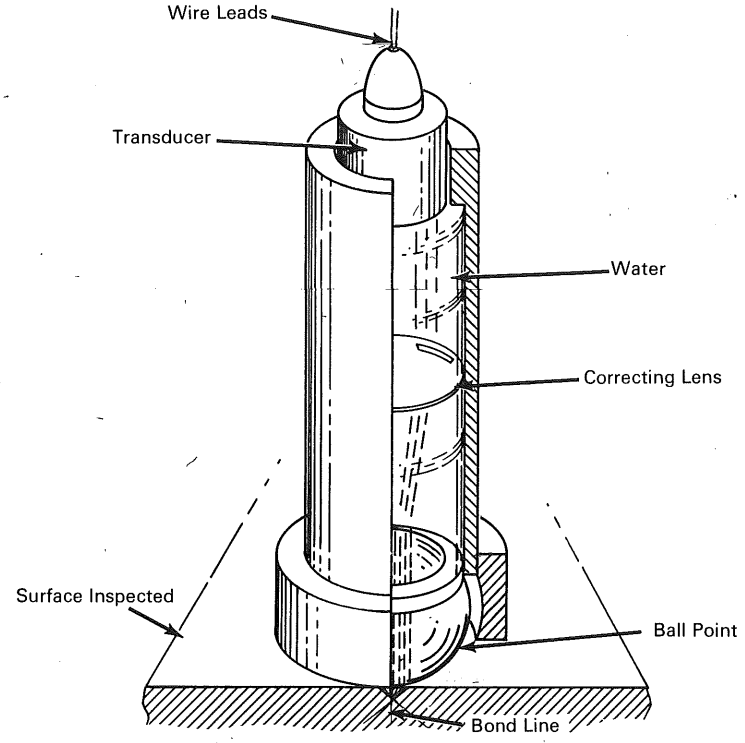

The problem:

To precisely focus an ultrasonic beam on the bond lines of a composite thin face sheet structure when testing for bond integrity. To obtain optimum results possible with ultrasonic testing, the beam must be accurately focused on the bond line. Contact transducers are physically impossible to focus; wheel transducers are bulky, have a fixed focal length, and also require an external couplant spray.

The solution:

A ballpoint-type ultrasonic probe assembly has been conceived which would scan in any direction, eliminate external couplant spray, and focus on the bond line. The probe would combine the features of larger, more complex probes into one small, easily used unit.

How it's done:

The ballpoint probe, shown in the figure, consists of a transducer, water as a couplant, a correcting lens, and a ballpoint contact.

During ultrasonic tests, the ball point is carefully placed on the bond line. The ultrasonic beam is then focused by varying the distance between the correcting lens and the transducer face (varying the focal point).

The external couplant spray is not required as the ball applies its own self-contained couplant, which

(continued overleaf)

This document was prepared under the sponsorship of the National Aeronautics and Space Administration. Neither the United States Government nor any person acting on behalf of the United States Government assumes any liability resulting from the use of the information contained in this document, or warrants that such use will be free from privately owned rights.

flows around the edges of the ball. The scan motion can be in any direction by action of the rotating ball.

Note:

This development is in conceptual stage only and, as of date of publication of this Tech Brief, neither a model nor prototype has been constructed.

Patent status:

No patent action is contemplated by NASA.

Source: R. E. Melton
of Spaco Inc.
under contract to
Marshall Space Flight Center
(MFS-13590)

NASA TECH BRIEF

NASA Tech Briefs are issued to summarize specific innovations derived from the U.S. space program, to encourage their commercial application. Copies are available to the public at 15 cents each from the Clearinghouse for Federal Scientific and Technical Information, Springfield, Virginia 22151.

Temperature-Stabilized, Triggerable Microelectronic Astable Multivibrator Starts Reliably

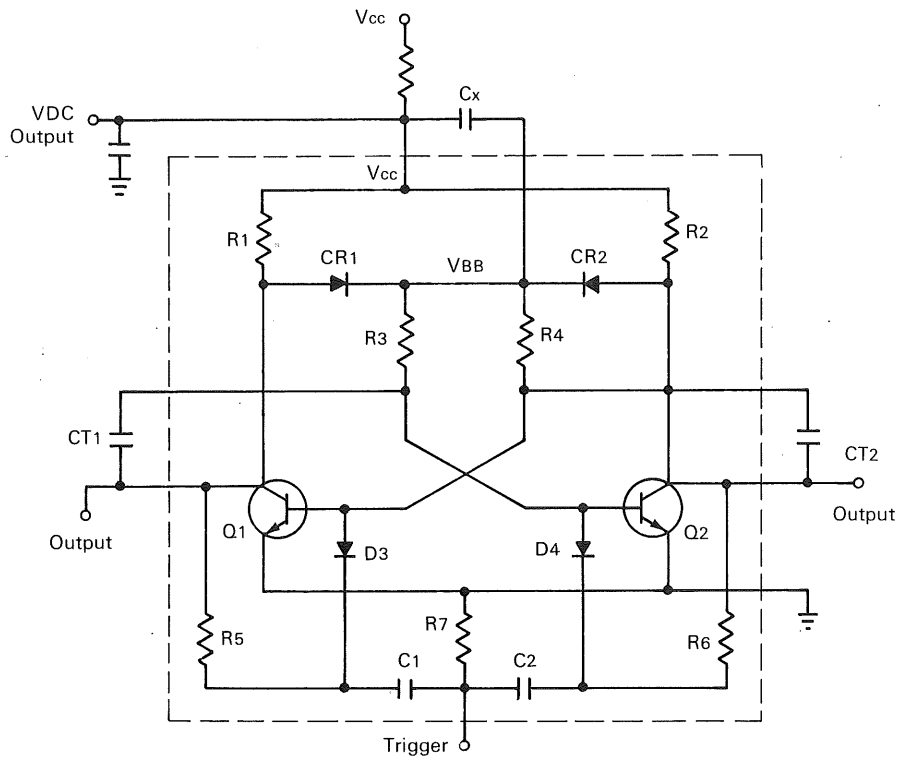

The problem:

To design an ultracompact, low-power astable multivibrator with sure-start characteristics. Slowly applied or steadily increasing supply voltages often fail to trigger a multivibrator by producing "lockup" (both transistors are switched to the ON position). Standard multivibrators also lack frequency/temperature programming flexibility, and thus are not useful in changing thermal environments.

The solution:

Use of multiple chip custom block, MIC construction to fabricate an ultracompact, low-power astable multivibrator. Careful circuit design and the design flexibility provided by materials used in MIC fabrication provide a multivibrator that (1) free runs, eliminating "lockup," (2) is triggerable, pulling into synchronization with an external signal source, and (3) permits design flexibility for controlling the frequency variations with temperature. The multivibrator

(continued overleaf)

This document was prepared under the sponsorship of the National Aeronautics and Space Administration. Neither the United States Government nor any person acting on behalf of the United States Government assumes any liability resulting from the use of the information contained in this document, or warrants that such use will be free from privately owned rights.

starts reliably as approximately one-third of the supply voltage is reached.

How it's done:

The multivibrator, packaged in a 12-pin, TO-8 MIC block, is shown inside the dashed lines of the figure.

The sure-starting circuitry, which assures that the multivibrator free runs and will not lock up when V_{cc} is applied slowly, is essentially the CR1(CR2) in series with R3(R4) dc-coupled parallel (shunt) path around CT1(CT2), timing capacitors. The timing capacitors store and apply equal voltages to the transistor bases. The transistor thresholds are reached simultaneously, producing a "lockup" condition. The dc-coupled parallel paths introduce the nonlinearities of R1, R2, R3, R4, CR1, and CR2, providing a slight initial imbalance to the transistor bases and insuring that one transistor will be biased off while the other conducts.

The synchronization feature is provided by R5(R6), C1(C2), and D3(D4) as the hybrid triggering circuit for Q1(Q2). C1 differentiates the incoming square-wave signal, while D3 conducts only during negative cycles to turn off Q1. R6, C2, and D4 serve the differentiating, steering, and blocking function for the Q2 side.

The multivibrator period vs temperature performance can be controlled to yield low thermally-caused variations, or an increase or decrease in period with increased temperature. This feature is controlled with proper selection of the timing resistor and capacitor temperature coefficients (sign and magnitude). For example: diffused resistors have a large (+) T_c; thin film resistors, a small (−) T_c; glass dielectric capacitors, a small (+) T_c; and ceramic disk capacitors, a large (−) T_c.

Using a discrete circuit as the control, the frequency variations vs temperature were compared for various resistors at −55° and +125°C. The frequency variation for a discrete circuit with mica timing capacitors is +7% at 125°C. In comparison, for boron-diffused resistors in a MIC, together with low or negative temperature coefficient timing capacitors, the variation is from −17% at −55°C to +4% at 125°C. A multiple chip circuit version using anodized tantalum thin film resistors gave −15% at −55°C and +33% at 125°C with glass capacitors and −20% and +48% with ceramic dielectric capacitors. With a monolithic diffused resistor circuit using negative-temperature-coefficient ceramic dielectric capacitors, the minimum variation was obtained, −2% at −55°C and +4% at 125°C.

Notes:

1. All resistors except R3 and R4 can have 20% tolerances; however, R3 and R4 must be matched to within ±10%.
2. Inquiries concerning this invention may be directed to:

   Technology Utilization Officer
   Manned Spacecraft Center
   Houston, Texas 77058
   Reference: B67-10624

Patent status:

Inquiries about obtaining rights for the commercial use of this invention may be made to NASA, Code GP, Washington, D.C. 20546.

Source: W. J. Stebbins
of Westinghouse Electric Corporation
under contract to
Manned Spacecraft Center
(MSC-1173)

AEC-NASA TECH BRIEF

AEC-NASA Tech Briefs describe innovations resulting from the research and development program of the U.S. AEC or from AEC-NASA interagency efforts. They are issued to encourage commercial application. Tech Briefs are published by NASA and may be purchased, at 15 cents each, from the Clearinghouse for Federal Scientific and Technical Information, Springfield, Virginia 22151.

Electronic Skewing Circuit Monitors Exact Position of Object Underwater

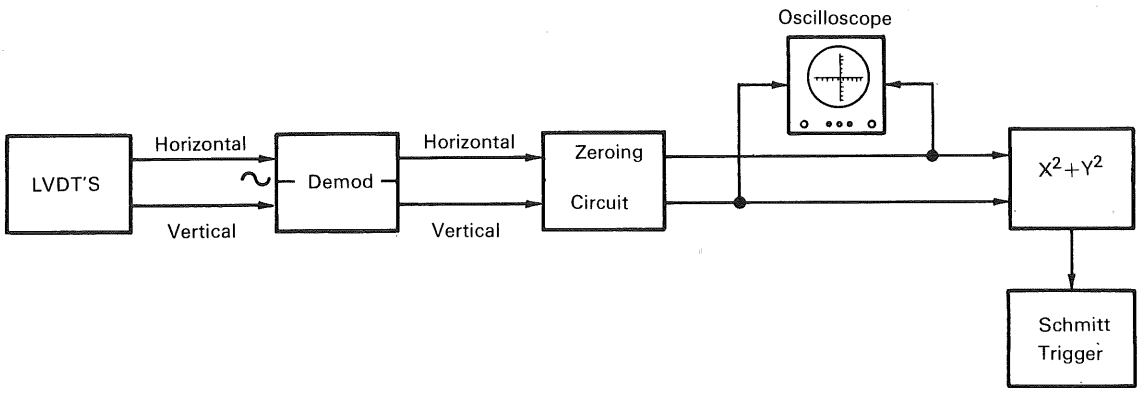

The problem:

A long cylindrical capsule is remotely positioned underwater into a cylindrical tube of slightly larger inside diameter than the capsule. The capsule must be guided through a seal and into a tube so that it does not make contact with the tube wall. A device is necessary to remotely monitor the capsule to determine its exact radial position; also it is necessary to automatically stop the positioning if the capsule becomes misaligned.

The solution:

A linear variable differential transformer (LVDT) electronic skewing circuit that detects movement of the capsule from a reference point and provides a continuous signal that is monitored on an oscilloscope.

How it's done:

Two linear variable differential transformers mounted at the insertion end of the tube are used with demodulators to provide X and Y position signals, the voltages of which are proportional to the change in distance from a predetermined reference point. The horizontal and vertical signals are produced as the capsule moves radially from the reference. These signals are fed through a zeroing circuit to the X and Y inputs of an oscilloscope. The vector result of the horizontal and vertical components of the capsule movement then appears on the scope face as a dot which shows the exact position of the capsule within the reactor. The zeroing circuit is used merely to establish the reference position of the dot during calibration.

A standard analog four-quadrant root-mean-squared circuit combines the X and Y signals to produce the vector output if needed. A Schmitt trigger device is activated if movement of the capsule varies by more than a predetermined amount. The trigger output shuts off the drive system until the reason for the variation can be determined and a correction made.

Notes:

1. The system provides x^2 and y^2 which is compared against r^2. The Schmitt alarm is set to trigger at a value slightly less than r^2 of the tube.

(continued overleaf)

This document was prepared under the sponsorship of the Atomic Energy Commission and/or the National Aeronautics and Space Administration. Neither the United States Government nor any person acting on behalf of the United States Government assumes any liability resulting from the use of the information contained in this document, or warrants that the use of any information, apparatus, method, or process disclosed in this document may not infringe privately owned rights.

2. This technique provides a variety of remote measuring capabilities in addition to the underwater application.
3. A radial positioning accuracy of 0.005 inch has been achieved for a capsule whose O.D. was 8.5 inches ±.02 and a tube whose I.D. was 9.00 inches.
4. Inquiries concerning this innovation may be directed to:

   Technology Utilization Officer
   AEC–NASA Space Nuclear Propulsion Office
   U.S. Atomic Energy Commission
   Washington, D.C. 20545
   Reference: B67-10629

Patent status:

No patent action is contemplated by AEC or NASA.

Source: R. Roller and N. Yaroshuk
of Westinghouse Astronuclear Laboratory
under contract to
AEC–NASA Space Nuclear Propulsion Office

(NUC-10146)

NASA TECH BRIEF

NASA Tech Briefs are issued to summarize specific innovations derived from the U.S. space program, to encourage their commercial application. Copies are available to the public at 15 cents each from the Clearinghouse for Federal Scientific and Technical Information, Springfield, Virginia 22151.

Connector Shorting Cap Provides Pin Alignment, Inspection, and Stray Voltage Protection

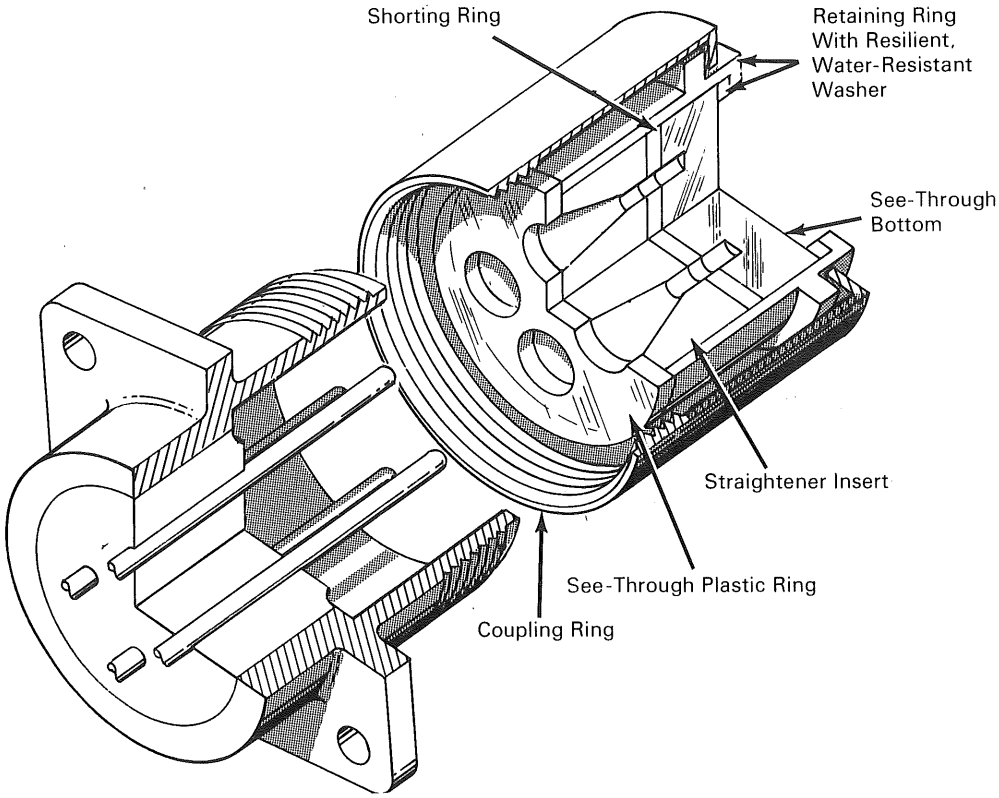

The problem:

To design an electrical connector cap which provides pin alignment, protection from stray voltages, and inspection capabilities. Existing methods use simple slip-on plastic covers or shorting caps, but these covers do not compensate for pin misalignment.

The solution:

An electrical shorting cap, with a teflon straightener insert and a clear plastic bottom, provides physical and electrical protection to the connector pins. A pin alignment or straightener insert is built in to overcome any problems with bent or misaligned pins. A see-through bottom allows for inspection of the presence and condition of the pins.

How it's done:

The connector shorting cap consists of a clear plastic front plate attached to a teflon straightener insert. A shorting plate and a second clear plastic plate are attached to the straightener bottom. The mating holes, for the connector pins, expanded at

(continued overleaf)

This document was prepared under the sponsorship of the National Aeronautics and Space Administration. Neither the United States Government nor any person acting on behalf of the United States Government assumes any liability resulting from the use of the information contained in this document, or warrants that such use will be free from privately owned rights.

the mouth to permit entry of bent pins, extend through the front plate, teflon insert, and shorting plate, terminating in the clear plastic bottom. After being placed on the connector, the cap is secured by a coupling ring which screws onto the connector, forcing the pins into the mating holes.

Notes:

1. If moisture in the connector would pose a frequent problem, a humidity indicator can easily be incorporated in the cap design.
2. This connector could have widespread industrial applications, in particular with explosives such as hot-wire initiators.
3. This development is in conceptual stage only, and, as of date of publication of this Tech Brief, neither a model nor prototype has been constructed.

Patent status:

No patent action is contemplated by NASA.

Source: K. Warming and G. A. Peters
of North American Aviation, Inc.
under contract to
Marshall Space Flight Center
(MFS-13111)

NASA TECH BRIEF

NASA Tech Briefs are issued to summarize specific innovations derived from the U.S. space program, to encourage their commercial application. Copies are available to the public at 15 cents each from the Clearinghouse for Federal Scientific and Technical Information, Springfield, Virginia 22151.

Hydraulic Servo System Increases Accuracy in Fatigue Testing

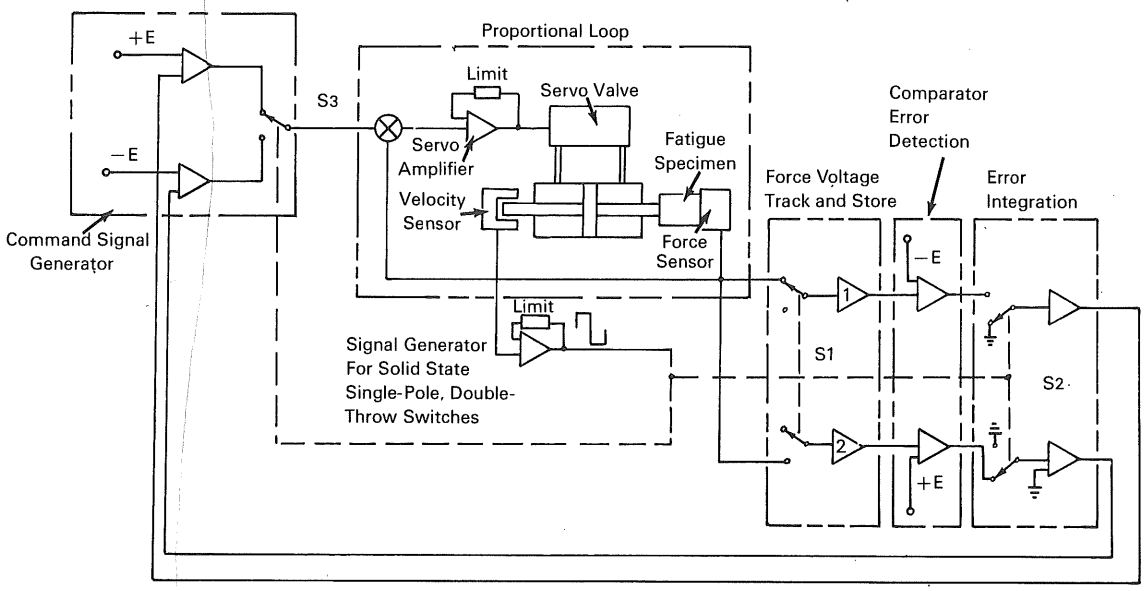

HIGH FREQUENCY PRECISION CYCLIC LOADING SYSTEM

The problem:

To increase accuracy in applying fatigue loading to a specimen under test. The conventional hydraulic proportional loop loading system has a closed loop gain near the ultimate to allow the use of a minimum-size servo valve for high frequency response. Large overshoot and cyclic effects caused by this high gain are eliminated by causing the system command to change levels whenever the velocity changes sign. Manual adjustment of the command level is then required to achieve the desired peak forces. Such a system exhibits relatively large force errors for small changes in system gain, component drift, and changes in test specimen characteristics.

The solution:

An error sensing electronic control loop, coupled to the hydraulic proportional closed loop cyclic force generator, which provides an accurately controlled peak force to the specimen. The error sensing loop maintains an accuracy of 0.1% at the peak force points, thereby eliminating manual adjustment of the command levels.

How it's done:

The fatigue loading system, shown in the diagram, consists of a proportional loop hydraulic system and an error sensing electronic control loop.

The proportional loop consists of a servo amplifier with a limit control, a servo valve which drives a

(continued overleaf)

This document was prepared under the sponsorship of the National Aeronautics and Space Administration. Neither the United States Government nor any person acting on behalf of the United States Government assumes any liability resulting from the use of the information contained in this document, or warrants that such use will be free from privately owned rights.

piston, a velocity sensor, a force sensor, and the fatigue specimen. Frequency control is obtained by setting the limits on the servo amplifier. This is the normal assembly used for fatigue loading of a specimen.

To increase the accuracy of the system, an error-sensing electronic control loop is added to the proportional loop. This control loop consists of a signal generator, a force voltage tracker and storer, an error detection comparator, an error integrator, SPDT switches, and a command signal generator.

The electronic error sensor tracks and stores the force sensor's output voltage to the point where the velocity changes sign, i.e., the point of maximum force. The stored output voltages are then compared with the desired command reference voltages in the error detection comparator. An error signal generated for each peak is integrated and added to the appropriate command voltage level, and the composite command signal is fed to the proportional loop hydraulic system.

The velocity sensor of the proportional loop system triggers the signal generator which drives the SPDT switches. These switches, S_1 and S_2, appropriately channel the inputs and outputs of the error sensing electronic control loop to achieve proper feedback voltages, S_3, into the proportional loop.

The entire loading system is rapidly convergent, and continuously strives to drive the system error to, and maintain it at zero.

Notes:

1. The system was developed for specimen testing requiring dynamic forces of ±5000 pounds at a frequency of 50 Hz.
2. Inquiries concerning this invention may be directed to:

   Technology Utilization Officer
   Langley Research Center
   Langley Station
   Hampton, Virginia 23365
   Reference: B67-10637

Patent status:

Inquiries about obtaining rights for the commercial use of this invention may be made to NASA, Code GP, Washington, D.C. 20546.

Source: G. V. Dixon and K. S. Kibler
(LAR-217)

NASA TECH BRIEF

NASA Tech Briefs are issued to summarize specific innovations derived from the U.S. space program, to encourage their commercial application. Copies are available to the public at 15 cents each from the Clearinghouse for Federal Scientific and Technical Information, Springfield, Virginia 22151.

Highly Stable Microwave Delay Line

The problem:

A need existed to determine the short-term stability of the hydrogen maser frequency standards used in the NASA deep space network. For this determination a highly stable microwave delay line was required. Commercial time delay devices covering the microwave spectrum do not have the necessary stability.

The solution:

A TWM (traveling wave maser) comb structure that serves as a highly stable delay line. Cryogenic cooling is used to minimize signal attenuation and thermal noise.

The comb structures fabricated in approximately 1-meter lengths, are cooled to 4.2°K. With the inherent slowing factors of 200 to 300, such a comb structure provides a nominal delay of a few microseconds. The comb structure is optimized for use as a delay line by making the gap width between adjacent resonant elements as large as practicable.

Notes:

1. With conventional manufacturing techniques, a few microseconds is the practical limit of delay attainable with the TWM comb structure. For a millisecond delay line, 3×10^5 resonant elements (with a delay of 3×10^{-9} second per element) would be required. To meet the dimensional requirements for such a delay line would require special machining techniques.
2. Inquiries concerning this development may be directed to:

   Technology Utilization Officer
   NASA Pasadena Office
   4800 Oak Grove Drive
   Pasadena, California 91103
   Reference: B67-10642

Patent status:

No patent action is contemplated by NASA.

Source: Walter H. Higa
Jet Propulsion Laboratory
(NPO-09828)

Category 01

This document was prepared under the sponsorship of the National Aeronautics and Space Administration. Neither the United States Government nor any person acting on behalf of the United States Government assumes any liability resulting from the use of the information contained in this document, or warrants that such use will be free from privately owned rights.

NASA TECH BRIEF

NASA Tech Briefs are issued to summarize specific innovations derived from the U.S. space program, to encourage their commercial application. Copies are available to the public at 15 cents each from the Clearinghouse for Federal Scientific and Technical Information, Springfield, Virginia 22151.

Concept for Automatic Doppler Compensation in Two-Way Communication Systems

In two-way communication systems where the relative velocity between the two ends of the communication link is not zero, there will be a frequency shift proportional to the relative velocity and to the frequency used for the communication link (Doppler). In many cases, this frequency shift may be large compared to the bandwidth of the data to be transmitted over the links. In conventional communication, either the receiver bandwidth is widened to accommodate this shift plus the data bandwidth, or a technique is used to tune out this frequency shift. This last might be done manually by a receiver operator, or it may be accomplished automatically, called Automatic Frequency Control (AFC).

The AFC technique is very useful for automatic communication systems, but it requires that both ends of the communication system "lockup" before any data may be transferred. The time required for this lockup varies with system design. For many systems this is of no significance, but for the case where one station (master) rapidly interrogates many other stations (remote stations), the lockup time is usually intolerable on the return link from the remote to the master station. This results from the fact that the master station usually is always transmitting and all remote stations within range will have time to acquire and lockup before they are interrogated by the master station. However in the general case, each remote station may be moving at a different relative velocity to the master and thus the master must either search for each reply or else it must have a wide enough bandwidth to accommodate each reply plus the maximum Doppler.

The operation of the two-way system is as follows. The master station radiates a carrier which is slowly swept in frequency over a suitable range. The remote stations are tuned to a nominal frequency and when the swept transmitted frequency plus the Doppler shift equals this nominal frequency, the remote station activates an Automatic Frequency Control (AFC) circuit. This circuit then follows the frequency sweep of the master plus the Doppler due to the relative motion between the master and remote station. AFC is achieved by varying a local oscillator in the remote receiver such that the received signal falls at the center of a frequency discriminator.

An automatic Doppler correction is derived from the AFC system and applied to the reply link such that the master receiver may be fixed tuned and requires neither a time consuming frequency search for the reply nor an excessive bandwidth to accommodate the Doppler.

The master station might be an airplane control tower communicating to automatic readout devices located on airplanes flying in the area. It could also be located in a satellite and be interrogating remote stations located on the ground, floating in the sea, suspended from balloons, flying in airplanes or in another satellite. The automatic Doppler compensation is applicable to any other system where one or both stations are moving, which gives rise to a Doppler frequency shift.

Notes:

1. This development is in conceptual stage only, and as of date of publication of this Tech Brief, neither a model nor prototype has been constructed.

(continued overleaf)

This document was prepared under the sponsorship of the National Aeronautics and Space Administration. Neither the United States Government nor any person acting on behalf of the United States Government assumes any liability resulting from the use of the information contained in this document, or warrants that such use will be free from privately owned rights.

2. Inquiries concerning this invention may be directed to:

Technology Utilization Officer
Goddard Space Flight Center
Greenbelt, Maryland 20771
Reference: B67-10643

Patent status:

Inquiries about obtaining rights for the commercial use of this invention may be made to NASA, Code GP, Washington, D.C. 20546.

Source: Ronald M. Muller
(GSC-10213)

NASA TECH BRIEF

NASA Tech Briefs are issued to summarize specific innovations derived from the U.S. space program, to encourage their commercial application. Copies are available to the public at 15 cents each from the Clearinghouse for Federal Scientific and Technical Information, Springfield, Virginia 22151.

Improved Magnetic Tape Recorder

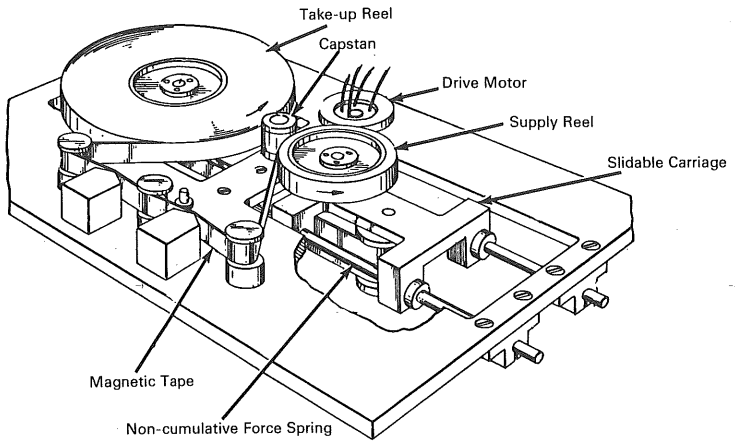

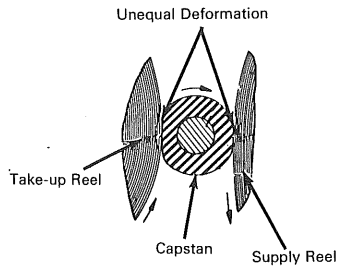

A magnetic tape recorder, which has been designed, is of simple, rugged construction and operates with relatively little power.

Conventional direct drive mechanisms for magnetic tape recorders incorporate a friction brake for the supply reel, which tends to increase power consumption and is subject to failure due to wear and severe environmental conditions. In alternative designs, endless belts employed to avoid friction braking of the supply reel are subject to fatigue failure and nonuniform strains along their lengths, which result in nonuniform driving of the reels.

The new tape recorder design employs a single capstan for simultaneously driving the supply and take-up reels in such a manner that the tape passing between the reels is kept under a predetermined constant tension. This recorder operates with little power and is sufficiently rugged to withstand the severe stresses encountered in high-altitude balloon flight tests.

The capstan has a resilient, deformable cylindrical drive surface (such as rubber) which directly couples and simultaneously drives the supply and take-up reels by frictional surface engagement with the outer layer of tape carried on the periphery of each reel. The reels are supported on slidable carriages (carriage for take-up reel not visible in illustration). Non-cumulative force springs (only one of two visible in illustration) control the movement of the carriages with respect to the capstan. The first non-cumulative force spring (illustrated) directly couples the two carriages to maintain the tape reels in driven engagement with the capstan, even if unbalancing forces are encountered during recorder operation. The second spring maintains a greater contact force between the capstan and the tape carried on the take-up reel than on the supply reel, resulting in the unequal deformation of the capstan surface shown in the auxiliary view. This unequal deformation results in a differential in speed between the two reels so that the tape transferred to the take-up reel is subjected to a predetermined constant tension. Power consumption is reduced because of the absence of a conventional friction brake for the supply reel.

(continued overleaf)

This document was prepared under the sponsorship of the National Aeronautics and Space Administration. Neither the United States Government nor any person acting on behalf of the United States Government assumes any liability resulting from the use of the information contained in this document, or warrants that such use will be free from privately owned rights.

Notes:

1. By providing additional force springs for each tape reel with a means to selectively disconnect the springs, a machine having both recording and playback capabilities will be obtained.
2. Inquiries concerning this invention may be directed to:

   Technology Utilization Officer
   Goddard Space Flight Center
   Greenbelt, Maryland 20771
   Reference: B67-10646

Patent status:

Inquiries about obtaining rights for the commercial use of this invention may be made to NASA, Code GP, Washington, D.C. 20546.

Source: Paul W. Uber
(XGS-08259)

NASA TECH BRIEF

NASA Tech Briefs are issued to summarize specific innovations derived from the U.S. space program, to encourage their commercial application. Copies are available to the public at 15 cents each from the Clearinghouse for Federal Scientific and Technical Information, Springfield, Virginia 22151.

Adaptive Control Circuit Prevents Amplifier Saturation

A low-power, low-torque suspension system under development for an electric vacuum gyro required push–pull output amplifiers that would remain unsaturated for all possible rotor displacements from center. Although voltage-controlled variable reactors would, in principle, permit operation at high amplifier efficiencies under all circumstances, previous experience had indicated that these reactors cannot be made to respond rapidly enough without themselves consuming as much power in the bias current circuits as they save in the main amplifiers. The problem was overcome by an adaptive control circuit that senses how near the output amplifiers are to saturation and sets the B voltage in such a way as to keep them just clear of saturation.

Note:

Inquiries concerning this circuit may be directed to:

Technology Utilization Officer
Electronics Research Center
575 Technology Square
Cambridge, Massachusetts 02139
Reference: B67-10648

Patent status:

Inquiries about obtaining rights for the commercial use of this invention may be made to NASA, Code GP, Washington, D.C. 20546.

Source: Arnold J. Nordsieck
of General Motors Corporation
under contract to
Electronics Research Center
(ERC-10026)

Category 01

This document was prepared under the sponsorship of the National Aeronautics and Space Administration. Neither the United States Government nor any person acting on behalf of the United States Government assumes any liability resulting from the use of the information contained in this document, or warrants that such use will be free from privately owned rights.

NASA TECH BRIEF

NASA Tech Briefs are issued to summarize specific innovations derived from the U.S. space program, to encourage their commercial application. Copies are available to the public at 15 cents each from the Clearinghouse for Federal Scientific and Technical Information, Springfield, Virginia 22151.

Electron Beam Deflected to Determine Focal Point Location

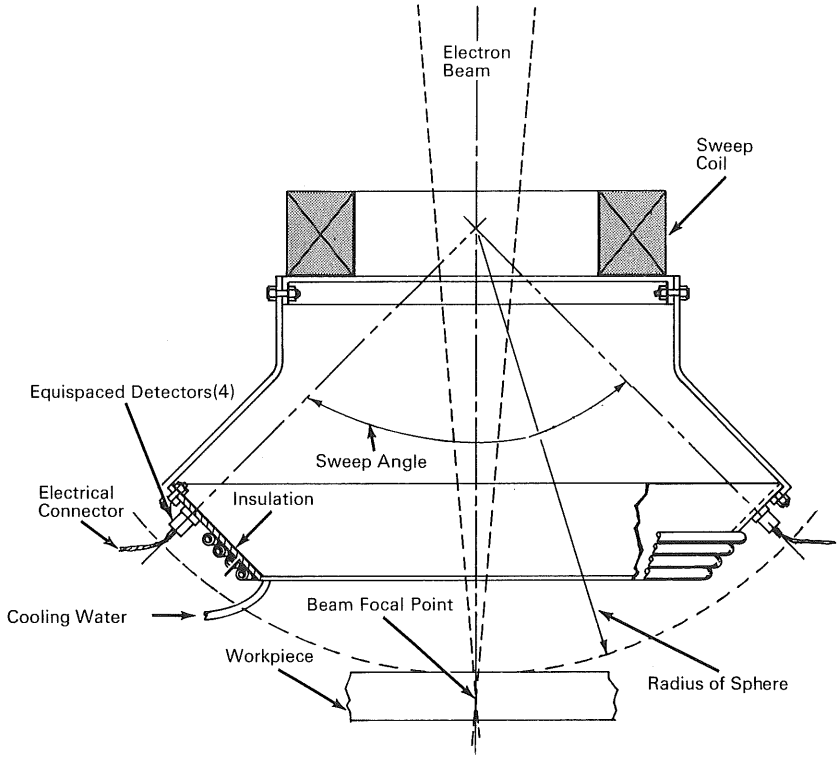

The problem:

To design a system that locates the focal point of an extremely high intensity electron beam. This focal point must be positioned precisely with respect to a workpiece, such as for welding, which is to be subjected to the beam power. It is necessary that the relative position be determined prior to bringing the full intensity of the beam to bear so as to properly weld and prevent damage to the workpiece. During these determinations, power input to the workpiece must be reduced to a safe level.

The solution:

The electron beam is swept and scanned cyclically with deflection coils located beneath a focusing lens. This causes the beam focal point to move in such a way that the locus of its positions will be a spherical surface symmetrical with respect to the beam axis.

Faraday cages or other suitable detectors are symmetrically spaced on a plane normal to the at-rest axis of the electron beam. If the beam raster is symmetrical with respect to the detectors, each detector will collect charge at an equal rate (equal current) when the axis of symmetry of the detectors coincides with the at-rest

(continued overleaf)

This document was prepared under the sponsorship of the National Aeronautics and Space Administration. Neither the United States Government nor any person acting on behalf of the United States Government assumes any liability resulting from the use of the information contained in this document, or warrants that such use will be free from privately owned rights.

axis of the beam. Suitable circuitry is employed to time average the charge collected by each detector. Adjustment of the beam position is made (by steering yokes or other means) until these currents are equal. The unswept focal point will then lie along the axis of symmetry of the detectors. The position of the focal point along this line is set by adjusting the focal point (using the lens or mechanical position) so that the integrated charge reading to the detectors is a maximum.

How it's done:

This locator system causes the focused beam to sweep cyclically in such a fashion as to periodically enter two or more small Faraday cages whose location with respect to a desired point in space is known precisely. The pulsed charges received by the Faraday cages are then integrated, by a suitable circuit, and the beam location is deduced from the relative signals indicated by such detectors. Suitable adjustment is made to equalize these signals by steering the beam with electrostatic, electromagnetic, or mechanical means. When the deflection circuits are then interrupted, the beam axis will be located midway between the detectors.

In a like manner, one can with another sweep direction deduce the unswept beam axis location with respect to another axis in the plane of the detectors. The intersection of these two sweep-direction axes is a point through which the unswept beam axis will fall.

The X–Y position of the beam can thereby be determined if these detectors are located precisely with respect to each other on the corners of a square and the swept beam is steered or directed so that the charges collected by the detectors are equal. The unswept beam axis will then pass perpendicularly through the center of the square. This system uses detectors located at the same spherical surface that the focused beam generates to deduce the location of the focal point along the center axis. The maximum charge flow occurs when the beam is focused on detectors which have small acceptance areas.

Notes:

1. A refinement of this system is to utilize the detectors in an automatic positioning system to control the location of a beam to a specific place. Unbalance signals derived from X, Y, and Z sensors may be utilized to automatically steer the beam focal point to a predetermined position.
2. A related system is described in NASA Tech Brief 67-10650. Inquiries may also be directed to:

   Technology Utilization Officer
   Marshall Space Flight Center
   Huntsville, Alabama 35812
   Reference: B67-10649

Patent status:

Inquiries about obtaining rights for the commercial use of this invention may be made to NASA, Code GP, Washington, D.C. 20546.

Source: R. D. Downing
of General Electric Company
under contract to
Marshall Space Flight Center
(MFS-14107)

NASA TECH BRIEF

NASA Tech Briefs are issued to summarize specific innovations derived from the U.S. space program, to encourage their commercial application. Copies are available to the public at 15 cents each from the Clearinghouse for Federal Scientific and Technical Information, Springfield, Virginia 22151.

Electron Beam Standby Absorber System

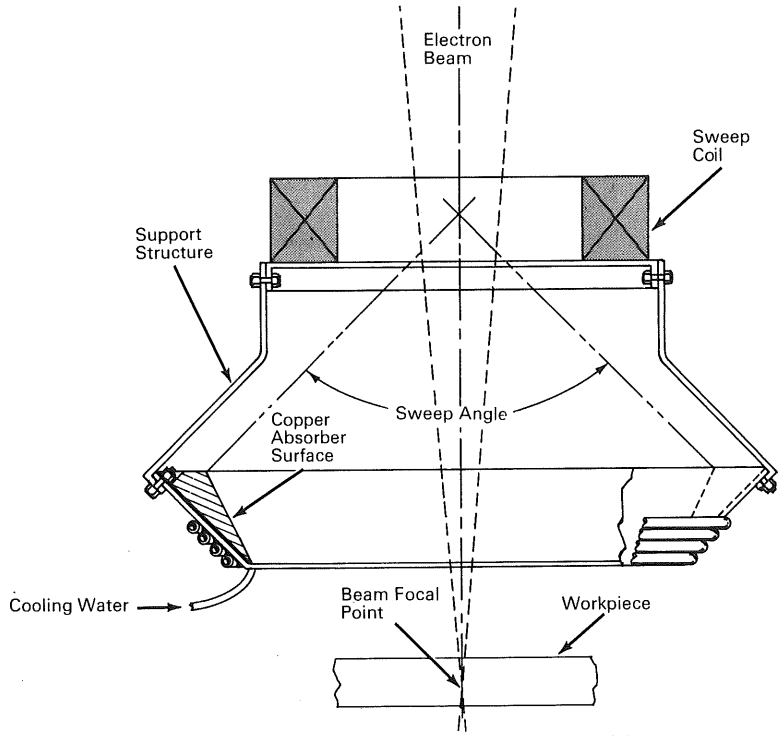

The problem:

While using a swept and scanned beam raster to locate position or measure characteristics of that beam, it is necessary to absorb the energy of the beam in places other than a workpiece which one intends to weld or otherwise process. It is desirable that this energy be absorbed by some means requiring no physical motion of either the absorber or the intended workpiece.

The solution:

Deflectors cause the electron beam to be distributed over an absorber located between the deflectors and the workpiece. A hole in the absorber permits the undeflected beam to pass through the absorber when the deflection is deenergized. The beam passing through this hole, when the deflection is energized, is kept to a minimum power level by deflection rate change.

How it's done:

A water cooled standby absorber is interposed permanently between the deflection components and the beam workpiece. The energy of the beam is dissipated in the absorber. Along the electron beam axis, the time averaged energy density is much lower than at its focal point. This permits the absorption of the full beam power without harm to the absorber surface.

(continued overleaf)

This document was prepared under the sponsorship of the National Aeronautics and Space Administration. Neither the United States Government nor any person acting on behalf of the United States Government assumes any liability resulting from the use of the information contained in this document, or warrants that such use will be free from privately owned rights.

The deflections of the beam at high speed and the distributive nature of the beam raster also aid greatly in making it possible to safely dissipate the beam power in the absorber.

The beam is kept in raster on this absorber during adjustments of the beam parameters. When one wishes to use the beam, the deflection is switched off, causing the beam to move to its undeflected position, passing through the hole in the absorber, to the workpiece. Switching off the beam is done by reversing this process.

Notes:

1. This system permits adjustment of electron beam systems during full power operating conditions.
2. Other configurations of this system are evident, such as off axis absorbers situated on one side of the beam.
3. A related system is described in NASA Tech Brief 67-10649. Inquiries may also be directed to:

   Technology Utilization Officer
   Marshall Space Flight Center
   Huntsville, Alabama 35812
   Reference: B67-10650

Patent status:

Inquiries about obtaining rights for the commercial use of this invention may be made to NASA, Code GP, Washington, D.C. 20546.

Source: R. D. Downing
of General Electric Company
under contract to
Marshall Space Flight Center
(MFS-14108)

NASA TECH BRIEF

NASA Tech Briefs are issued to summarize specific innovations derived from the U.S. space program, to encourage their commercial application. Copies are available to the public at 15 cents each from the Clearinghouse for Federal Scientific and Technical Information, Springfield, Virginia 22151.

Development of Detonation Reaction Engine

A new type of reaction engine has been designed and constructed that operates on the principle of a controlled condensed detonation rather than on the principle of gas expansion. This results in reaction products that are expelled at a much higher velocity than are the gaseous products resulting from a controlled burning as in a conventional engine.

In this reaction type motor the gas products that are expelled from the engine to produce thrust are generated by a condensed detonation reaction rather than by the burning of a propellant as in a conventional type of reaction motor. Reaction type motors, such as rocket engines in current use have generated thrust by burning propellant mixtures in a combustion or thrust chamber and then expelling the gaseous products which result from this combustion through a rocket nozzle. The development of conventional reaction type engines has progressed to a point where it is very difficult to obtain any significant increase in thrust from an engine without resorting to increasing the size of the engine.

The new type reaction engine is constructed of two basic sections consisting of a detonation wave generator section and a condensed detonation reaction section. A controlled shock wave is generated in the wave generator section and this shock wave is directed into the detonation reaction section where a condensed detonation is initiated that results in high density directional reaction products which are expelled from the engine to produce thrust.

The operation of the engine is as follows: Liquid hydrogen and oxygen or any other suitable liquid oxidizer/fuel combination are sprayed into a wave generator chamber and the vapor mixture is exploded by an electric spark. A shock wave is produced within the wave generator chamber and is directed into a detonation reaction chamber where it triggers a condensed detonation of the propellant mixture. Fuel and oxidizer are fed into the detonation reaction chamber at an angle such that an annular zone of fuel and oxidizer mixture is formed. This annular zone is progressively detonated by the shock wave generated in the wave generator chamber. The injection angle of the fuel and oxidizer introduced into the detonation reaction chamber, and the shape of the shock wave from the detonation wave generator chamber is such that a reaction in the detonation reaction chamber is produced which is similar to the reaction caused by detonation of a conventional shaped charge. The gaseous products that result from the detonation of the liquid fuel and oxidizer are squeezed or confined to the area of the annular zone. The temperature, pressure, and velocity of gases obtainable from such a reaction are considerably larger than those obtainable from a controlled burning of propellant in a conventional reaction motor.

Note:

Inquiries concerning this invention may be directed to:

Technology Utilization Officer
Marshall Space Flight Center
Huntsville, Alabama 35812
Reference: B67-10652

Patent status:

Inquiries about obtaining rights for the commercial use of this invention may be made to NASA, Code GP, Washington, D.C. 20546.

Source: O. H. Lange, R. J. Stein, and H. E. Tubbs
(MFS-14020)
Category 01

This document was prepared under the sponsorship of the National Aeronautics and Space Administration. Neither the United States Government nor any person acting on behalf of the United States Government assumes any liability resulting from the use of the information contained in this document, or warrants that such use will be free from privately owned rights.

NASA TECH BRIEF

NASA Tech Briefs are issued to summarize specific innovations derived from the U.S. space program, to encourage their commercial application. Copies are available to the public at 15 cents each from the Clearinghouse for Federal Scientific and Technical Information, Springfield, Virginia 22151.

Low Cost SCR Lamp Driver Indicates Contents of Digital Computer Registers

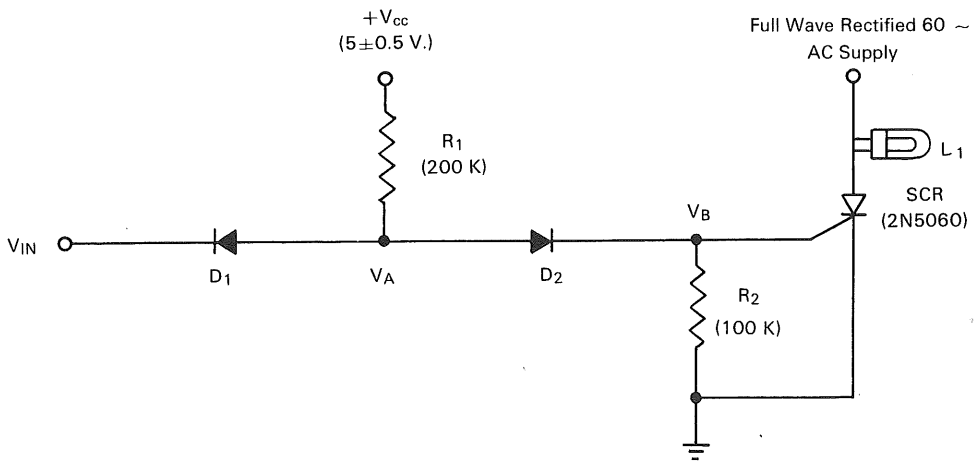

The purpose:

To design an electronic circuit that will provide a visual indication of the state of an electronic digital circuit. Previously, incandescent and neon glow lamps were driven by various transistor and silicon controlled rectifier (SCR) circuits, which undesirably loaded the output of the circuit whose state they were indicating.

The solution:

An electronic circuit that is particularly adapted for use in integrated circuit digital computers where it indicates the contents of the various registers.

How it's done:

Resistor R_1, connected to V_{cc}, acts as a current source injecting about 25μa into node V_A. Assume that V_{IN} is at ground potential. Then the current through R_1 is shunted to ground through D_1 and the gate electrode of the SCR is maintained below its firing potential. In this condition the SCR remains off and the lamp does not light.

If the voltage V_{IN} is slowly increased, then the voltage at node V_A must also increase since D_1 is forward biased by the current flowing through R_1. D_2 becomes forward biased as voltage V_A increases. As a result, voltages V_B (the SCR gate voltage) and V_{IN} are substantially equal. When V_{IN} (and hence V_B) reaches the gate firing potential, the SCR is triggered into conduction and the lamp lights.

Notes:

1. Resistor R_2 is included to shunt gate leakage current to ground. It must be small enough so that the SCR will remain turned off when $V_{IN}=0$ at the highest temperature to be encountered. Resistor R_1 must be sufficiently small so that enough current is available to turn the SCR on at the lowest temperature to be encountered. The values shown are suitable for a +100°C to −50°C temperature range when a typical 2N5060 SCR is used. Diodes D_1 and D_2 may be any computer type silicon diodes. L_1 may be any lamp within the current and voltage ratings of the SCR.

(continued overleaf)

This document was prepared under the sponsorship of the National Aeronautics and Space Administration. Neither the United States Government nor any person acting on behalf of the United States Government assumes any liability resulting from the use of the information contained in this document, or warrants that such use will be free from privately owned rights.

2. Another advantage of this circuit is that the threshold voltage at which visual indication begins is very sharply defined and can be adjusted to suit particular system requirements.
3. Inquiries concerning this circuit may be directed to:

   Technology Utilization Officer
   Goddard Space Flight Center
   Greenbelt, Maryland 20771
   Reference: B67-10656

Patent status:

Inquiries about obtaining rights for the commercial use of this invention may be made to NASA, Code GP, Washington, D.C. 20546.

Source: Rodger A. Cliff

(GSC-10221)

NASA TECH BRIEF

NASA Tech Briefs are issued to summarize specific innovations derived from the U.S. space program, to encourage their commercial application. Copies are available to the public at 15 cents each from the Clearinghouse for Federal Scientific and Technical Information, Springfield, Virginia 22151.

Reflectometer for Receiver Input System

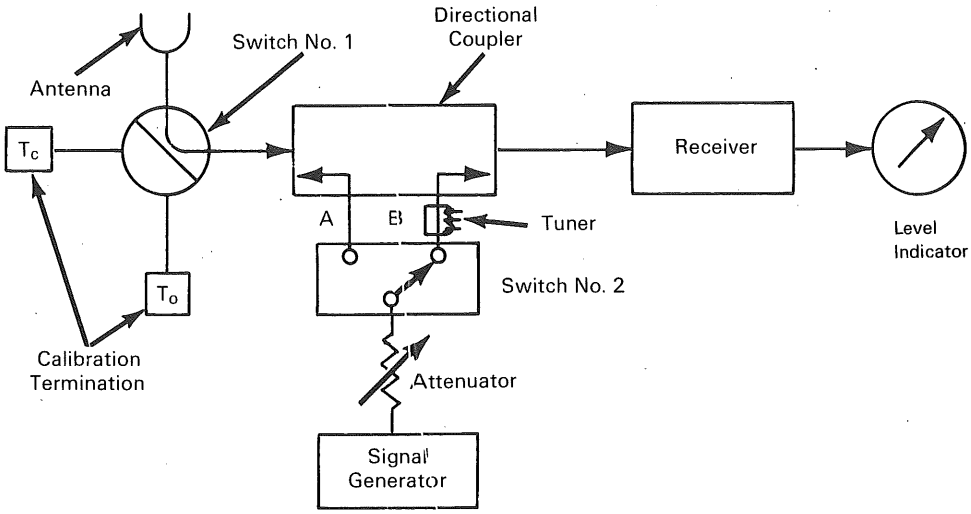

MODIFIED SYSTEM WITH BUILT-IN REFLECTOMETER

The problem:

The application of precision microwave measurement techniques, as in checking the VSWR of devices in a waveguide system, results in time-consuming point-by-point measurements often requiring dismantling of the assembly. Engineering development and calibration of low noise tracking receivers demand a faster, more thorough, and more automatic method of measurement.

The solution:

A reflectometer, normally used as test instrumentation for match measurements, was built into a microwave input system and periodic measurements of match were made a part of the station calibration routine.

How it's done:

The measure of a termination match is given by the signal power reflected from the termination or the degree of match of the antenna or the loads seen by the maser input termination. A perfectly matched termination will reflect no signal while a short will reflect essentially all of the signal. By injecting the signal from the signal generator and attenuator through switch No. 2 and port A of the directional coupler, the signal power is dissipated in one of the three load devices or reflected into the receiver due to improper match. The level of the reflection is indicated by the level indicator. The signal generator attenuator and output level meter are read to obtain the equivalent power of the reflected signal after switch No. 2 connects the signal to the receiver through port B and the level is adjusted to the reference value obtained with the reflection signal.

(continued overleaf)

This document was prepared under the sponsorship of the National Aeronautics and Space Administration. Neither the United States Government nor any person acting on behalf of the United States Government assumes any liability resulting from the use of the information contained in this document, or warrants that such use will be free from privately owned rights.

For highest accuracy it is necessary to tune the reflectometer with the tuner while switch No. 1 is connected into a termination with a known match.

Notes:

1. This invention is presently in use in the JPL Mars Station. It was installed in the S-band receiving system in the feed cone of the 210-ft antenna.
2. This development offers the following advantages:
   a. The impedance match measurements can be made without disconnecting elements of the receiver input system.
   b. Down-time for match measurements is essentially eliminated effecting a substantial savings in receiver maintenance cost.
   c. Match measurements can be made on a routine calibration basis.
   d. The reflectometer acts as a trouble-shooting instrument before and after replacement of components (e.g., waveguide switches).
3. Inquiries concerning this development may be directed to:

   Technology Utilization Officer
   NASA Pasadena Office
   4800 Oak Grove Drive
   Pasadena, California 91103
   Reference: B67-10657

Patent status:

Inquiries about obtaining rights for the commercial use of this invention may be made to NASA, Code GP, Washington, D.C. 20546.

Source: C. T. Stelzried
Jet Propulsion Laboratory
(XNP-10843)

NASA TECH BRIEF

NASA Tech Briefs are issued to summarize specific innovations derived from the U.S. space program, to encourage their commercial application. Copies are available to the public at 15 cents each from the Clearinghouse for Federal Scientific and Technical Information, Springfield, Virginia 22151.

Damages in Rolling Element Bearings May Be Detected Early

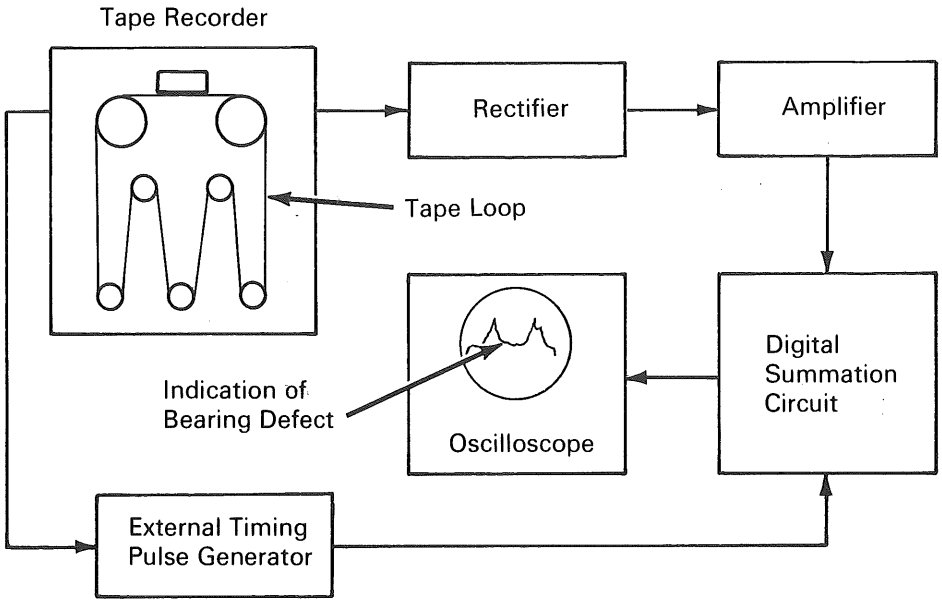

The problem:

In critical machine components, it would be advantageous to have a dependable method for early detection of damage or small defects in rolling element bearings. Such damage or defects, although small, are usually indicators of impending bearing failure.

The solution:

A detection method that operates on the principle that an impact is generated each time a defect in an otherwise smooth surface is in intimate moving contact with another smooth surface. For example, the impact generated every time a ball rolls over a crack or dent in an outer race.

How it's done:

A tape recording is made of vibrations picked up on the housing around the bearing under study. A part of the recorded signal is played back as a tape loop that contains one ON and one OFF order for triggering of an external timing pulse generator. The generator introduces pulses with a time interval T_s. With the tape loop running, pulse generation is started by the ON order and pulses are then generated until the tape loop has completed one revolution when the ON order repeats the sequence. The time interval T_s between pulses is externally varied in accordance with bearing configuration and size plus rotational speed in order to monitor the specific component under investigation. A digital summation circuit, constantly coupled to the played-back, amplified, and rectified vibration signal initiates a sweep cycle each time the pulse generator is triggered. During this sweep cycle the summation circuit memorizes the incoming rectified

(continued overleaf)

This document was prepared under the sponsorship of the National Aeronautics and Space Administration. Neither the United States Government nor any person acting on behalf of the United States Government assumes any liability resulting from the use of the information contained in this document, or warrants that such use will be free from privately owned rights.

vibration signal during a present time interval T, where $T \leq T_s$. Memorizing is accomplished by dividing the T signal interval into 1024 time bits, measuring the average signal level within each bit, and storing the result as 1024 digits in the memory. Because the pulse generator produces pulses at intervals of T_s during the ON order period, the memory cycle is also repeated at each interval T_s. Each memorized set of 1024 digits is added to the previous sets in the digital memory, so the memory always contains the sum of previously memorized signal sections.

A set of peaks in the vibration signal, repeating with time interval T_s, will cause a high number (ones versus zeros) in one or more memory locations, the same for each memory cycle, therefore building up peaks at such locations. Random pulse trains or sequences not related to T_s do not have this effect. Through this detections of peaks accumulated in the summation memory, pulse sequences with the selected time interval T_s (or its multiples) are detected with great accuracy, thus providing the desired analysis information.

Notes:

1. The particular summation circuit used must measure each signal bit many times to be accurate. The ON–OFF orders on the tape loop insure identical repetition of trigger pulses for each tape revolution.
2. This development is in conceptual stage only, and as of date of publication of this Tech Brief, neither a model nor prototype has been constructed.

Patent status:

Inquiries about obtaining rights for the commercial use of this invention may be made to NASA, Code GP, Washington, D.C. 20546.

Source: B. Weichbrodt
of General Electric Company
under contract to
NASA Headquarters
(HQN-10031)

NASA TECH BRIEF

NASA Tech Briefs are issued to summarize specific innovations derived from the U.S. space program, to encourage their commercial application. Copies are available to the public at 15 cents each from the Clearinghouse for Federal Scientific and Technical Information, Springfield, Virginia 22151.

Air Sampler Collects and Protects Minute Particles

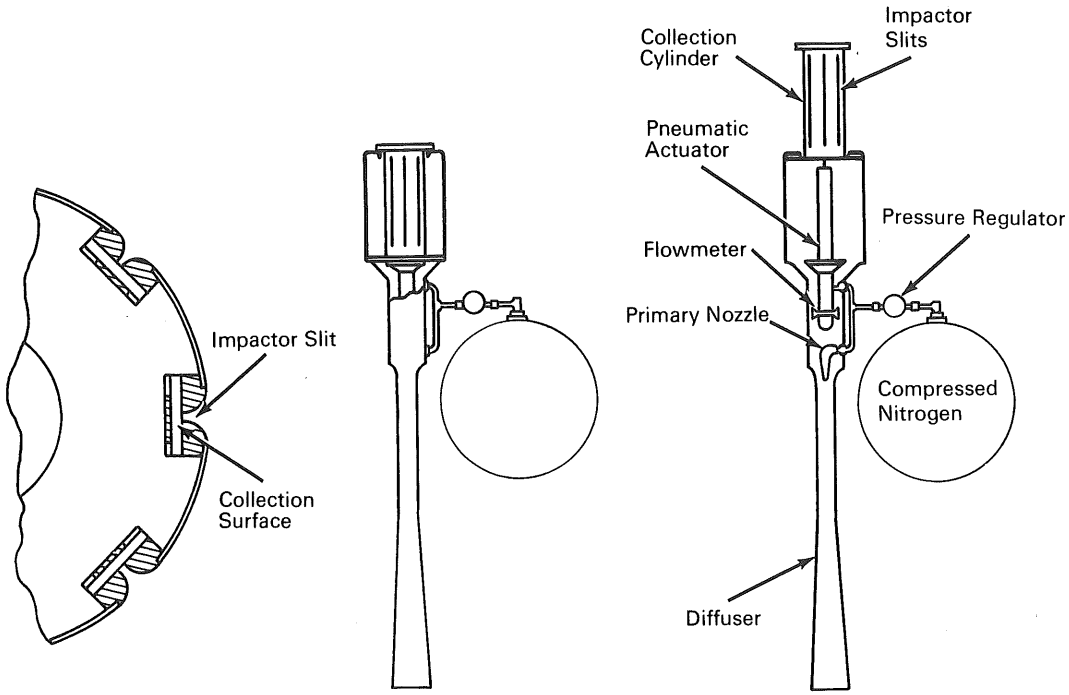

SECTION THROUGH COLLECTION CYLINDER

COLLECTION CYLINDER RETRACTED

COLLECTION CYLINDER EXPOSED

The problem:

To collect and protect samples of particles greater than 0.1 micron in diameter. Such a device should have construction and operational features that would have application in air pollution analysis and in particulate sampling where the environment is hazardous or difficult of access.

The solution:

An air ejector impactor sampler that, in operation, causes impaction of particle-laden air onto several collection surfaces within a collection cylinder. When not operating, the collector cylinder is maintained in a retracted state within a protective envelope.

How it's done:

An air ejector pump composed of a compressed gas source and associated tubing, valve, and flowmeter, simultaneously valves compressed gas to a nozzle in a diffuser and into a pneumatic actuator. Flow of the gas to the pneumatic actuator extends the collection cylinder into an exposed position from its retracted position. Flow of the gas into the venturi entrains the

(continued overleaf)

This document was prepared under the sponsorship of the National Aeronautics and Space Administration. Neither the United States Government nor any person acting on behalf of the United States Government assumes any liability resulting from the use of the information contained in this document, or warrants that such use will be free from privately owned rights.

surrounding air and produces a reduced pressure within the collection cylinder, resulting in air flow through its impactor slits and particulate impaction upon the collection surfaces within. After the air ejector gas is exhausted or turned off, a spring associated with the pneumatic actuator draws the collection cylinder back into the retracted position to protect the collected particles from undesirable contamination.

Notes:

1. Though designed for collection of extraterrestrial dust at high altitudes, this sampler could be used for particle analysis in many earthbound applications.
2. Inquiries concerning this invention may be directed to:

   Technology Utilization Officer
   Headquarters
   National Aeronautics and Space Administration
   Washington, D.C. 20546
   Reference: B67-10661

Patent status:

Inquiries about obtaining rights for the commercial use of this invention may be made to NASA, Code GP, Washington, D.C. 20546.

Source: Rex C. Wood
of Litton Systems, Inc.
under contract to
NASA Headquarters
(HQN-10037)

NASA TECH BRIEF

NASA Tech Briefs are issued to summarize specific innovations derived from the U.S. space program, to encourage their commercial application. Copies are available to the public at 15 cents each from the Clearinghouse for Federal Scientific and Technical Information, Springfield, Virginia 22151.

Phase Plane Displays Detect Incipient Failure in Servo System Testing

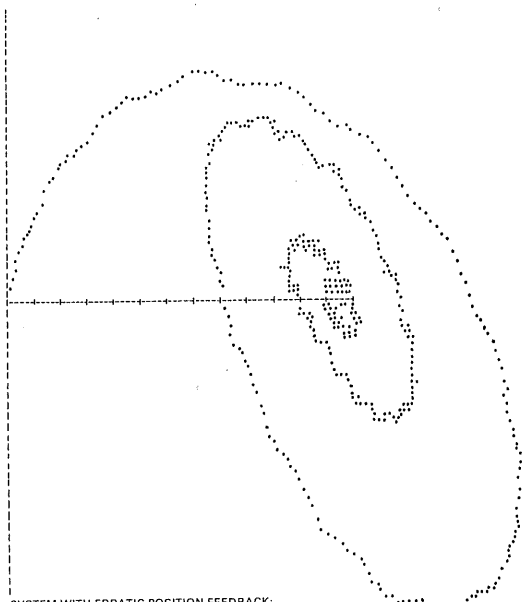

SYSTEM WITH ERRATIC POSITION FEEDBACK: ACCELERATION-PLANE DISPLAY

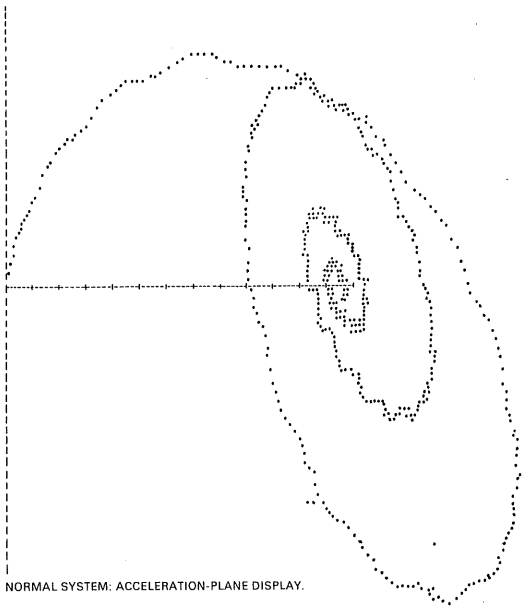

NORMAL SYSTEM: ACCELERATION-PLANE DISPLAY.

The problem:

To develop phase plane displays for incipient failure detection in servo system testing, for use in prelaunch checkout of complex nonlinear servomechanisms. Current methods do not provide adequate information on the existence of marginal conditions, unintentional nonlinearities or anomalies in the servo response. Other recent developments, including computerized analysis of servo responses based on classical servo analytical techniques suffer from a common problem: they assume linearity of the servo under test in order to compute transfer function parameter values from response data. This immediately precludes their use in the checkout of servo systems with known nonlinearities (e.g., Saturn-IVB engine gimbal actuators).

The solution:

A computer based, data conditioning and display technique which enables systems test engineers to identify, on line, unusual or abnormal servo responses more easily than is possible with existing strip chart recorders and meters.

How it's done:

A mathematical model of the Saturn-IVB thrust vector control system actuator is used to generate servo response data. After a set of normal plots, in both the amplitude–time and the phase plane formats, are obtained, degradations are simulated in the model and new responses plotted. These are then compared against their respective normal response plots in order to determine the extent of any improvement in detect-

(continued overleaf)

This document was prepared under the sponsorship of the National Aeronautics and Space Administration. Neither the United States Government nor any person acting on behalf of the United States Government assumes any liability resulting from the use of the information contained in this document, or warrants that such use will be free from privately owned rights.

ing nonnormal or marginal response behavior.

In comparing the two plots, it is readily seen that the general appearance of the acceleration plane plot has undergone the greatest change. Although not illustrated, no essential difference in the pattern of the response in the amplitude–time plots is evident. The gross change in the plot of the system with the erratic position feedback is immediately apparent in the upper section of the curve, which shows the wide separation between the two sections of the spiral.

Notes:

1. The response can be displayed compactly in the time domain on a cathode ray tube.
2. Responses from systems of any complexity, whether linear or nonlinear, can be analyzed with equal facility.
3. Generation of the phase plane displays does not require large scale computing facilities or extensive computer time.
4. A possible industrial application would be the production line testing of servomechanisms.
5. Medical applications might include the diagnostic display of EKG and EEG data.
6. Inquires concerning this invention may be directed to:

   Technology Utilization Officer
   Headquarters
   National Aeronautics and Space Administration
   Washington, D.C. 20546
   Reference: B67-10662

Patent status:

Inquiries about obtaining rights for the commercial use of this invention may be made to NASA, Code GP, Washington, D.C. 20546.

Source: J. G. Wohl and F. J. Affenito
of Dunlap and Associates, Inc.
under contract to
NASA Headquarters
(HQN-10018)

NASA TECH BRIEF

NASA Tech Briefs are issued to summarize specific innovations derived from the U.S. space program, to encourage their commercial application. Copies are available to the public at 15 cents each from the Clearinghouse for Federal Scientific and Technical Information, Springfield, Virginia 22151.

Unique Frequency-Shift-Keyed Demodulation System

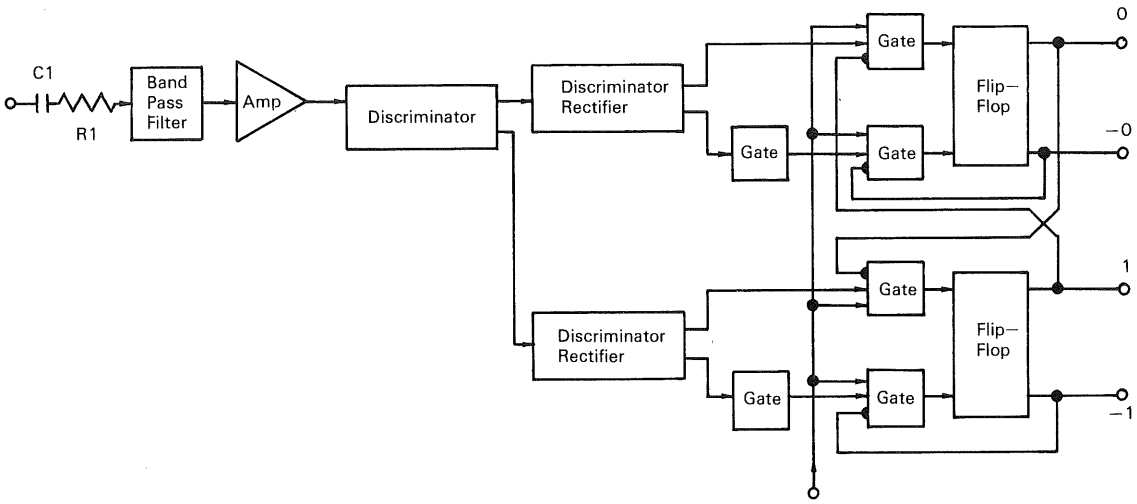

The problem:

In prior frequency-shift-keyed (FSK) demodulators, the incoming signal is fed to a discriminator and the discriminator output summed to produce the conventional "S" curve. This output is applied to the inputs of two Schmitt trigger circuits, one of which is responsive to negative pulses and the other to positive pulses. Thus, the channel for decoding binary ones must differ from that decoding binary zeros. These demodulators also lack a simple and reliable means for rejecting data applied at a frequency greater than the desired. Inaccuracy has also been a disadvantage in this type demodulator.

The solution:

An FSK demodulator in which the discriminator outputs are separate and applied to two identical decoding channels, one decoding binary ones and the other decoding binary zeros. This demodulator rejects data applied to it at any frequency higher than design.

How it's done:

The demodulator provides a frequency discriminator in combination with two decoding channels. The discriminator produces one output in response to a positive shift in frequency and applies it to a channel for decoding binary ones. It produces another output in response to a negative shift in frequency and applies it to a channel for decoding binary zeros.

These two channels are identical; each includes a discriminator rectifier, a flip-flop, and a set of gates responsive to output signals from the discriminator rectifier for selectively setting and resetting the flip-flop. The discriminator rectifier circuit includes a capacitor that must charge and discharge at a predetermined value before the set gate will be conditioned to change the state of the flip-flop. By this arrangement, the capacitor must be recharged before the discriminator rectifier can produce another output signal to condition the set gate. Thus, the channel

(continued overleaf)

This document was prepared under the sponsorship of the National Aeronautics and Space Administration. Neither the United States Government nor any person acting on behalf of the United States Government assumes any liability resulting from the use of the information contained in this document, or warrants that such use will be free from privately owned rights.

rejects data received at a frequency greater than the charge–discharge time of the capacitor.

Notes:

1. This technique should be of general interest for point-to-point data transmission applications.
2. Inquiries concerning this invention may be directed to:

   Technology Utilization Officer
   Goddard Space Flight Center
   Greenbelt, Maryland 20771
   Reference: B67-10668

Patent status:

Inquiries about obtaining rights for the commercial use of this invention may be made to NASA, Code GP, Washington, D.C. 20546.

Source: S. Teitelbaum and Charles Staloff
of RCA
under contract to
Goddard Space Flight Center
(GSC-217)

NASA TECH BRIEF

NASA Tech Briefs are issued to summarize specific innovations derived from the U.S. space program, to encourage their commercial application. Copies are available to the public at 15 cents each from the Clearinghouse for Federal Scientific and Technical Information, Springfield, Virginia 22151.

Ultraminiature Manometer-Tipped Cardiac Catheter

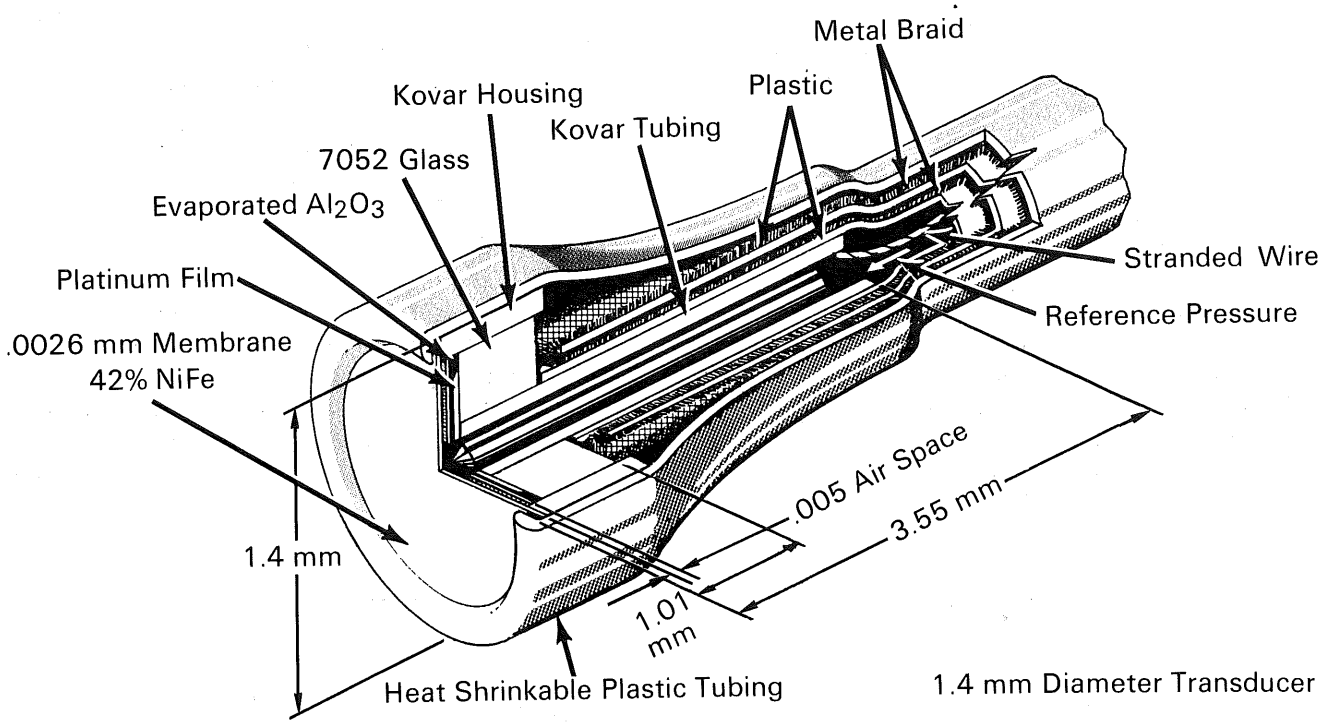

A miniature diaphragm-type capacitance transducer capable of being mounted on the end of a cardiac catheter has been developed for measurement of intravascular pressures. Cells have been developed having diameters of 2.25 mm, 1.4 mm, 1.2 mm and most recently 1.0 mm. These latter cells have been mounted on catheters 100 cm long in order to allow for insertion of the pressure transducer and catheter by percutaneous techniques using standard 17 gage thin wall needles (ID = 1.1 mm) which are routinely used for venous or arterial punctures in humans.

A diagram of the 1.4 mm pressure cell is illustrated. The two plates for the capacitor used for sensing pressure consist of a cell diaphragm (1.4 mm in diameter and 0.0026 mm thick) and a film of platinum fired onto a glass core separated by an air gap of 0.005 mm. The central metal tube in the cell provides an electrical connection to the platinum film and for passage of reference pressure to the capacitor air space. Air passage through the cable is provided by the central plastic tube which may be left open to atmosphere or used for pressure calibrations.

The electronic system connected to the catheter for sensing pressure consists of a capacitance bridge network excited by a 100 KHz crystal oscillator, a low noise transistor amplifier and an appropriate demodulator to produce an analog signal (dc to 10 kc) for a recorder or display on an oscilloscope. The natural frequency of the 1.4 mm cell in air is 82 KHz. The cell is linear within 1% from 0 to 200 mm Hg with

(continued overleaf)

This document was prepared under the sponsorship of the National Aeronautics and Space Administration. Neither the United States Government nor any person acting on behalf of the United States Government assumes any liability resulting from the use of the information contained in this document, or warrants that such use will be free from privately owned rights.

a resolution of 1 mm Hg. Its temperature effect is slight with a zero shift of 0.15% FS/°C (25.5° to 44°C) and negligible sensitivity shift.

Units have been used to catheterize the left ventricle via the femoral and carotid arteries in dogs. A typical arterial tracing from the arch of the aorta is shown using the 1.2 mm catheter device compared to a simultaneously obtained tracing from the same site using a commercially available manometer-tipped catheter. The tracing from the capacitance cell has been purposely displaced downward to illustrate the similarity of wave forms.

These transducers are presently being evaluated in man. These manometer-tipped catheters, which can be inserted percutaneously through a needle, will replace techniques for measuring left heart pressures that use fluid filled catheters or procedures which require cut-downs on arteries for insertion of 7F to 9F catheters.

Notes:

1. Although the principle of operation of this transducer is exactly the same as that described in the references, novel features of this invention are extreme miniaturization and the successful addition of miniature leads protected by heat-shrinkable plastic tubing which is compatible with fluids in the circulatory system.
2. By virtue of these improvements, the transducer can be inserted in smaller ducts (arteries and veins) without disturbing the flow characteristics. It would be very useful for making measurements in babies, for example.
3. These transducers were originally designed for use in wind tunnels for pressure survey probes and for the telemetry of pressure data from small free-flight models. Additional details are contained in:
   a. NASA Tech Brief: *Welded Pressure Transducer Made as Small as 1/8-inch in Diameter.* Brief 63-10429, March 1964.
   b. NASA Tech Note TN D-3319, *FM Telemetry and Free-Flight Techniques for Aerodynamic Measurements in Conventional Wind Tunnels,* by Ronald J. Hruby, John B. McDevitt, Grant W. Coon, Dean R. Harrison, and Joseph H. Kemp, Jr., March 1966.
4. Copies of these publications are for sale by the Clearinghouse for Federal Scientific and Technical Information, Springfield, Virginia 22151; Tech Brief $0.15; Tech Note $3.00.
5. Inquiries concerning this invention may be directed to:

   Technology Utilization Officer
   Ames Research Center
   Moffett Field, California 94035
   Reference: B67-10669

Patent status:

This is the invention of a NASA employee, and U.S. Patent No. 3027769 has been issued to him. Inquiries about obtaining license rights for its commercial development should be addressed to the inventor, Mr. Grant W. Coon, at Ames Research Center.

Source: Grant W. Coon
(ARC-10054)

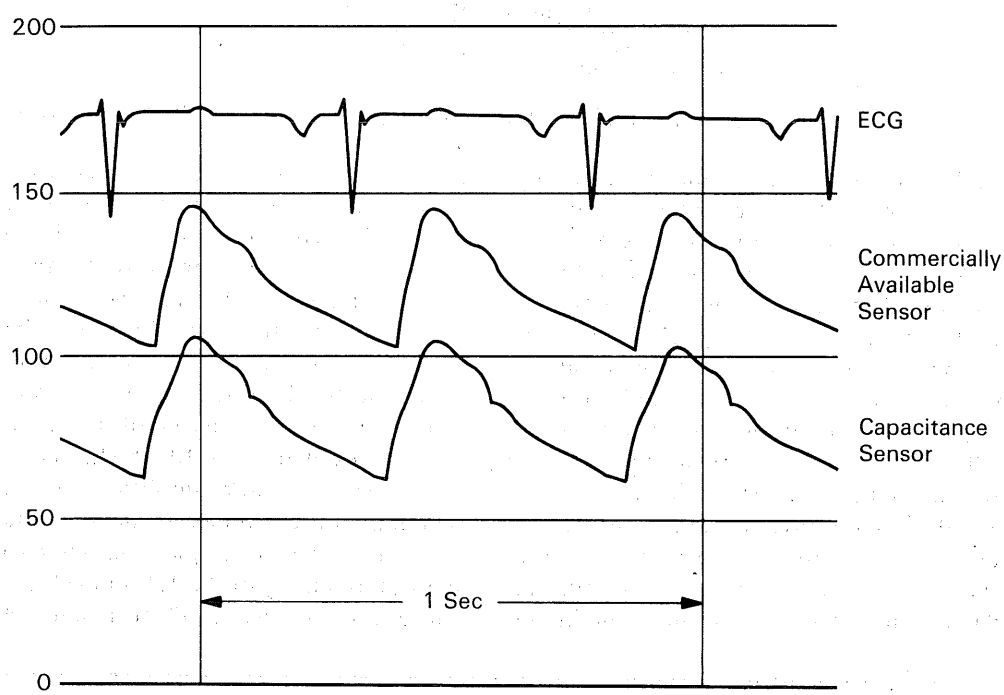

Comparison of Typical Wave Forms

NASA TECH BRIEF

NASA Tech Briefs are issued to summarize specific innovations derived from the U.S. space program, to encourage their commercial application. Copies are available to the public at 15 cents each from the Clearinghouse for Federal Scientific and Technical Information, Springfield, Virginia 22151.

Thermionic Diode Switching Has High Temperature Applications

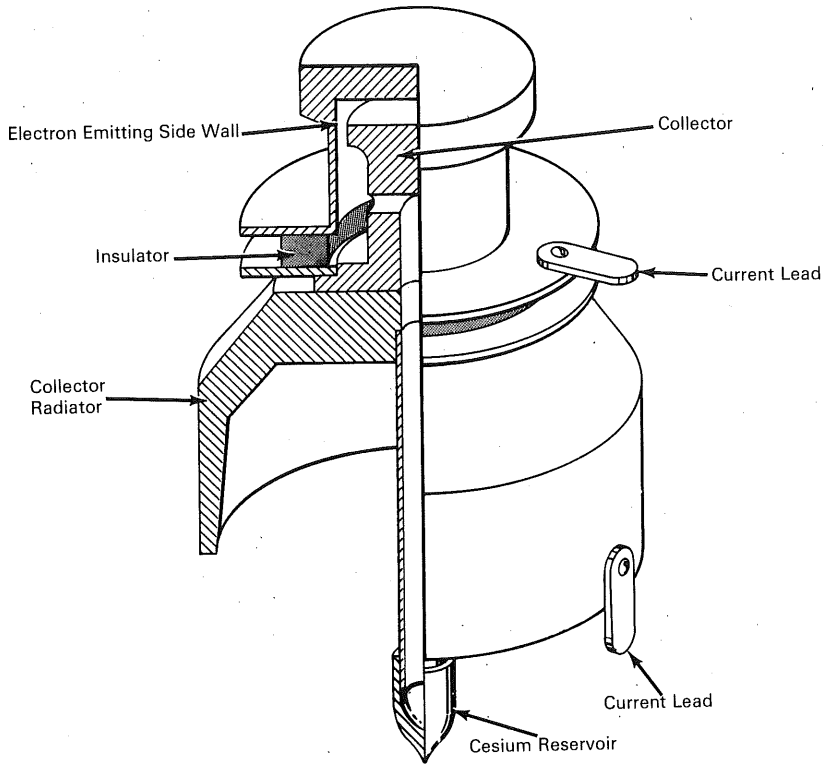

The problem:

Solid-state switches are currently being used to "chop" the output from low-voltage/high-current power sources. Temperature limitations and radiation damage susceptibility of semiconductor switches severely limit their application to high temperature or radioactive power source conditioning. To overcome these difficulties, the semiconductor switch must be placed in a remote location; however, excessive system degradation results from line losses.

The solution:

A thermionic diode switch that permits "chopping" in the immediate vicinity of the power source, regardless of the adverse environment.

How it's done:

When operated under low emitter temperature (1000°C) and low cesium reservoir temperature (<200°C) conditions, the thermionic diode exhibits dual mode (plasma mode and unignited mode) properties of immediate application to high current

(continued overleaf)

This document was prepared under the sponsorship of the National Aeronautics and Space Administration. Neither the United States Government nor any person acting on behalf of the United States Government assumes any liability resulting from the use of the information contained in this document, or warrants that such use will be free from privately owned rights.

switching. In this temperature regime, the thermionic diode has lost its power generation capability; however, it has developed characteristics required of a current switch. In what has been referred to as the plasma mode, the thermionic diode will pass current densities in excess of 12 amp/cm^2 with a forward voltage drop less than 0.6 volts. When the diode is switched out of the plasma mode into the conventional unignited mode, voltages up to 4.0 volts may exist across the diode with only milliamperes of current flowing through it. Thus, by placing a thermionic diode in series with a low-voltage (<4.0 volts)/high-current power source, the output of the source may be chopped by alternately pulsing the thermionic diode switch into the plasma and extinguish modes. The attached figure shows the diode geometry successfully tested.

Note:

Inquiries concerning this innovation may be directed to:

Technology Utilization Officer
NASA Pasadena Office
4800 Oak Grove Drive
Pasadena, California 91103
Reference: B67-10672

Patent status:

No patent action is contemplated by NASA.

Source: Katsunori Shimada and Scott S. Luebbers of Jet Propulsion Laboratory (NPO-10404)

NASA TECH BRIEF

NASA Tech Briefs are issued to summarize specific innovations derived from the U.S. space program, to encourage their commercial application. Copies are available to the public at 15 cents each from the Clearinghouse for Federal Scientific and Technical Information, Springfield, Virginia 22151.

Areas of Irregular, Discontinuous Patterns Rapidly and Accurately Measured

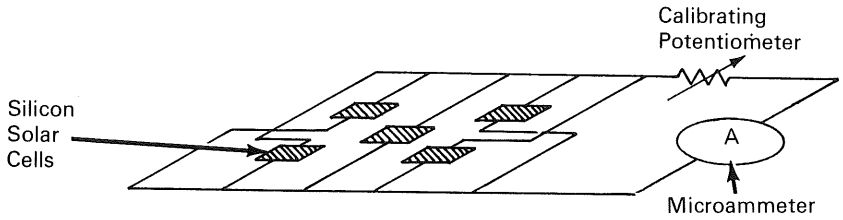

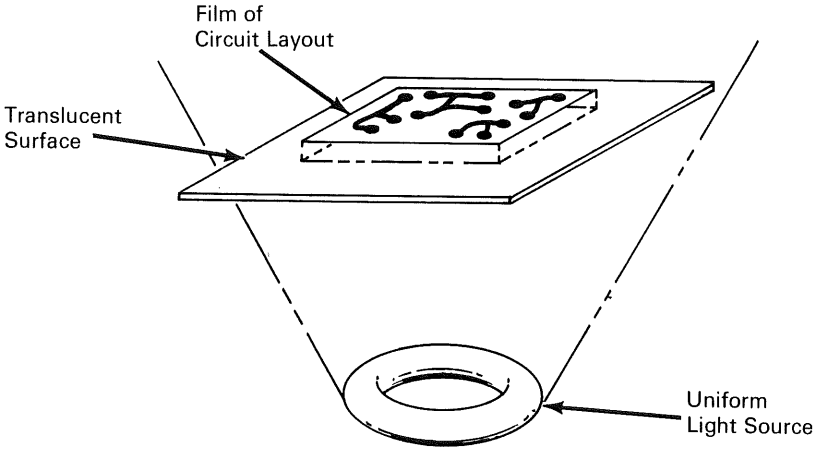

A simple, rapid, and accurate method has been devised for measuring the surface area of a pattern such as comprised by the conductors on a printed circuit board. The measurement problem for printed circuit boards is especially difficult because the conductor paths are curved, of varying widths, and often spaced in irregular arrays. In addition, the measurement must be made without physical damage to the circuit pattern. An accurate measure of the conductor surface area is required to establish the proper current density for electroplating the conductor pattern on the circuit board.

A measurement is carried out by placing a negative or positive film of the circuit layout over a uniformly illuminated (backlighted) translucent surface and determining the proportion of light transmitted through the clear area of the film to silicon solar cells. A microammeter is used to measure the output of the solar cells. The microammeter is calibrated to give a reading of the pattern area in square inches by

(continued overleaf)

This document was prepared under the sponsorship of the National Aeronautics and Space Administration. Neither the United States Government nor any person acting on behalf of the United States Government assumes any liability resulting from the use of the information contained in this document, or warrants that such use will be free from privately owned rights.

switching on the light source when clear film is on the translucent surface and adjusting a potentiometer in the solar cell circuit so that the microammeter reads one microampere per square inch of illuminated surface. In an actual measurement, then, light energy that is normally transmitted to the solar cells through the clear film is reduced by an amount proportional to the surface area of the opaque conductor pattern on the photographic film.

This direct-reading method is considerably more accurate and faster than previous methods of estimating the extent of complex, discontinuous areas. A measurement can be made before the printed circuit board is produced, an advantage not provided by either capacitance ratio methods or weight loss methods, both of which require sample printed circuit boards for the measurement. In these methods, the sample boards must generally be discarded after the measurement is completed.

Notes:

1. This method of surface area measurement is applicable to any flat, opaque pattern.
2. Inquiries concerning this invention may be directed to:

   Technology Utilization Officer
   Goddard Space Flight Center
   Greenbelt, Maryland 20771
   Reference: B67-10674

Patent status:

Inquiries about obtaining rights for the commercial use of this invention may be made to NASA, Code GP, Washington, D.C. 20546.

Source: J. A. Munford and C. E. Whitfield
(GSC-10184)

NASA TECH BRIEF

NASA Tech Briefs are issued to summarize specific innovations derived from the U.S. space program, to encourage their commercial application. Copies are available to the public at 15 cents each from the Clearinghouse for Federal Scientific and Technical Information, Springfield, Virginia 22151.

Broadband Choke Suppresses Spurious Currents in Antenna Structure

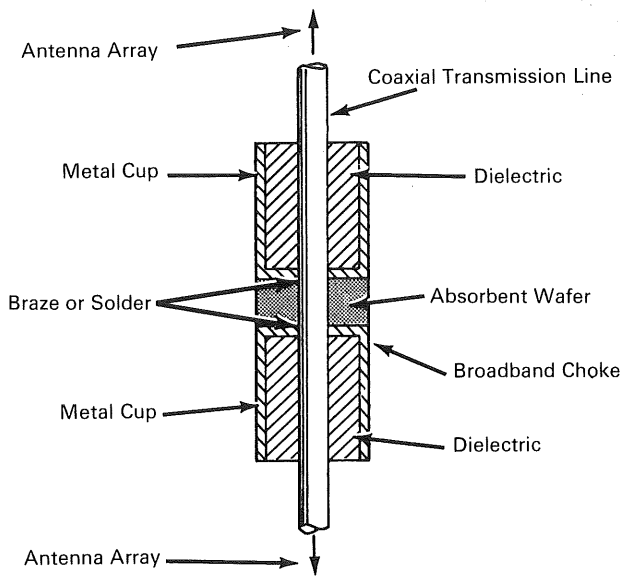

The problem:

To devise a means of preventing induced (spurious) currents in an antenna support structure from adversely affecting the radiation pattern of the antenna over a broad band of radiation frequencies. Conventional quarter-wavelength shorted chokes which have been used to present discrete open circuits to such currents are effective over only a narrow frequency band around the center frequency. Additionally, because chokes of this type must be restricted in diameter (to prevent shielding of the radiation pattern), their usable frequency bandwidth is limited. Also, because of this size restriction, the diameter of the antenna support structure must be kept correspondingly small and therefore generally of decreased physical strength.

The solution:

In one particular antenna system, the support structure contains a coaxial line feed system which connects a pair of antenna arrays for radiating circularly polarized waves in a toroidal field pattern. For this system, a pair of quarter-wavelength chokes are mounted on the coaxial line. The chokes, consisting of metal cups filled with a dielectric material, are arranged so that their open ends face the antenna arrays and their shorted ends are connected by an absorbent wafer (an iron-loaded silicone rubber). The coaxial line, passing through holes cut in the cups, is brazed or soldered to the hole circumferences to form good electrical contact between the cups and the outer surface of the transmission line.

(continued overleaf)

This document was prepared under the sponsorship of the National Aeronautics and Space Administration. Neither the United States Government nor any person acting on behalf of the United States Government assumes any liability resulting from the use of the information contained in this document, or warrants that such use will be free from privately owned rights.

At the center frequency of the system, the chokes present open circuits to the spurious currents. At frequencies off the center frequency, currents would flow past the choke joint if the absorbing wafer were not present. Further, the currents from each end would interact with opposite chokes and reduce the effectiveness of each choke. The absorbent attenuates the currents present on the support structure which are not suppressed by the quarter-wavelength choke arrangement. The choke-absorbent combination approximately doubled the usable frequency range for the particular antenna system studied.

Note:

Inquiries concerning this invention may be directed to:

Technology Utilization Officer
Manned Spacecraft Center
Houston, Texas 77058
Reference: B67-10675

Patent status:

Inquiries about obtaining rights for the commercial use of this invention may be made to NASA, Code GP, Washington, D.C. 20546.

Source: O. L. Bishop and C. A. Bolt, Jr.
of McDonnell–Douglas Corporation
under contract to
Manned Spacecraft Center
(MSC-10013)

NASA TECH BRIEF

NASA Tech Briefs are issued to summarize specific innovations derived from the U.S. space program, to encourage their commercial application. Copies are available to the public at 15 cents each from the Clearinghouse for Federal Scientific and Technical Information, Springfield, Virginia 22151.

Scan Rate Converter for Tape Recording and Playback of TV Pictures

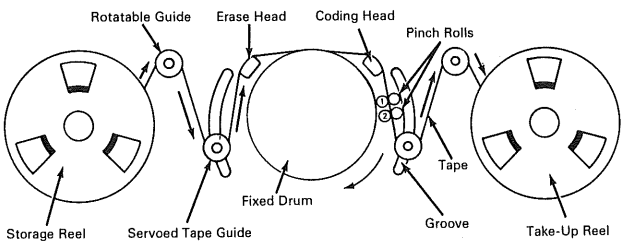

1 VIDEO REC. (RETMA) CAPSTAN
2 SLOW SCAN STEPPING CAPSTAN

FIGURE 1.

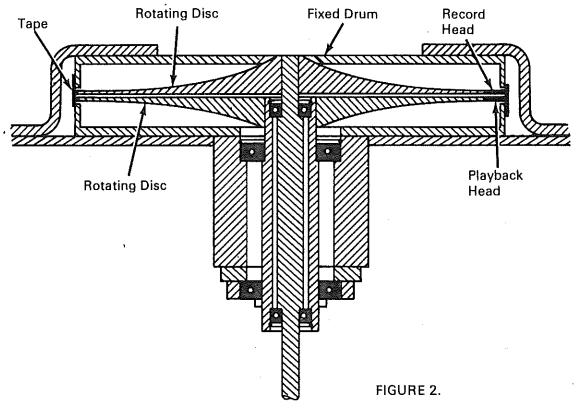

FIGURE 2.

Equipment has been designed for magnetic tape recording and playback that is adaptable to conversion of television pictures, both black and white and color, from one scan rate to another. The equipment can accurately index color picture frames for retrieval electronically and can be used as a document storage and retrieval medium that is compatible with hard-copy printout machines. In this respect, it has the advantage of being able to store 300,000 pictures or documents, any one of which may be retrieved within 3 minutes and made into a copy. The system is usable for scan conversion of television pictures wherein a slow-scan picture may be played back at commercial scan rates. Thus, programs at European scan rates may be recorded and played back at commercial U.S. scan rates. Conventional slow-scan converters of the storage-tube type have several functional disadvantages; the most serious being the decay time of the phosphor screen. Commercial disc-type video recorders and playback units do not have the frequency response necessary for color pictures on a single track.

This system uses the frequency modulation method of recording in which the video input information is amplified in a video amplifier and applied to a voltage-regulated reactance tube modulator. The output from a power amplifier drives a spherical recording head. The playback circuit is also a conventional fm system which accepts the signal from the playback head.

The tape transport mechanism is shown schematically in Figure 1. The motor of the take-up reel is associated with a torque servo which moves a rotatable tape guide along a groove so as to maintain a constant tension on the magnetic recording tape. Similarly, a servoed rotatable tape guide moves in a groove to maintain a constant tension on the tape from the storage reel. The tape from the storage reel threads through the two rotatable guides (on the left), the erase head, and helically 370 degrees around the fixed

(continued overleaf)

This document was prepared under the sponsorship of the National Aeronautics and Space Administration. Neither the United States Government nor any person acting on behalf of the United States Government assumes any liability resulting from the use of the information contained in this document, or warrants that such use will be free from privately owned rights.

drum, which is coated with a solid lubricant to avoid excessive friction. Rotating discs, on which the special recording heads are mounted, spin at specific rates inside the fixed drum. The heads extend through a circumferential opening in the drum so as to record a track diagonally across the tape over a span of 360 degrees. After a track is recorded, the tape moves in the direction toward the coding head which can be utilized to encode the recorded track with binary, audio, or gray scale indicia and can be used in automatic retrieval of the diagonal track. The coding head is a three-track head, i.e., two audio and one control track recorded linearly along the tape edge. One of the audio tracks is used as a binary code track for retrieval by binary comparator. The control track is used for a sync signal to keep the recorded data in alignment with clocking pulses, thereby enabling the use of servos for subtracting out tape transport speed anomalies.

In a first video mode, capstan 1 steps at a RETMA rate moving the tape at 15 inches per second. In a second video mode, capstan 2 is stepped by pulses from external apparatus, such as a TV camera, to move the tape incrementally to a new track 0.005 inch from the previously recorded track. In this mode one field would be recorded by one rotation of the record head. A frame sync pulse then would actuate capstan 2 to move the tape to a new position 0.015 inch further along the tape to record a new frame of video. This takes into account a track width of 0.010 inch and a track spacing of 0.005 inch.

The cross-sectional view (Fig. 2) shows the interior detail of the fixed drum. The record/playback heads are mounted on the two concentric, noncontiguous rotating discs. These discs can scan a concentric peripherally located magnetic tape cylinder at one rate and playback at another. The rates are determined by the relative rotational speeds of the concentric discs, which may be set merely by shifting the axial position of the magnetic tape cylinder so that the recorded track is aligned with the playback head. This is done by helically winding the tape on the fixed drum coaxially located about the rotating discs whereby the tape is in magnetic coupling communication with the rotating magnetic record/playback heads.

Notes:

1. Scan rate conversion, as in recording a slow-scan television picture from a spacecraft (10 frames per second) and replaying the picture at commercial television rates (30 frames per second) 1800 rpm playback speed, can be accomplished directly by this system.
2. In the newly developing areas of contrast enhancement and display of electron microscope fields, a 1000 line/frame television system is used. By means of a standard television pickup system, the picture data can be recorded on the scan rate converting recorder in full color. The contrast can then be enhanced and distortions removed by digital computer means and, subsequently, re-recorded in improved form. The improved pictures can be played back in full color on commercial color television display apparatus.
3. Inquiries concerning this system may be directed to:

   Technology Utilization Officer
   NASA Pasadena Office
   4800 Oak Grove Drive
   Pasadena, California 91103
   Reference: B67-10676

Patent status:

Inquiries about obtaining rights for the commercial use of this invention may be made to NASA, Code GP, Washington, D.C. 20546.

Source: Norman I. Holt
Jet Propulsion Laboratory
(NPO-10166)

NASA TECH BRIEF

NASA Tech Briefs are issued to summarize specific innovations derived from the U.S. space program, to encourage their commercial application. Copies are available to the public at 15 cents each from the Clearinghouse for Federal Scientific and Technical Information, Springfield, Virginia 22151.

DC Pin-to-Pin Testing of Integrated Circuits

The problem:

To develop a nondestructive test method that will measure the electrical characteristics of each element in an integrated circuit.

Because of the limited access to the individual elements in integrated circuits, evaluation of these circuits has been based on overall performance or functional tests. This type of threshold or go–no go functional testing does not readily identify subtle abnormalities or changes in the electrical characteristics of the elements which affect the reliability of the integrated circuits.

The solution:

An external pin-to-pin testing procedure that uniquely evaluates the individual elements of the integrated circuit. The procedure involves choosing specific pairs of pins and applying appropriate test voltages to them. Then by following an equivalent-circuit resolution, it is possible to measure the electrical characteristics (e.g., forward voltage drop, resistance, and reverse breakdown voltage) of the elements within the portion of the circuit under examination.

Notes:

1. A pin-to-pin test plan was developed for a commercial silicon monolithic 6-input gate by the method briefed above. The test plan involved measurements using 20 different pin combinations and 58 individual tests. These tests were performed on automatic test equipment at the rate of 1 device per minute, approximately the time needed to perform a conventional function test. A computerized data analysis program, which permits rapid processing of the test results, was also developed for this type of gate circuitry. The computer program identifies the serial number of any defective circuit, the defective element, and the test reading for that element.
2. This method appears to be a powerful new tool for more effective device and/or production lot screening of integrated circuits.
3. Inquiries concerning this development may be directed to:

   Technology Utilization Officer
   Goddard Space Flight Center
   Greenbelt, Maryland 20771
   Reference: B68-10001

Patent status:

No patent action is contemplated by NASA.

Source: Edward F. Thomas
(GSC-10284)

Category 01

This document was prepared under the sponsorship of the National Aeronautics and Space Administration. Neither the United States Government nor any person acting on behalf of the United States Government assumes any liability resulting from the use of the information contained in this document, or warrants that such use will be free from privately owned rights.

NASA TECH BRIEF

NASA Tech Briefs are issued to summarize specific innovations derived from the U.S. space program, to encourage their commercial application. Copies are available to the public at 15 cents each from the Clearinghouse for Federal Scientific and Technical Information, Springfield, Virginia 22151.

Gage Monitors Quality of Cross-Wire Resistance Welds

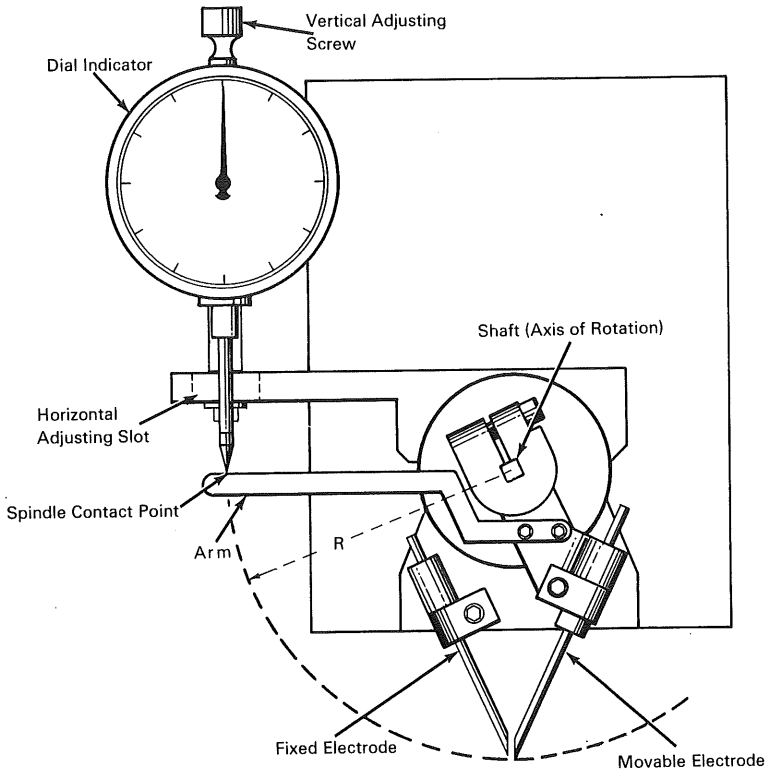

The problem:

To devise a reliable nondestructive means of monitoring the quality of cross-wire resistance welds during the welding operation. Determinations of weld quality are conventionally made by destructive tests on production line samples.

The solution:

A gage that gives a dial indication of the relative embedment of the cross wires during the actual welding operation. Previous work has established a direct relationship between the depth of embedment and both weld strength and consistency.

How it's done:

The gage incorporates a dial indicator (graduated in mils) and a spindle with a contact point. In one type of welding machine (the pincer type, illustrated), an arm fixed to the rotating shaft of the welding head bears against the spindle contact point. The tip of the movable electrode and the arm at the position of the spindle contact point have the same radius (R) with

(continued overleaf)

This document was prepared under the sponsorship of the National Aeronautics and Space Administration. Neither the United States Government nor any person acting on behalf of the United States Government assumes any liability resulting from the use of the information contained in this document, or warrants that such use will be free from privately owned rights.

respect to the rotational axis of the shaft of the welding head. During the welding operation, the movable electrode tip in contact with the wire workpiece and the spindle contact point are displaced by the same amount. The dial reading is then proportional to the electrode displacement, or wire embedment, during the welding operation.

Notes:

1. The device can be varied to fit other types of welding heads (e.g., the press type, which uses opposed electrodes).
2. This displacement (embedment) can be measured electronically, using a differential transformer or a linear potentiometer in conjunction with a direct or recorded digital readout.
3. Inquiries concerning this gage may be directed to:

   Technology Utilization Officer
   Goddard Space Flight Center
   Greenbelt, Maryland 20771
   Reference: B68-10002

Patent status:

No patent action is contemplated by NASA.

Source: J. Etzel and A. Piltch
(GSC-90549)

NASA TECH BRIEF

NASA Tech Briefs are issued to summarize specific innovations derived from the U.S. space program, to encourage their commercial application. Copies are available to the public at 15 cents each from the Clearinghouse for Federal Scientific and Technical Information, Springfield, Virginia 22151.

Linear Analog DC Voltage-to-Pulse-Width Converter

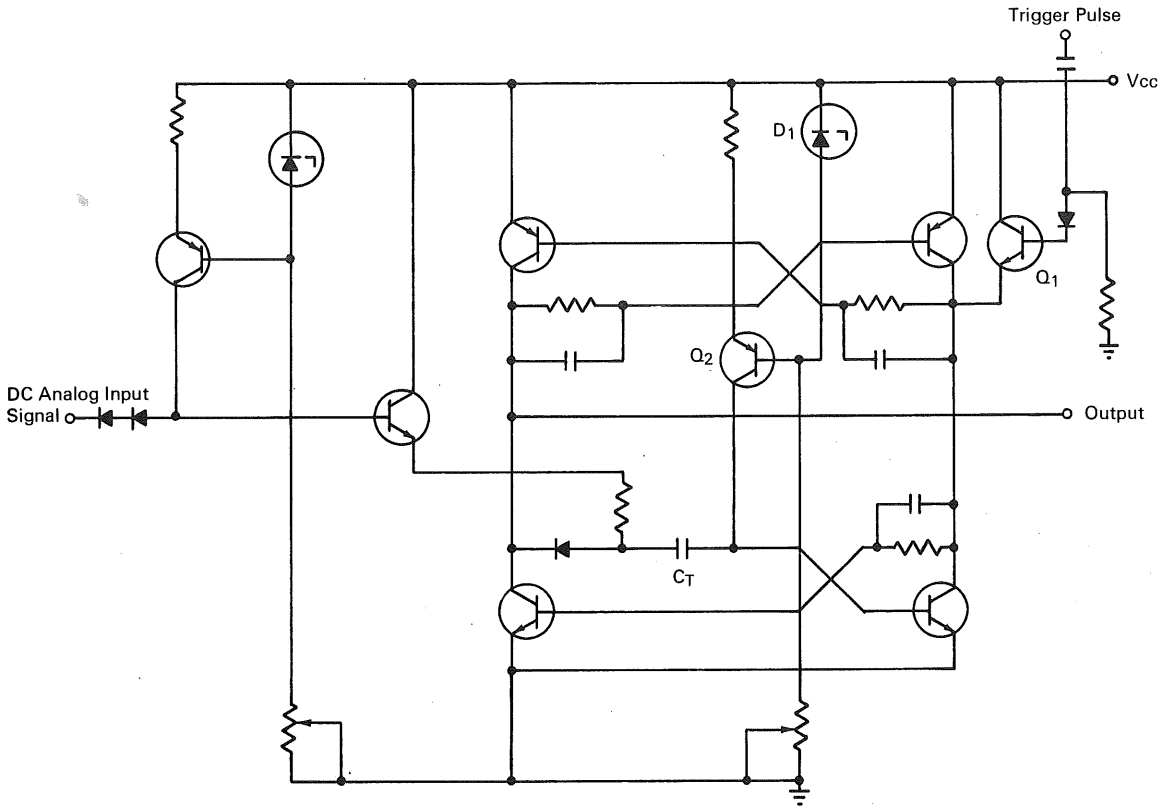

This circuit converts a dc analog input signal (0 to 5 volts) to pulse widths that are proportional to the input signal voltage. The circuit represents an improvement over previous pulse-width converters with regard to design simplicity, efficiency, linearity, accuracy, and temperature stability.

The converter consists of a complementary monostable flip-flop controlled by the constant-current discharge of the temperature compensated capacitor C_T. This capacitor is charged by the analog input signal. A trigger pulse through Q_1 initiates a linear discharge of C_T through the constant current generator Q_2 and zener diode D_1. The complementary flip-flop operates for one complete cycle with a period (pulse width) proportional to the dc analog input voltage.

Notes:

1. The linearity of this circuit is relatively independent of temperature variations over a range from −20° to 70°C. Its power drain is less than 100 milliwatts.

(continued overleaf)

This document was prepared under the sponsorship of the National Aeronautics and Space Administration. Neither the United States Government nor any person acting on behalf of the United States Government assumes any liability resulting from the use of the information contained in this document, or warrants that such use will be free from privately owned rights.

2. The circuit would be particularly useful as an analog-to-digital converter where low power, ruggedness, reliability, and good linearity are prime requirements.
3. Inquiries concerning this circuit may be directed to:

   Technology Utilization Officer
   Goddard Space Flight Center
   Greenbelt, Maryland 20771
   Reference: B68-10003

Patent status:

No patent action is contemplated by NASA.

Source: W. R. Crockett
(GSFC-556)

NASA TECH BRIEF

NASA Tech Briefs are issued to summarize specific innovations derived from the U.S. space program, to encourage their commercial application. Copies are available to the public at 15 cents each from the Clearinghouse for Federal Scientific and Technical Information, Springfield, Virginia 22151.

Bimetal Sensor Averages Temperature of Nonuniform Profile

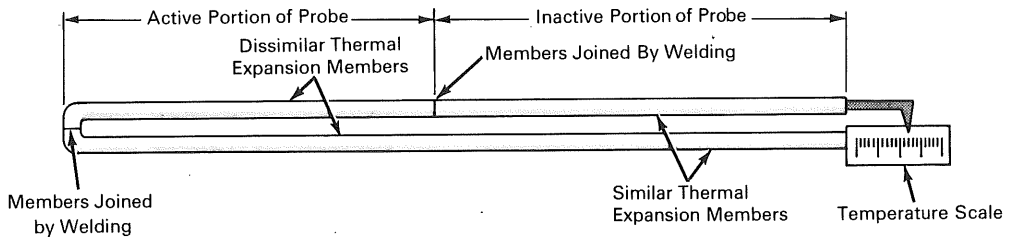

TEMPERATURE PROBE DESIGN PRINCIPLE

The problem:

The usual method to determine an average temperature for a span of nonuniform temperatures consists of averaging a series of point temperature measurements. If the span is long or contains large temperature gradients, the number and distribution of point temperature measurements affect the accuracy of the calculated average temperature. Although bimetal differential elongation probes have been used as steady-state temperature indicators, no study or analysis of bimetal probe performance in a nonuniform temperature field could be found.

The solution:

An instrument that measures an average temperature across a nonuniform temperature profile under steady-state conditions. The principle of operation is an application of the expansion of a solid material caused by a change in temperature.

How it's done:

The temperature probe consists of two parallel members of dissimilar materials joined together at one end so that a change in temperature along the probe length produces a difference in elongation at the free ends of the two materials. When the temperature along the probe length is nonuniform, the total difference in elongation at the free ends is a summation of local differences as generated by local temperatures along the probe. Thus, the total difference in elongation becomes a measurement of the average temperature along the length of the probe.

Notes:

1. The linear motion produced by the probe may be indicated on a meter attached directly to the probe assembly, or the motion may be converted, by a transducer, to a signal for actuating a remote meter.
2. A prototype instrument had an active probe length of 35.6 centimeters consisting of 0.157 centimeter diameter rods of tungsten and stainless steel. A probe extension consisting of 55.8 centimeter long rods of stainless steel was used to locate the transducer at a safe distance from the heated active portion of the probe.

   The transducer was a commercially available linear variable differential transformer which generated an output voltage proportional to the axial displacement of the core within the transformer. The body of the transducer was attached to the stainless steel probe members, while the movable tranformer core was attached to the extension of the tungsten member.

   Probe calibration and performance tests were conducted in a 20-kilowatt controlled-temperature

(continued overleaf)

This document was prepared under the sponsorship of the National Aeronautics and Space Administration. Neither the United States Government nor any person acting on behalf of the United States Government assumes any liability resulting from the use of the information contained in this document, or warrants that such use will be free from privately owned rights.

furnace. The active portion of the probe was inserted to four different lengths through a hole in the furnace door. Uniform probe temperature profiles, which were used for calibration checks, were obtained with full insertion of the probe in the furnace, while nonuniform temperature profiles were obtained by inserting three-fourths, one-half, or one-fourth of the active probe length in the furnace; the remainder of the probe and the transducer were exposed to room temperature.

The temperatures indicated by the probe were compared with the arithmetic average of temperatures obtained from the eight reference thermocouples spaced equally along the probe at test conditions which indicated temperature profiles that varied as much as 750°C. For the nonuniform temperature profiles, the bimetal probe averaged as much as 13°C lower than the arithmetic average temperature obtained from the eight reference thermocouples. An analysis indicated that for steep temperature gradients the bimetal probe measured temperature is more accurate than the average temperature obtained from eight thermocouples.

3. This device can be used to indicate the average temperature over a nonuniform temperature profile in jet engine ducts, heat exchangers, ovens and furnaces, and other environments.
4. Inquiries concerning this innovation may be directed to:

Technology Utilization Officer
Lewis Research Center
21000 Brookpark Road
Cleveland, Ohio 44135
Reference: B68-10007

Patent status:

No patent action is contemplated by NASA.

Source: R. T. Dittrich
(LEW-10362)

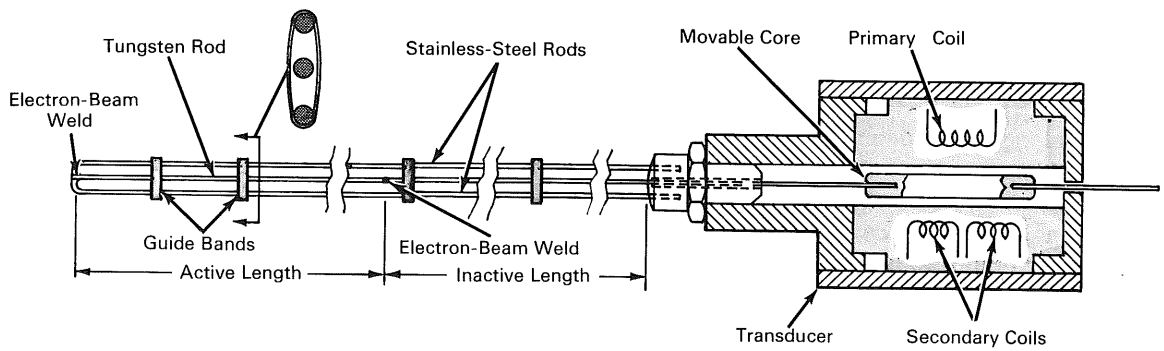

PROTOTYPE TEMPERATURE-MEASURING PROBE AND TRANSDUCER

NASA TECH BRIEF

NASA Tech Briefs are issued to summarize specific innovations derived from the U.S. space program, to encourage their commercial application. Copies are available to the public at 15 cents each from the Clearinghouse for Federal Scientific and Technical Information, Springfield, Virginia 22151.

Improved Phase Locked Loop Receiver

An improved phase locked loop receiver has been designed to track and demodulate a signal whose signal-to-noise ratio may be very low and whose information sidebands are close to each other in frequency. When the sideband frequency approximates 10 percent or less of the carrier frequency, conventional methods for recovering the carrier would result in the loss of the information in the sideband.

In the improved receiver, a phase locked loop recovers the carrier from the received input signals and applies it together with these input signals to a demodulator which recovers the sidebands. The phase locked loop contains a variable frequency oscillator (VFO) and associated circuits for generating a signal that is of the same frequency as the carrier. The loop also contains a phase detector that generates an error signal for controlling the frequency and phase of the VFO signal so that it is coherent with the received carrier signal. The loop includes circuitry for applying control and reference signals to the phase detector on the basis of which the error signals can be generated. A frequency standard provides the reference signals. The control circuitry includes first and second mixers and first and second bandpass filters, each having a passband sufficient to pass the expected (Doppler) frequency shift and matched phase response characteristics. The recovered carrier and the reference signals are applied to the second mixer and passed through the second filter to the first mixer. The input signals are passed through the first filter to the first mixer. The output of the first mixer, at the same frequency as the reference signal, is applied as the control signal to the phase detector. By generating the control signals in this manner, the loop excludes noise and does not interfere with the sidebands while tracking the (Doppler) variation in carrier frequency. The carrier is recovered, even though its amplitude may be well below the ambient noise level.

Notes:

1. Although the circuitry was especially designed for tracking rf signals transmitted from spacecraft, it should be useful in systems requiring signals that are phase coherent with an input carrier, as in signal analyzers.
2. Inquiries concerning this receiver may be directed to:

   Technology Utilization Officer
   Goddard Space Flight Center
   Greenbelt, Maryland 20771
   Reference: B68-10008

Patent status:

Title to this invention has been waived under the provisions of the National Aeronautics and Space Act [42 U.S.C. 2457 (f)] to General Dynamics/Electronics, 1400 North Goodman Street, Post Office Box 226, Rochester, New York 14601.

Source: T. J. Daley
of General Dynamics/Electronics
under contract to
Goddard Space Flight Center
(GSC-09561)

Category 01

This document was prepared under the sponsorship of the National Aeronautics and Space Administration. Neither the United States Government nor any person acting on behalf of the United States Government assumes any liability resulting from the use of the information contained in this document, or warrants that such use will be free from privately owned rights.

NASA TECH BRIEF

NASA Tech Briefs are issued to summarize specific innovations derived from the U.S. space program, to encourage their commercial application. Copies are available to the public at 15 cents each from the Clearinghouse for Federal Scientific and Technical Information, Springfield, Virginia 22151.

One-Shot Pulse Shaper Circuit

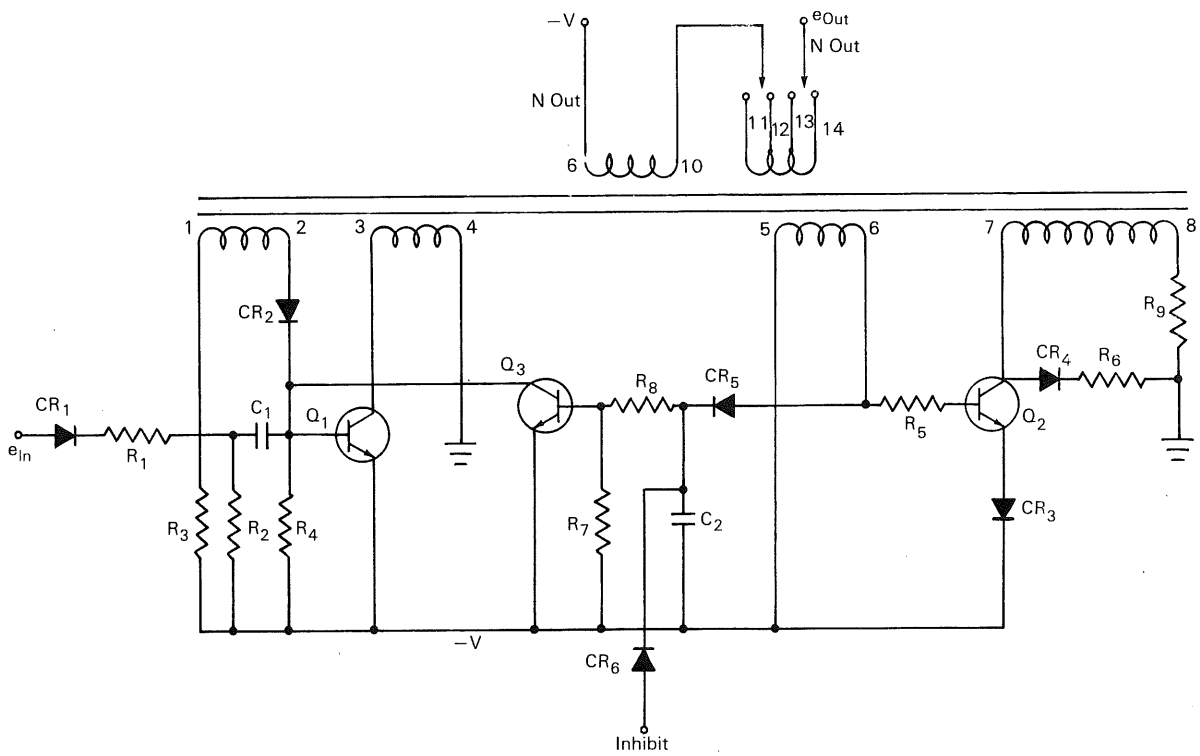

The problem:

Previously designed pulse shapers dissipate large amounts of power so that a long counting chain uses as few shapers as possible. This leads to temperature problems that are caused by energy losses in the coupling transistors that isolate scaler stages.

The solution:

A pulse shaper circuit that is basically a magnetic one-shot multivibrator consisting of two blocking oscillators and an inhibit circuit and that exhibits low power dissipation, self setting, and easy triggering.

How it's done:

The input stage, consisting of CR_1, R_1, and R_2 is capacitively coupled to the base of Q_1 through C_1 to prevent drawing excessive power from it. The first blocking oscillator is made up of Q_1, $N_{1\text{-}2}$, $N_{3\text{-}4}$, R_3, R_4, and CR_2. When e_{in} goes high, Q_1 turns on and the first blocking oscillator begins to switch the core. Positive feedback from $N_{3\text{-}4}$ to base of Q_1 via $N_{1\text{-}2}$ keeps the blocking oscillator on until the core saturates. The second blocking oscillator consists of Q_2, $N_{5\text{-}6}$, $N_{7\text{-}8}$, R_5, R_6, CR_3, and CR_4. After the core has

(continued overleaf)

This document was prepared under the sponsorship of the National Aeronautics and Space Administration. Neither the United States Government nor any person acting on behalf of the United States Government assumes any liability resulting from the use of the information contained in this document, or warrants that such use will be free from privately owned rights.

saturation, Q_1 cuts off causing the voltage across N_{3-4} to reverse polarity, thus inducing a voltage in N_{5-6} that turns off Q_2. The second blocking oscillator then turns on and resets the core.

The inhibit circuit consists of Q_3, R_7, R_8, CR_5, CR_6, and C_2 and inhibits the first blocking oscillator from turning on when the second blocking oscillator turns off. When Q_2 turns off, Q_3 is kept on by the discharge of C_2 through R_8 for a few microseconds, thereby inhibiting Q_1 and preventing the pulse shaper from oscillating. Coils N_{11-12}, N_{12-13}, and N_{13-14} are used to fine-adjust the output coil N_{9-10}. An inhibit input is provided at CR_6 where a positive input prevents the pulse shaper from turning on.

Notes:

1. Because of its low power requirements, this pulse shaper can be used to buffer each subchain of three scalers. This contributes to ease in packaging and minimizes temperature and trimming problems.
2. Inquiries concerning this innovation may be directed to:

   Technology Utilization Officer
   Goddard Space Flight Center
   Greenbelt, Maryland 20771
   Reference: B68-10012

Patent status:

No patent action is contemplated by NASA.

Source: R. G. Radys
of Hughes Aircraft Company
under contract to
Goddard Space Flight Center
(XGS-11379)

NASA TECH BRIEF

NASA Tech Briefs are issued to summarize specific innovations derived from the U.S. space program, to encourage their commercial application. Copies are available to the public at 15 cents each from the Clearinghouse for Federal Scientific and Technical Information, Springfield, Virginia 22151.

Input Gate Circuit Converted for Use as Linear Amplifier

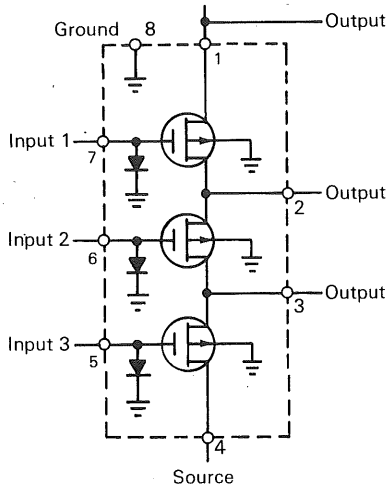

FIG. 1
MOS 3 INPUT GATE CIRCUIT

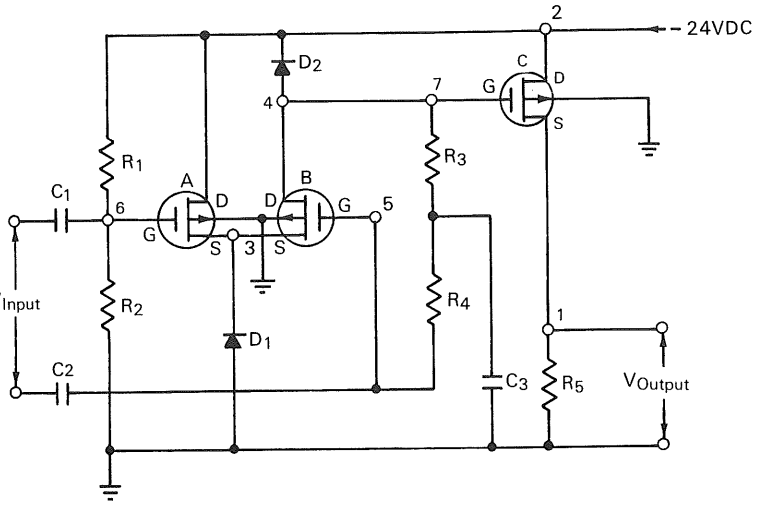

FIG. 2
LINEAR AMPLIFIER CONVERSION

The problem:

To design a linear amplifier in a microphone circuit that has high input impedance, low output impedance, low cost, and is small enough to fit on a standard printed circuit card. Existing techniques use several components and voltage feedback circuitry for impedance matching. These techniques usually require expensive and bulky components.

The solution:

Convert a commercially available integrated circuit that is marketed as a digital computer input gate circuit. This integrated circuit uses metal oxide semiconductor (MOS) devices, and is reconnected as a linear amplifier.

How it's done:

Figure 1 shows a commercially available integrated circuit, which is a P-channel enhancement type, three-input NAND gate circuit. The gate contains three MOS transistors in series. Figure 2 shows the same circuit biased and converted for linear operation. Because the source and drain of the MOS are interchangeable, the common connection may function as a source in one pair and a drain in another pair. By connecting pin 2 to the –24 vdc supply, pin 3 to source diode D_1, pin 4 to pin 7, and the remaining pins to suitable bias points, the circuit is converted. An ac input is coupled through capacitors C_1 and C_2 and is applied to the gate elements of MOS A and B. The MOS A and B circuit forms a differential amplifier controlling the gate of MOS C which controls the output signal across R_5.

Voltage dividers R_1 and R_2 provide dc bias for MOS A. Constant current diode D_1 supplies a constant 2-milliampere current to the source elements of MOS A and B. Thus a constant total drain current

(continued overleaf)

This document was prepared under the sponsorship of the National Aeronautics and Space Administration. Neither the United States Government nor any person acting on behalf of the United States Government assumes any liability resulting from the use of the information contained in this document, or warrants that such use will be free from privately owned rights.

flows regardless of signal polarity. MOS A or B is enhanced whenever a negative voltage is applied to its gate. The electrostatic field produced by the gate voltage is applied to the source and drain junctions forming a continuous current path. The magnitude of the gate signal determines the degree of enhancement, which in turn determines conductivity.

Constant current diode D_2 supplies a constant 1-milliampere current with a high impedance load to the drain element of MOS B. The diode combination establishes circuit balance regardless of temperature effects to circuit parameters and overcomes the problem of transconductance mismatch. The values of voltage divider resistors R_1 and R_2 and resistors R_3 and R_4 are selected for balance of the high input impedance ratios which are necessary for MOS circuit operation. As MOS A and B vary in conduction, the amplified signal is applied to the gate elements of MOS C. As MOS C conducts, a low impedance output signal (3000 ohms) is developed across resistor R_5. Thus, an overall circuit impedance transformation from 10 megohms to 3 kilohms is provided.

The voltage gain of the circuit is linear over a frequency range of 4 Hz to 100 kHz. Above 100 kHz, the voltage gain decreases and is reduced by a half at approximately 180 kHz.

Note:

Inquiries concerning this circuit may be directed to:

Technology Utilization Officer
Marshall Space Flight Center
Huntsville, Alabama 35812
Reference: B68-10015

Patent status:

No patent action is contemplated by NASA.

Source: T. P. Harper
of IBM
under contract to
Marshall Space Flight Center
(MFS-14265)

NASA TECH BRIEF

NASA Tech Briefs are issued to summarize specific innovations derived from the U.S. space program, to encourage their commercial application. Copies are available to the public at 15 cents each from the Clearinghouse for Federal Scientific and Technical Information, Springfield, Virginia 22151.

Small, Low Power Analog-to-Digital Converter

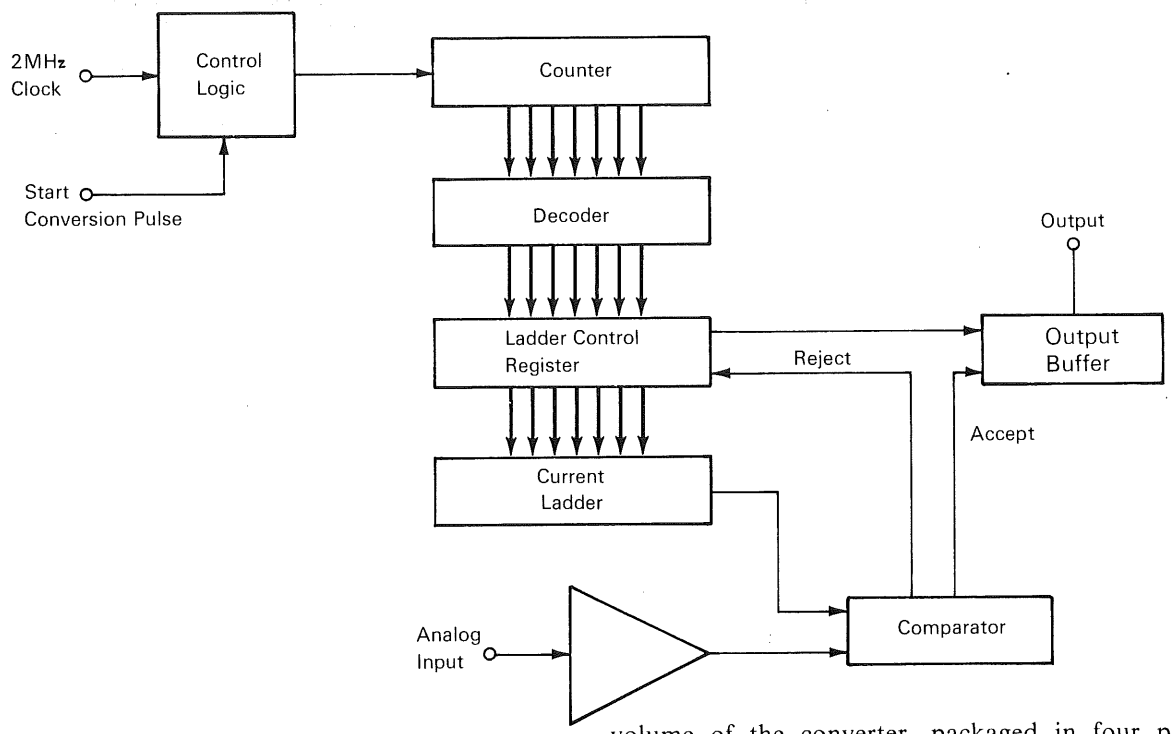

The problem:

To design a small, low-power, high-speed analog-to-digital converter that would be suitable for use in an airborne test data system.

The solution:

An 8-bit analog-to-digital converter using silicon chip integrated circuits. The output bit rate is 1 MHz and the maximum conversion rate is 125 kHz. The digital output quantum is 20 millivolts, and the maximum full scale output is 5.100 volts. Total power consumption is less than 840 milliwatts. The successive approximation method of analog-to-digital conversion is used to generate the digital output. Overall volume of the converter, packaged in four potted modules, is approximately 2 cubic inches.

Operation of the converter is summarized in conjunction with the block diagram. A start conversion pulse resets the control logic, counter, and ladder control register, which consists of 8 dc flip-flops and associated "dump" and reset logic. The most significant bit (bit 1) flip-flop in the ladder control register is set (by a specific output from the decoder) to switch the most significant current from the current ladder to the comparator summing line. At 750 nanoseconds after the end of the start conversion pulse, the bit 1 current is compared with the current derived from the analog input. If the summed ladder current

(continued overleaf)

This document was prepared under the sponsorship of the National Aeronautics and Space Administration. Neither the United States Government nor any person acting on behalf of the United States Government assumes any liability resulting from the use of the information contained in this document, or warrants that such use will be free from privately owned rights.

is smaller than the analog current, the bit is retained; if it is larger, a dump pulse is generated to reset the appropriate control register flip-flop. When the flip-flop resets, it switches the corresponding ladder current off the summing line. At the end of the bit time (1 microsecond), the counter advances 1 count. This advance switches in the next smaller bit, the comparison is made after a 750 nanosecond settling time, and the bit is then either accepted or rejected. This procedure is repeated until all 8 bits have been compared. The control logic then resets register bits 2 through 8 and holds the counter in bit time zero until the next start conversion pulse is received. Simultaneously with each comparison, the output flip-flop is set if the bit is accepted and reset if the bit is rejected, generating the digital output.

Notes:

1. The converter can be used in any digital system in which it is necessary to convert an analog voltage into a serial digital signal and 8-bit accuracy is acceptable, such as in automated production or process control systems. With further development, the converter could be improved to operate at a higher speed and with greater accuracy.
2. Inquiries concerning this converter may be directed to:

   Technology Utilization Officer
   Marshall Space Flight Center
   Huntsville, Alabama 35812
   Reference: B68-10016

Patent status:

No patent action is contemplated by NASA.

Source: D. H. Fullerton and R. D. Dunn
of The Boeing Company
under contract to
Marshall Space Flight Center
(MFS-13954)

NASA TECH BRIEF

NASA Tech Briefs are issued to summarize specific innovations derived from the U.S. space program, to encourage their commercial application. Copies are available to the public at 15 cents each from the Clearinghouse for Federal Scientific and Technical Information, Springfield, Virginia 22151.

Regulated DC-to-DC Converter Features Low Power Drain

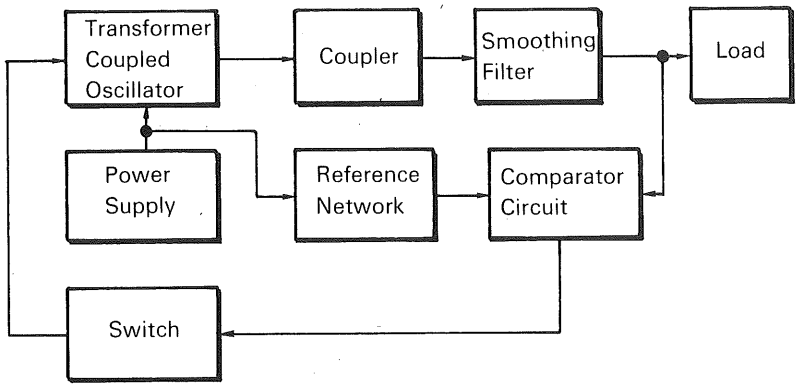

The problem:

In the close regulation of dc power for the operation of critical electronic equipment, the equipment is normally isolated from the power supply by a dc-to-dc converter. In prior art, such converters employed transformer coupling circuits using relatively large magnetic cores, plus pulse width control circuitry for regulation, each of which consumes appreciable power.

The solution:

A regulated dc-to-dc converter that requires negligible standby power and whose main operating circuitry consumes power intermittently, according to load conditions, rather than constantly.

How it's done:

The transformer-coupled oscillator receives a voltage from the power supply in accordance with the switch as controlled by the voltage level at the load. Thus, the switch functions to release the transformer-coupled oscillator only when the load voltage drops below a predetermined value. The comparator circuit, a differential amplifier, compares the voltage output from the reference network. In this way, the comparator circuit enables the switch as the load demands it to provide additional energy by way of the transformer-coupled oscillator. The switching rate of the oscillator thus functions to automatically compensate for variations either in the input voltage or the load demands.

Notes:

1. This circuitry has been satisfactory in several NASA space experiments as rocket, balloon, and spacecraft applications, and should find use wherever such conversion must be made in limited power situations.
2. Inquiries concerning this invention may be directed to:

   Technology Utilization Officer
   Goddard Space Flight Center
   Greenbelt, Maryland 20771
   Reference: B68-10017

Patent status:

Inquiries about obtaining rights for the commercial use of this invention may be made to NASA, Code GP, Washington, D.C. 20546.

Source: Joseph Thornwall
(GSC-03429)

Category 01

This document was prepared under the sponsorship of the National Aeronautics and Space Administration. Neither the United States Government nor any person acting on behalf of the United States Government assumes any liability resulting from the use of the information contained in this document, or warrants that such use will be free from privately owned rights.

NASA TECH BRIEF

NASA Tech Briefs are issued to summarize specific innovations derived from the U.S. space program, to encourage their commercial application. Copies are available to the public at 15 cents each from the Clearinghouse for Federal Scientific and Technical Information, Springfield, Virginia 22151.

Analysis of Flutter in Tape Transport Systems

A study was made to determine the effect of flutter on digital data recorded by magnetic tape recorders used with instrumentation systems and to propose a method for smoothing the consequent bit rate variations in the data. Flutter is treated from the standpoint of tape velocity variations during the record and playback operations. The major flutter effect for both FM and direct recording techniques is shown to be a perturbation of the signal time base.

General expressions for flutter perturbed signals are derived, and applied to a sinusoid perturbed by sinusoidal flutter. Such flutter is shown to introduce sidebands about the frequency of the sinusoid spaced at intervals of the flutter frequency. Random or Gaussian flutter with a constant spectral density (which closely approximates actual flutter) is shown to "smear" the power of a sinusoid about the recorded frequency. The effect of Gaussian flutter on a digital signal is a Gaussian variation of bit rate and bit-to-bit spacing.

A buffer system is proposed for smoothing the Gaussian bit rate variations in digital data. The proposed system is shown to attenuate bit rate variations at the rate of 6 db/octave above a frequency twice that of the natural frequency of the buffer control loop. The buffer is a flip-flop register in which the incoming bits are stored serially until read out by gating circuitry. The rate at which the bits are read from the buffer is equal to the frequency of a voltage-controlled oscillator (VCO), which consists of a multivibrator with a center frequency equal to the recorder mean bit rate. The voltage for controlling the VCO frequency is derived by sensing the number of bits stored in the buffer above or below a set reference level of bits. The output voltage from a queue sense circuit is filtered by a low pass filter. The filtered output is used to control the VCO frequency, hence the output bit rate.

Note:

Inquiries concerning this invention may be directed to:

Technology Utilization Officer
Marshall Space Flight Center
Huntsville, Alabama 35812
Reference: B68-10027

Patent status:

Inquiries about obtaining rights for the commercial use of this invention may be made to NASA, Code GP, Washington, D.C. 20546.

Source: Richard S. Simpson and Robert C. Davis
of Bureau of Engineering Research
University of Alabama
under contract to
Marshall Space Flight Center
(MFS-11970)

Category 01

This document was prepared under the sponsorship of the National Aeronautics and Space Administration. Neither the United States Government nor any person acting on behalf of the United States Government assumes any liability resulting from the use of the information contained in this document, or warrants that such use will be free from privately owned rights.

NASA TECH BRIEF

NASA Tech Briefs are issued to summarize specific innovations derived from the U.S. space program, to encourage their commercial application. Copies are available to the public at 15 cents each from the Clearinghouse for Federal Scientific and Technical Information, Springfield, Virginia 22151.

Digital Data Averager Improves Conventional Measurement System Performance

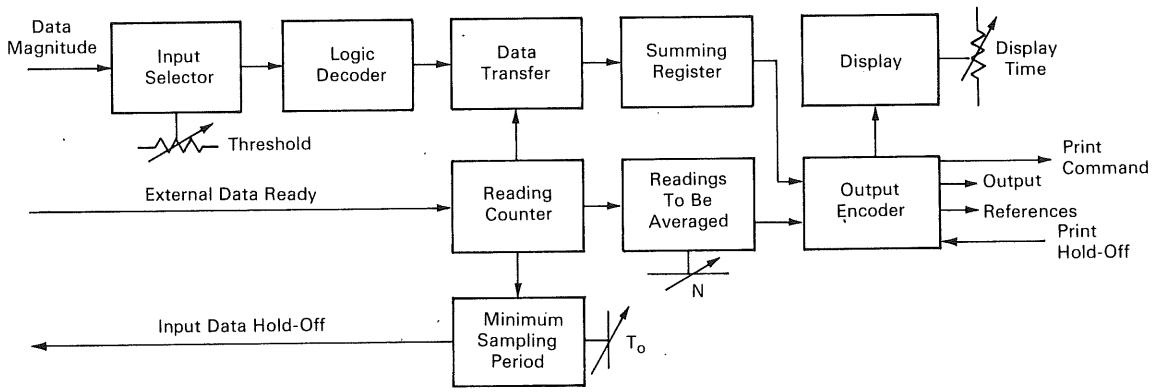

A multipurpose digital averager has been developed to provide measurement improvement in noisy signal environments. It provides increased measurement accuracy and resolution to basic instrumentation devices by an arithmetical process in real time. It is used with standard conventional measurement equipment and digital data printers. The averager does not introduce error to the converted data, but permits precise measurements not normally obtainable by other than classical filtering prior to measurement and subsequent data conversion.

The general approach used in smoothing the raw data is to sum the magnitudes of input digital data, count the number of successive readings, and divide the former by the latter. The result of this arithmetical operation is generated continuously in real time, concluding in a true statistical average value when the selected number of readings to be averaged has been reached. A selector switch is incorporated to permit input readings to be averaged in powers of 10 covering 10 to 1,000,000 readings.

In operation, data magnitude is buffered and threshold leveled to the logic polarity and amplitude required of the input selector gates, which are involved in the input truncation whereby 7 input digits out of a possible 9 may be used in data transfer and arithmetical operation. The truncated 28 lines of digital data output from the input selector that represent data magnitudes from 10^1 through 10^6 are then transferred into the summing register. The data transfer control signal is derived from the external digital measuring device through its external data ready command that is synchronized at the reading counter. Each external data ready positive going step is progressively totalized in the reading counter in order to account for the preset number of readings to be averaged.

When the preset number of readings (10^1 to 10^6) has been reached, there will be established as a numerical divisor the preset number available to control a gated clock for strobing the summing register dividend data, thus producing a quotient or averaged value. The averaged value is then encoded in the out-

(continued overleaf)

This document was prepared under the sponsorship of the National Aeronautics and Space Administration. Neither the United States Government nor any person acting on behalf of the United States Government assumes any liability resulting from the use of the information contained in this document, or warrants that such use will be free from privately owned rights.

put encoder so the data may be displayed by the visual in-line decimal readouts, or conditioned for transmission and made available for digital printer use.

The minimum sampling period adjustment (T_o) is a series of 10 discrete time constants between 0.1 ms and 40.0 ms which will provide delay between the initiation of external data ready and the control signal, input data hold-off.

Note:

Inquiries concerning this innovation may be directed to:

Technology Utilization Officer
Manned Spacecraft Center
Houston, Texas 77058
Reference: B68-10018

Patent status:

No patent action is contemplated by NASA.

Source: T. K. Naylor, J. A. Roberts, Jr., and R. R. Schellenbach of Radio Corporation of America under contract to Manned Spacecraft Center (MSC-12078)

NASA TECH BRIEF

NASA Tech Briefs are issued to summarize specific innovations derived from the U.S. space program, to encourage their commercial application. Copies are available to the public at 15 cents each from the Clearinghouse for Federal Scientific and Technical Information, Springfield, Virginia 22151.

Circuit Detects Voltage Decrease in Computer Power Supply

A rapid-response monitoring circuit has been designed to detect a voltage decrease or dropout in any single phase or up to all three phases simultaneously of a 3-phase 60 Hz power supply for a computer. Rapid detector response to small voltage decreases in the power supply is essential to prevent erroneous operation of the computer.

The circuit senses a decrease in the supply voltage and responds to this decrease in approximately 1.5 milliseconds. It can be adjusted to detect a 1 to 10 percent decrease of the instantaneous normal voltage in each cycle of the power supply. The circuit incorporates indicator lamps to indicate normal or below-normal voltage conditions and provides a digital pulse output for a chronological record on tape of voltage irregularities. The circuit may also be used to interrupt power to the computer (or other power-using equipment) in the event of a low voltage condition.

Notes:

1. This circuit would, in principle, be generally applicable to any situation requiring close monitoring of an ac supply voltage.
2. The circuit can be used to monitor two or more parallel ac power generators to prevent overloading of any one generator when a below normal output occurs.
3. Inquiries concerning details of the circuit may be directed to:

   Technology Utilization Officer
   Kennedy Space Center
   Kennedy Space Center, Florida 32899
   Reference: B68-10019

Patent status:

Inquiries about obtaining rights for the commercial use of this invention may be made to NASA, Code GP, Washington, D.C. 20546.

Source: W. H. Houck
(KSC-67-120)

Category 01

This document was prepared under the sponsorship of the National Aeronautics and Space Administration. Neither the United States Government nor any person acting on behalf of the United States Government assumes any liability resulting from the use of the information contained in this document, or warrants that such use will be free from privately owned rights.

NASA TECH BRIEF

NASA Tech Briefs are issued to summarize specific innovations derived from the U.S. space program, to encourage their commercial application. Copies are available to the public at 15 cents each from the Clearinghouse for Federal Scientific and Technical Information, Springfield, Virginia 22151.

Electronic "Aperture Control" Devised for Solid State Imaging System

An electronic means of performing the equivalent of automatic aperture control has been devised for the new class of television cameras that incorporates a solid state imaging device in the form of phototransistor mosaic sensors, as described in Tech Brief 66-10112. The control system enables the sensors to detect a useful gray scale, positioned over a wide range of viewing light levels, without requiring either variation of the lens opening or automatic gain control of a video amplifier. Operation of the system involves controlling the effective limits over which time integration of the light incident on each image point takes place in its corresponding sensor element.

In this system, variation of the integration period to give electronic aperture control is achieved by varying the system frame rate. Thus, a voltage controlled oscillator acting as the master clock for stepping the digitally sequenced interrogation circuits can be servo controlled from a separate video detector. This detector is matched to the entire frame so as to set the frame time to the proper interval for the average of all picture elements to reach an optimum video level. The upper limit of control, representing the highest light level to which the upper end of the system dynamic range can be set, is an integration period in which total discharging is caused by that intensity for which steady state photoresponse is more significant than the transient response. The dynamic range that can be displayed at this setting is limited by any mosaic commutator inaccuracies and nonlinearities of subsequent video processing circuits. The lower extreme is a frame time setting for which the discharging due to junction leakage is still insignificant compared to the lowest shade of gray in a useful range of light levels.

Control by varying the frame rate complicates the task of image reconstruction and display. With standard real time cathode ray tube display, the lower frame rates required for sensing at very dim light levels produce objectionable shading and flicker. However, many television applications for which this method of light level control is pertinent also involve recording of all video data before display. There are a number of scan conversion techniques for displaying slow-scan data at viewable raster rates which can be employed with this control system. (See for example Tech Brief B67-10676 "Scan Rate Converter for Tape Recording and Playback of TV Pictures.")

Notes:

1. Two alternative methods of electronic "aperture control" are: (1) control of the total charge in the sensor for light integration by varying the bias pulse amplitude to vary the range of useful input light; this method has the disadvantage of requiring video gain control; (2) control of the total available charge by varying either the charge time (readout period) or the charging impedance; this alternative method has some objectionable image holdover from frame to frame.
2. Inquiries concerning this invention may be directed to:

   Technology Utilization Officer
   Marshall Space Flight Center
   Huntsville, Alabama 35812
   Reference: B68-10028

Patent status:

Inquiries about obtaining rights for the commercial use of this invention may be made to NASA, Code GP, Washington, D.C. 20546.

(continued overleaf)

This document was prepared under the sponsorship of the National Aeronautics and Space Administration. Neither the United States Government nor any person acting on behalf of the United States Government assumes any liability resulting from the use of the information contained in this document, or warrants that such use will be free from privately owned rights.

Source: R. A. Anders, D. E. Callahan,
and D. H. McCann
of Westinghouse Electric Corporation
under contract to
Marshall Space Flight Center
(MFS-12428)

NASA TECH BRIEF

NASA Tech Briefs are issued to summarize specific innovations derived from the U.S. space program, to encourage their commercial application. Copies are available to the public at 15 cents each from the Clearinghouse for Federal Scientific and Technical Information, Springfield, Virginia 22151.

Simplified, High-Speed Binary Data Decoder

A simpler and faster decoder of encoded binary data received over a noisy channel is provided in a versatile apparatus that can accommodate more than one particular set of codes. The apparatus, which functions as a maximum likelihood, parallel, hybrid digital/analog/digital decoder, is applicable to satellite, lunar, and planetary data transmission.

The noisy signal is integrated by analog procedures deriving a confidence level per symbol. The received integrated analog symbol confidence levels are converted into digital form. The received and converted symbol values taken in groups constitute words. A received word is compared to all possible dictionary words, and a word correlation is established for each comparison. The word correlation value, which includes the originally derived confidence levels per symbol, is established in parallel by means of an analog summing network. Storing of the analog correlation values during the sorting operation (sorting for maximum correlation) is accomplished in the digital domain by first reconverting the analog correlation value to digital form.

This decoder has a number of advantages over conventional systems. Its high operating speed and small number of functional components are made possible by using parallel digital or parallel analog operation, whichever is optimum for the particular function involved. The decoder is not restricted to any special code and performs exhaustive searches through the entire code dictionary. In computing the correlation value, the decoder considers symbol confidence levels and integrates these over the word length, as opposed to algebraic bit-by-bit decoders. In sorting for maximum word correlation value, the error weight, computed in the analog domain, is reconverted to digital form so that it may be conveniently stored and sorted.

Note:

A complete description of this decoder may be obtained from:

Technology Utilization Officer
NASA Pasadena Office
4800 Oak Grove Drive
Pasadena, California 91103
Reference: B68-10058

Patent status:

This invention is owned by NASA, and a patent application has been filed. Royalty-free, nonexclusive licenses for its commercial use will be granted by NASA. Inquiries concerning license rights should be made to NASA, Code GP, Washington, D.C. 20546.

Source: Tage O. Anderson
Jet Propulsion Laboratory
(NPO-10118)

Category 01

This document was prepared under the sponsorship of the National Aeronautics and Space Administration. Neither the United States Government nor any person acting on behalf of the United States Government assumes any liability resulting from the use of the information contained in this document, or warrants that such use will be free from privately owned rights.

NASA TECH BRIEF

NASA Tech Briefs are issued to summarize specific innovations derived from the U.S. space program, to encourage their commercial application. Copies are available to the public at 15 cents each from the Clearinghouse for Federal Scientific and Technical Information, Springfield, Virginia 22151.

Thin Film Heat Transfer Gage Is Stable at Higher Temperatures

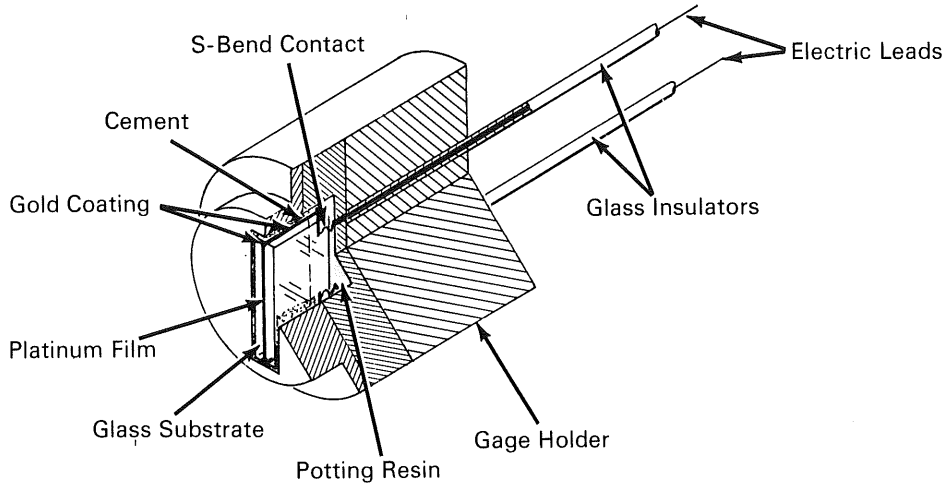

A new thin film convective heat transfer gage that has been designed will function effectively for prolonged periods at temperatures up to 1000° F. Previous designs which employ metal-to-glass seals for the electrical leads from the thin film sensing element (as in the rod and tube design summarized in Tech Brief 66-10180) are subject to failure at the higher temperatures. The failures are primarily due to rupture of the thin film under the stresses produced by the large difference in thermal expansion between the glass and metal leads in the earlier designs.

The new gage eliminates the problems due to differences in coefficient of thermal expansion between glass and metal by replacing the earlier metal-to-glass seals with spring-like (S-shaped) pressure contacts between a gold thin film deposit and electrical leads to the monitoring circuit. The gold thin film is formed by painting a commercial gold suspension (liquid gold) from both ends of the normal platinum thin film sensing element, around the sides of the glass substrate, and onto its back side to form a gold pad. Each of two S-shaped (0.010×0.002 inch) pieces of gold-plated Inconel-X wire is forced at one end into contact with the gold pad and at the other end is spot welded to an electrical lead. The two leads are made of a copper alloy whose thermal expansion coefficient matches that of the glass tubing used as electrical insulation for the leads. Potting material, which is placed around the S-shaped wires in the gage holder, is cured while the compressed spring condition of the S-bend is maintained in a small vise. An appropriate cement is used to secure the heat sensing assembly to a gage holder.

Notes:

1. The platinum film must be coated with silicon monoxide to prevent contamination by foreign materials under vacuum and high temperature.
2. An initial resistance shift does not inhibit the performance or accuracy of the gages, as the original resistance–temperature relationship remains unchanged.

(continued overleaf)

This document was prepared under the sponsorship of the National Aeronautics and Space Administration. Neither the United States Government nor any person acting on behalf of the United States Government assumes any liability resulting from the use of the information contained in this document, or warrants that such use will be free from privately owned rights.

3. The small effective surface area of the gage, 0.025 square inch, minimizes radiation losses.
4. The gage was designed for use in conjunction with a base which could be regulated to operate at any preselected temperature between 75° and 1000°F.
5. Inquiries concerning this convective thin film heat transfer gage may be directed to:

   Technology Utilization Officer
   Marshall Space Flight Center
   Huntsville, Alabama 35812
   Reference: B68-10051

Patent status:

No patent action is contemplated by NASA.

Source: R. F. Pickard and J. R. Loyd
of Astro-Space Laboratories, Inc.
under contract to
Marshall Space Flight Center
(MFS-12396)

NASA TECH BRIEF

NASA Tech Briefs are issued to summarize specific innovations derived from the U.S. space program, to encourage their commercial application. Copies are available to the public at 15 cents each from the Clearinghouse for Federal Scientific and Technical Information, Springfield, Virginia 22151.

Amplitude and Frequency Readout Overlay

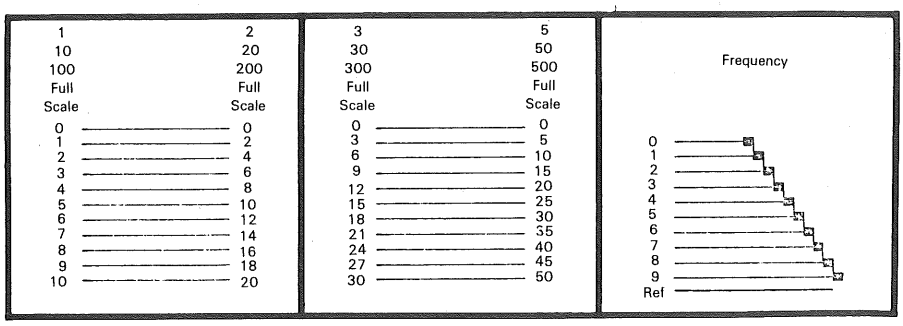

AMPLITUDE AND FREQUENCY READOUT OVERLAY
(1" = Full Scale Calibration)

The problem:

A simple method was required for measuring amplitudes and frequencies on oscillograph records. Oscillograph traces are generally calibrated for a full scale deflection of one inch and the reference frequency is recorded using a digital marker. Present methods for measuring amplitudes use (1) an engineering scale to measure trace deflections, and (2) the digital frequency code calibration at the beginning of the record to measure the frequencies of interest.

The solution:

An amplitude and frequency readout overlay was designed to simplify the interpretation of oscillograph traces for full scale deflections of one inch.

How it's done:

Amplitude. Select the scale on the overlay which corresponds with the one inch full scale calibration on the oscillograph record. Place the "0" line of the selected scale along one edge of the data envelope: read the level in peak "g's" directly off the scale where the opposite side of the envelope terminates.

Frequency. The digital coded frequency trace, which provides steps from 0 to 9 in a four decimal readout, must be calibrated to deflect 0.1 inch per step on the oscillograph record. The overlay is then placed over the coded trace and the frequency is read directly.

Notes:

1. This overlay will increase accuracy in data interpretation and save time in analyzing oscillograph records.
2. Inquiries concerning this innovation may be directed to:

   Technology Utilization Officer
   Goddard Space Flight Center
   Greenbelt, Maryland 20771
   Reference: B68-10054

Patent status:

No patent action is contemplated by NASA.

Source: A. E. Fitch
(GSC-10183)

(continued overleaf)

This document was prepared under the sponsorship of the National Aeronautics and Space Administration. Neither the United States Government nor any person acting on behalf of the United States Government assumes any liability resulting from the use of the information contained in this document, or warrants that such use will be free from privately owned rights.

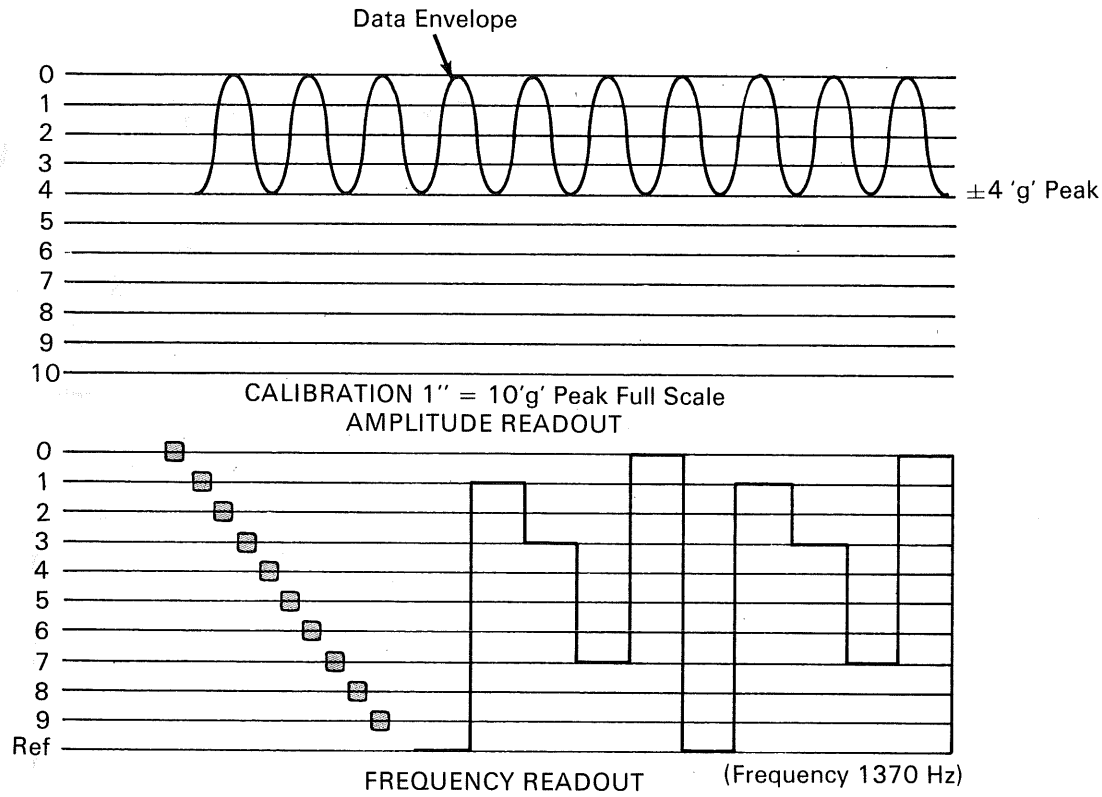
Data Envelope
0
1
2
3
4
5
6
7
8
9
10
±4 'g' Peak
CALIBRATION 1" = 10'g' Peak Full Scale
AMPLITUDE READOUT
0
1
2
3
4
5
6
7
8
9
Ref
FREQUENCY READOUT
(Frequency 1370 Hz)

NASA TECH BRIEF

NASA Tech Briefs are issued to summarize specific innovations derived from the U.S. space program, to encourage their commercial application. Copies are available to the public at 15 cents each from the Clearinghouse for Federal Scientific and Technical Information, Springfield, Virginia 22151.

Luminescent Screen Composition for Cathode Ray Tubes

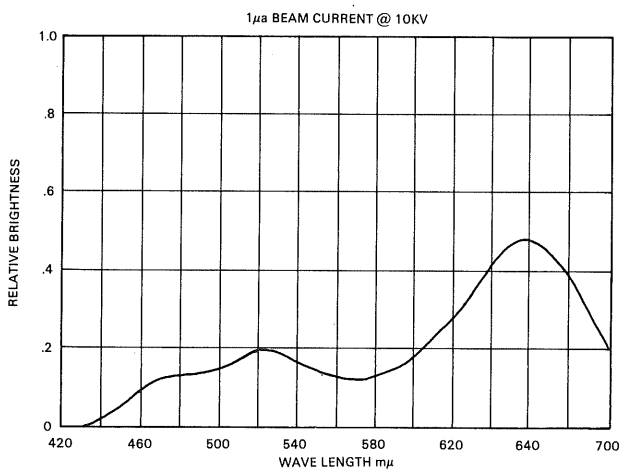

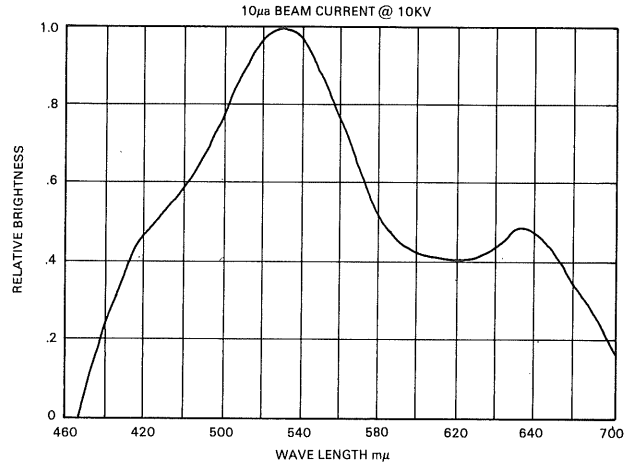

A screen composition for cathode ray tubes has been developed which exhibits differential color of emission as a function of beam current variation at a constant accelerating voltage. The screen consists of a mixture of phosphors which emit different hues, have different current saturation values and at least one of which exhibits a nonlinear current–brightness characteristic. At low beam current densities, the emission color of one of the phosphors predominates. As current density is increased, this phosphor reaches saturation, while the brightness of the second phosphor continues to increase so as to effectively mask the emission color of the first phosphor.

The lack of emission of this second phosphor at low current densities results from the intentional incorporation of poisoning elements such as nickel, and is particularly effective with ZnS:CdS systems. Thus, by mixing a nonlinear ZnS:CdS phosphor with any of a number of linear phosphors having limited activator content so that they will saturate at low current values, a number of color combinations become possible.

For example, a nonlinear sulfide green may be mixed with a linear red phosphor. When an electron beam of 1.0 microampere per square centimeter at 10 kilovolts is applied, the red will predominate. On the left figure it can be seen that there is relatively little green component and considerable red component, as evidenced by the peak in the 640 millimicron range. When the electron beam current is increased to 10 microamperes per sq cm at 10 kilovolts, the red phosphor saturates while the green component increases, as is evidenced in the right figure where there is now a peak in the 520–560 millimicron range, overpowering the 640 millimicron peak.

This arrangement is particularly useful when a display gradient is important, as an automatic alert, in which displayed values representing normal circumstances may be green. As conditions progress from

(continued overleaf)

This document was prepared under the sponsorship of the National Aeronautics and Space Administration. Neither the United States Government nor any person acting on behalf of the United States Government assumes any liability resulting from the use of the information contained in this document, or warrants that such use will be free from privately owned rights.

normal to abnormal, the beam current may be programmed to lower values so that the color rendition is modified to include overlapping color display, i.e., amber. Then, if circumstances become seriously abnormal, the beam current may be programmed to even lower values so that the red will now predominate, providing an immediate alert to the observer. Modulation may also be effected with other phosphor mixtures, so that red requires the higher beam current.

Notes:

1. This screen would also be useful in multiple gun tubes and would obviate the present requirement in such tubes of positioning dots of the three additive primary colors (red, green, and blue). Additionally, since no registration problems would occur, the spacing and diameter of the openings in the aperture mask could be made an order of magnitude closer and finer, respectively. In such a tube, by merely biasing the individual guns to different values, the resultant differential beam intensities would yield the appropriate colors wherever the individual beams impinged on the screen. Relative brightness of the primaries would be controlled by variation in duty cycle.
2. Inquiries concerning this invention may be directed to:

   Technology Utilization Officer
   Electronics Research Center
   575 Technology Square
   Cambridge, Massachusetts 02139
   Reference: B68-10056

Patent status:

Inquiries about obtaining rights for the commercial use of this invention may be made to NASA, Code GP, Washington, D.C. 20546.

Source: Edwin H. Hilborn
(ERC-19)

NASA TECH BRIEF

NASA Tech Briefs are issued to summarize specific innovations derived from the U.S. space program, to encourage their commercial application. Copies are available to the public at 15 cents each from the Clearinghouse for Federal Scientific and Technical Information, Springfield, Virginia 22151.

Thermal Short Improves Sensitivity of Cryogenically Cooled Maser

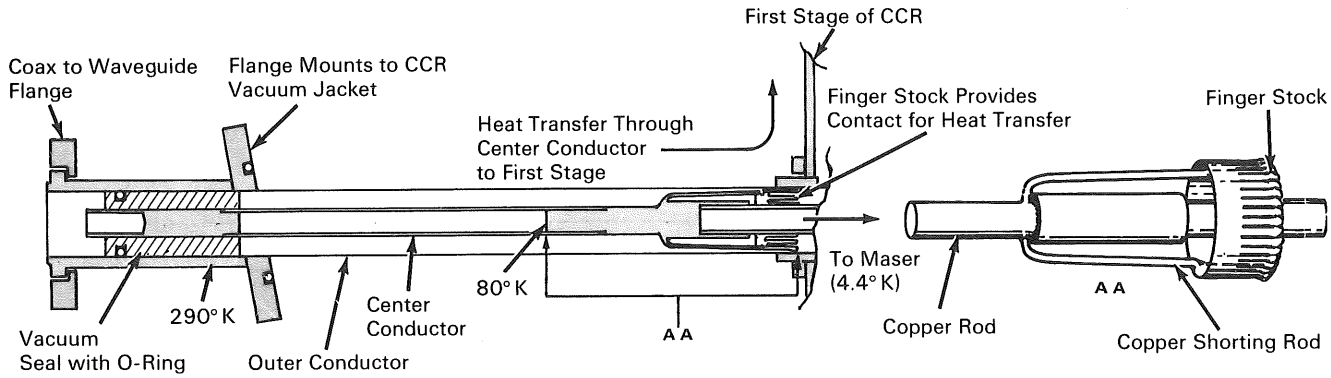

SIGNAL INPUT COAXIAL LINE ASSEMBLY IN-LINE QUARTER-WAVE THERMAL SHORT

An in-line, quarter-wave thermal short has been designed to cool the center conductor of the signal-input coaxial transmission line to a cryogenically cooled traveling wave maser. This device has two important advantages in that it reduces both the thermal noise contribution of the coaxial line and the heat leak through the center conductor to the maser at 4.4° K. The ambient insertion loss of the short is 0.011 dB. When cooled to 80° K, the device contributes less than 0.1° K to the maser noise temperature.

The first figure shows the thermal short installed in the transmission line and the manner in which heat is transferred through the center conductor into the closed-cycle refrigerator (CCR). Refrigeration at the first stage is sufficient to cool the center conductor from ambient temperature (290° K) to 80° K along a 4-inch length. The thermal short (second figure) which is inserted into the transmission line, is of such configuration that the heat from the inner conductor is conductively transferred (at the rate of 400 mw) through copper shorting rods to a finger stock contact to the outer conductor. The addition of the thermal short does not change the electrical characteristics of the line, having little effect on the VSWR over a 25% bandwidth.

Notes:

1. The entire center conductor can be removed (to replace the vacuum seal) in the field without disassembly of the refrigerator.
2. Additional technical details are contained in JPL Space Programs Summary No. 37-40, Vol. III, pages 90–93. Inquiries may also be directed to:

   Technology Utilization Officer
   NASA Pasadena Office
   4800 Oak Grove Drive
   Pasadena, California 91103
   Reference: B68-10059

Patent status:

This invention is owned by NASA, and a patent application has been filed. Royalty-free, nonexclusive licenses for its commercial use will be granted by NASA. Inquiries concerning license rights should be made to NASA, Code GP, Washington, D.C. 20546.

Source: Robert C. Clauss
Jet Propulsion Laboratory
(NPO-09975)
Category 01

This document was prepared under the sponsorship of the National Aeronautics and Space Administration. Neither the United States Government nor any person acting on behalf of the United States Government assumes any liability resulting from the use of the information contained in this document, or warrants that such use will be free from privately owned rights.

NASA TECH BRIEF

NASA Tech Briefs are issued to summarize specific innovations derived from the U.S. space program, to encourage their commercial application. Copies are available to the public at 15 cents each from the Clearinghouse for Federal Scientific and Technical Information, Springfield, Virginia 22151.

Electronic Circuit Provides Automatic Level Control for Liquid Nitrogen Traps

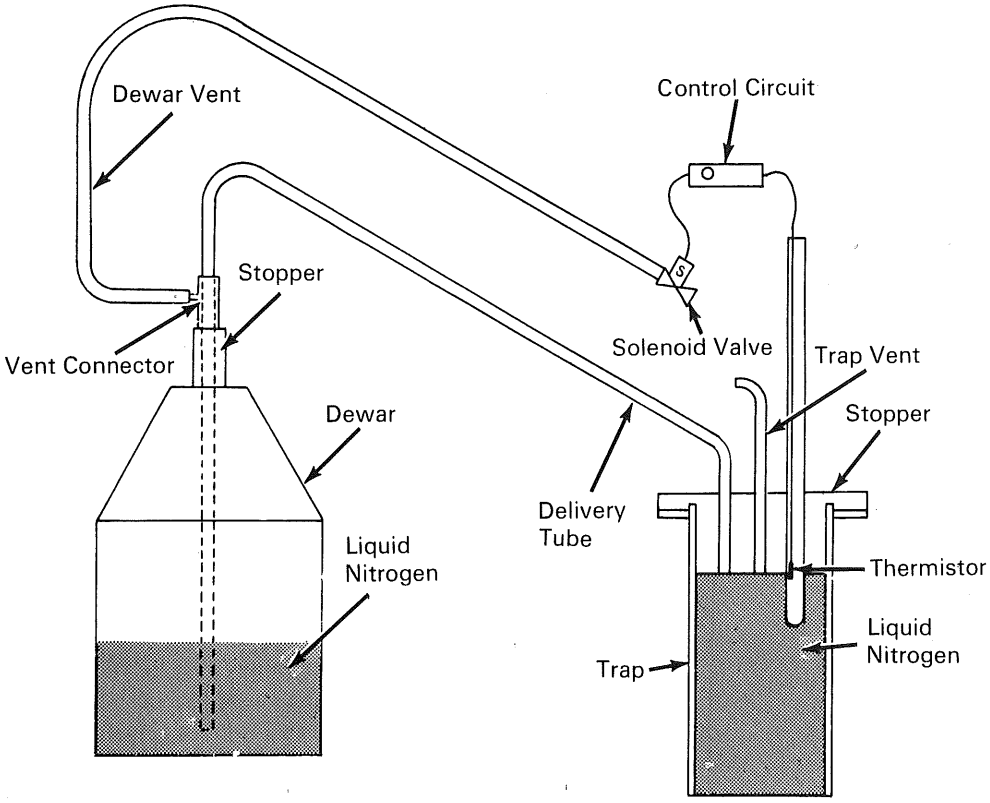

The problem:

To provide an automatic level control for liquid nitrogen cold traps. These traps are used with mass spectrometers, leak detectors, and other high-vacuum devices requiring traps to promote greater efficiency in diffusion pump operation. In the past, the liquid nitrogen levels have been mechanically controlled by a glass tube partially filled with mercury and methane. Although such systems operate satisfactorily at first, they require frequent cleaning and refilling.

The solution:

An electronic control of the liquid nitrogen levels, based on the principle of increased thermistor resistance corresponding to decreases in temperature. The electronically controlled apparatus is practically service-free, requiring only occasional reliability checks. It

(continued overleaf)

This document was prepared under the sponsorship of the National Aeronautics and Space Administration. Neither the United States Government nor any person acting on behalf of the United States Government assumes any liability resulting from the use of the information contained in this document, or warrants that such use will be free from privately owned rights.

also eliminates the time-consuming and hazardous handling of glassware and liquid mercury.

How it's done:

The trap is filled by pressurizing the Dewar using ambient heating. The solenoid valve is in its normally closed position, so that the pressure forces the liquid nitrogen through the delivery tube. As the trap fills, the thermistor (TH_1), which is located at the desired trap level, is chilled by the liquid nitrogen. The thermistor resistance increases rapidly as it cools, causing the base of NPN transistor Q_1 to become more positive. When the base of Q_1 reaches a predetermined potential, the transistor conducts a current which energizes relay K_1, closing switch S_2. The resulting current through relay K_2 activates the solenoid valve which opens the Dewar ventline, stopping the pumping action at the desired trap level.

Notes:

1. This device should be useful in the chemical process industries where constant liquid levels must be maintained at low temperatures such as in nitration mixtures, standard low-temperature baths, and refrigerants.
2. This invention may be of interest to manufacturers of cryogenic equipment.
3. Inquiries concerning this invention may be directed to:

   Technology Utilization Officer
   John F. Kennedy Space Center
   Kennedy Space Center, Florida 32899
   Reference: B68-10061

Patent status:

Inquiries about obtaining rights for the commercial use of this invention may be made to NASA, Code GP, Washington, D.C. 20546.

Source: Roscoe R. Turvy
(KSC-10127)

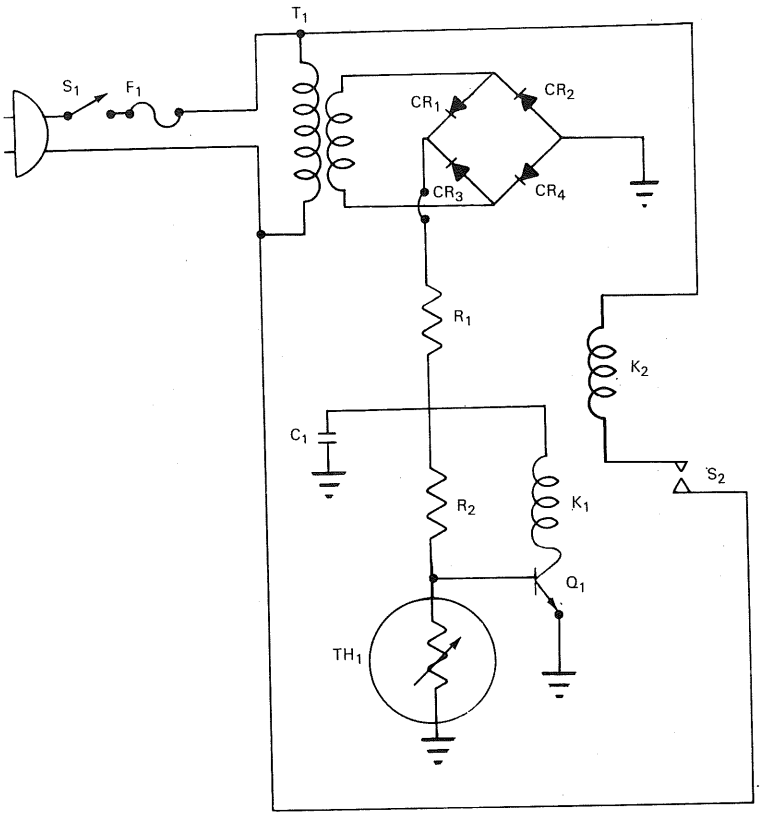

CONTROL CIRCUIT

NASA TECH BRIEF

NASA Tech Briefs are issued to summarize specific innovations derived from the U.S. space program, to encourage their commercial application. Copies are available to the public at 15 cents each from the Clearinghouse for Federal Scientific and Technical Information, Springfield, Virginia 22151.

Plastic Preforms Facilitate Fabrication of Welded Cordwood Electronic Modules

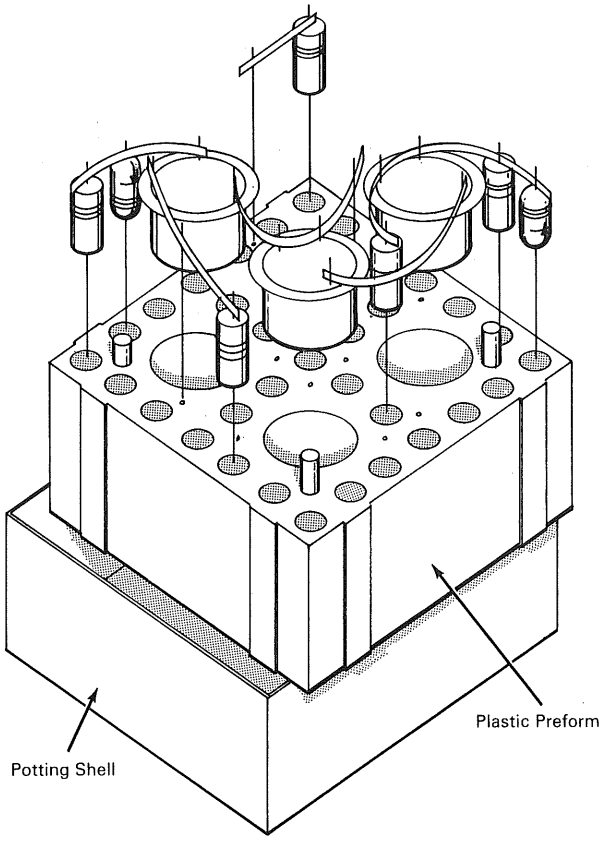

A reliable method has been developed to facilitate the fabrication of small lots (prototypes, experimental circuits, and other limited production quantities) of welded cordwood circuits. The essential feature of this method is the use of a molded plastic preform, or nesting jig, which retains the components during welding and electrical checkout. The preform also facilitates encapsulation of the welded module when used with a conventional potting shell. As the preform and shell provide considerable structural support for the components, relatively soft resins can be used as encapsulants, thus permitting modifications or repairs to be readily made.

Large holes in the preform are for transistors. Axial lead components fit in the smaller holes, which are molded with lands at one end to retain the components during the welding operation. Although not a desirable operation, drilling out a few holes when

(continued overleaf)

This document was prepared under the sponsorship of the National Aeronautics and Space Administration. Neither the United States Government nor any person acting on behalf of the United States Government assumes any liability resulting from the use of the information contained in this document, or warrants that such use will be free from privately owned rights.

necessary for slightly larger components eliminates the sloppy fits which would result if larger holes were originally molded in the preform. Drilled holes are also used for feedthrough of wires, since the holes are too small to be economically molded in the preform. Projections on the faces and sides of the preform allow it to be centered in the potting shell and ensure proper flow of encapsulant.

Note:

Complete details can be obtained from:

Technology Utilization Officer
Lewis Research Center
21000 Brookpark Road
Cleveland, Ohio 44135
Reference: B68-10063

Patent status:

No patent action is contemplated by NASA.

Source: John C. Sturman
(LEW-90339)

NASA TECH BRIEF

NASA Tech Briefs are issued to summarize specific innovations derived from the U.S. space program, to encourage their commercial application. Copies are available to the public at 15 cents each from the Clearinghouse for Federal Scientific and Technical Information, Springfield, Virginia 22151.

Multichannel Implantable Telemetry System

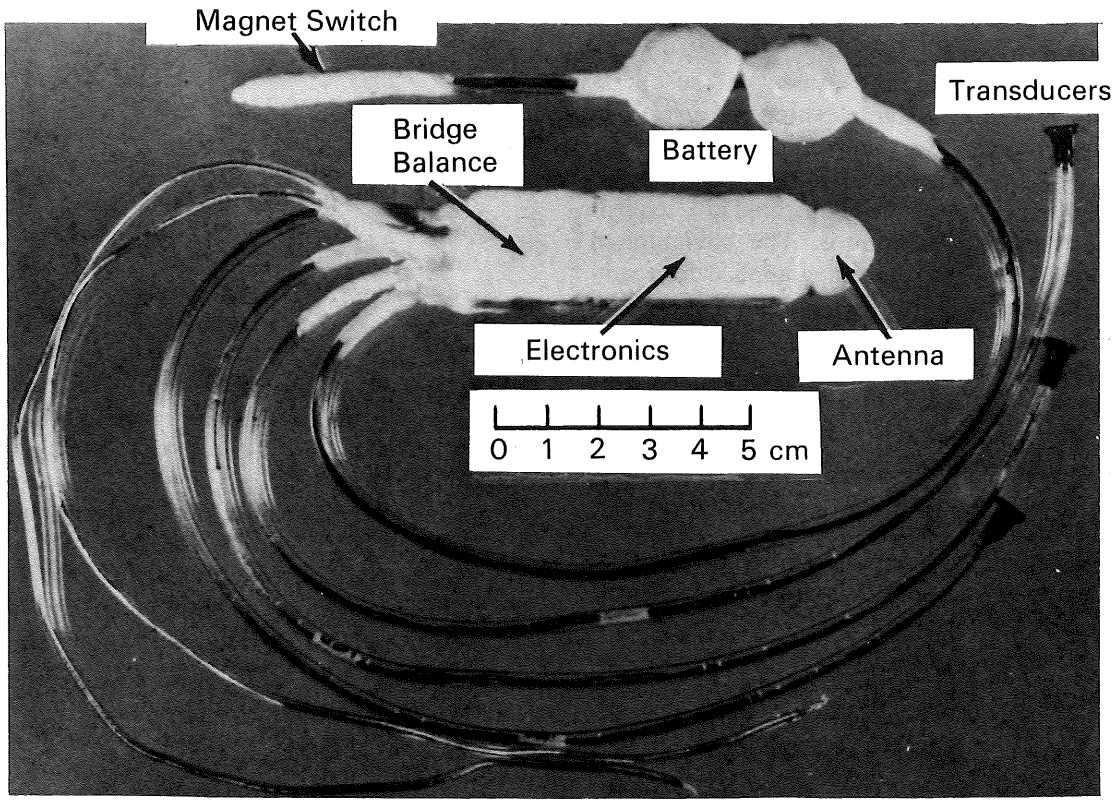

The problem:

To develop a multichannel telemetry system suitable for chronic implantation in animals to monitor a variety of physiological parameters. It is desirable to design the system such that the number of channels can easily be increased or decreased depending upon the requirements of the experimenter.

The solution:

A hermetically sealed unit using a time-sharing multiplex scheme to commutate between various sensor inputs. To date experiments requiring multiple pressure sensors, EKG, and temperature have been accommodated. Units having 5 and 8 channels have been built and tested. The essential features of small size and low power required for implantable physiological telemetry have been achieved without sacrificing accuracy and reliability.

How it's done:

The telemetry system is shown as a block diagram. The upper section of the figure shows the implanted

(continued overleaf)

This document was prepared under the sponsorship of the National Aeronautics and Space Administration. Neither the United States Government nor any person acting on behalf of the United States Government assumes any liability resulting from the use of the information contained in this document, or warrants that such use will be free from privately owned rights.

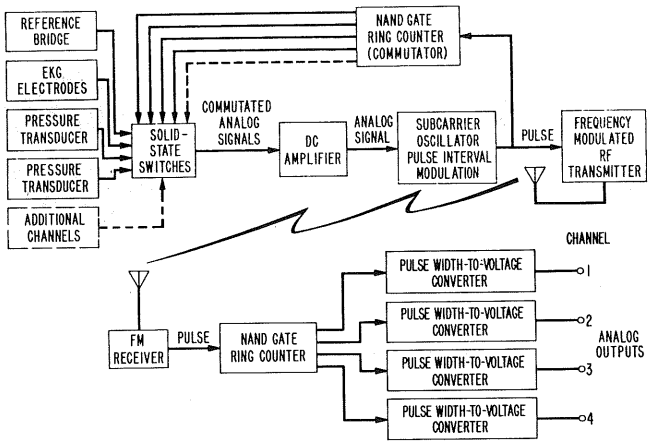

transmitter part of the system. The lower part of the figure is the receiving and demodulating equipment that provides an analog signal suitable as an input to a pen recorder.

The ring counter is the key element in the operation of this multichannel transmitter. A *nand* gate ring counter is used as a commutator to operate a series of solid-state switches. There is one switch for each input channel and these are operated in a sequential manner by the commutator. The commutated signal is amplified slightly and then applied to a subcarrier oscillator. The subcarrier oscillator is used in the system to allow accurate coding of the signal for RF transmission. The subcarrier oscillator generates a series of pulses with a period between pulses of approximately 0.7 msec. Each pulse generated by the oscillator is used to advance the ring counter and the solid-state switch one position to sample the next analog input. The oscillator pulses are also used to frequency modulate an RF oscillator. The RF signal is then radiated by means of an antenna to the receiving system.

Each sensor is connected to the transmitter by lead wires contained in medical grade tygon tubing. Another tygon-covered lead connects to the battery and a magnetic latching switch, which are usually placed just under the skin of the animal, to facilitate operation of the switch and renewal of battery. With this arrangement, long-term (1–2 year) telemetry experiments are possible.

Notes:

1. One of the multiple channels is used for reference and calibration purposes to obtain long-term system accuracy and stability.
2. The basic operation, except for the addition of a multichannel capability by means of a commutating switch, is similar to that of single-channel circuits that have been described in NASA Tech Briefs 64-10171, 66-10057, and 66-10624. These Tech Briefs are available from the Clearinghouse for Federal Scientific and Technical Information, Springfield, Virginia 22151; price $0.15 each.
3. The following is a summary of the major system performance characteristics:
   Number of channels—Systems with five and eight channels have been tested, but the system can easily be adapted to more or less channels.
   Sample rate—Approximately 0.7 msec per channel.
   Frequency response—DC to 50 Hz.
   Transient response—5 to 7 msec for five-channel system.
   Input impedance—Suitable for 5K strain-gage bridges, or approximately 150K when used with biopotentials such as EKG.
   Noise level—Less than 20μV peak to peak, including cross-modulation
   Radio frequency—88–108 MHz.
   Power supply—2.7 V(2 mercury cells).
   Battery drain—Approximately 2.5 ma for the transmitter system. (The total current required by the three pressure cells and reference bridge used in this instance is 1 ma.)
   Operating life—200 hours continuous operation using a 500 ma-hr battery.
   Size—Transmitter (independent of battery and transducers) approximately 1 cm by 2 cm by 8 cm.
   Weight—Transmitter, 70 gm. (Two 500-ma-hr mercury cells (pacemaker type); 16gm.)
4. The size and weight could be reduced further by using integrated circuitry.
5. An encapsulated transmitter has been implanted in a dog and heart measurements have been successfully telemetered to a distance of 200 feet.
6. Additional details are contained in a paper, *A Multichannel Implantable Telemetry System,* by Thomas B. Fryer, Harold Sandler, and Boris Datnow, which was presented at the 7th International Conference on Medical and Biological Engineering, August 15–19, 1967, Stockholm, Sweden. Copies of this paper are available from:
   Technology Utilization Officer
   Ames Research Center
   Moffett Field, California 94035
   Reference: B68-10065

Patent status:

This invention is owned by NASA, and a patent application has been filed. Royalty-free, nonexclusive licenses for its commercial use will be granted by NASA. Inquiries concerning license rights should be made to NASA, Code GP, Washington, D.C. 20546.

Source: T. B. Fryer
(ARC-10083)

NASA TECH BRIEF

NASA Tech Briefs are issued to summarize specific innovations derived from the U.S. space program, to encourage their commercial application. Copies are available to the public at 15 cents each from the Clearinghouse for Federal Scientific and Technical Information, Springfield, Virginia 22151.

Diversity RF Receiving System with Improved Phase-Lock Characteristics

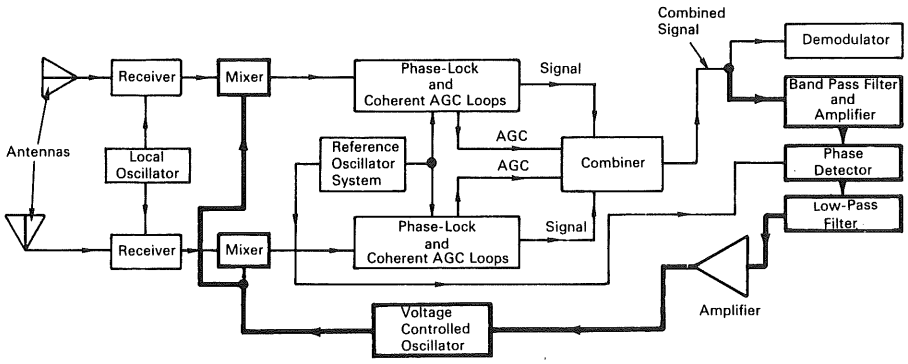

An improved diversity receiving system automatically utilizes the combined output from its two independent receiving channels (with cross-polarized receiving antennas) in such a way as to increase the reliability of maintaining the requisite phase lock for optimum signal reception. This system is adapted for use with AM, PM, or narrow band FM signals.

The combined signal output from the two receivers is applied to a primary phase-lock loop (shown by heavier lines in the block diagram). In this loop, the phase of the combined signal is compared with the phase of a reference signal, and an error voltage proportional to the phase difference is developed. This error voltage is used to vary the frequency of a voltage controlled oscillator, which in turn has its output signal heterodyned with the input signal in each of the receiving channels. In this manner, the primary phase-lock loop permits the system to track changes common to both receiving channels so that frequency variations, such as those due to Doppler shifts, are followed. Two secondary phase-lock, coherent automatic gain control loops in the individual receiving channels compensate for differential signal changes in these channels, and thus assure the phase coherence necessary for optimum combining.

The primary phase-lock loop includes a phase detector which receives signals from the reference oscillator system; a band pass filter and amplifier; a voltage controlled oscillator connected to the phase detector via a low-pass filter and an amplifier; and two mixers connected to the two receiving channels.

Note:

Inquiries concerning this system may be directed to:

Technology Utilization Officer
Goddard Space Flight Center
Greenbelt, Maryland 20771
Reference: B68-10068

Patent status:

This invention has been patented by NASA (U.S. Patent No. 3,348,152), and royalty-free license rights will be granted for its commercial development. Inquiries about obtaining a license should be addressed to NASA, Code GP, Washington, D.C. 20546.

Source: C. R. Laughlin, Jr. and V. J. Di Losa
(XGS-01222)

Category 01

This document was prepared under the sponsorship of the National Aeronautics and Space Administration. Neither the United States Government nor any person acting on behalf of the United States Government assumes any liability resulting from the use of the information contained in this document, or warrants that such use will be free from privately owned rights.

NASA TECH BRIEF

NASA Tech Briefs are issued to summarize specific innovations derived from the U.S. space program, to encourage their commercial application. Copies are available to the public at 15 cents each from the Clearinghouse for Federal Scientific and Technical Information, Springfield, Virginia 22151.

Principles of Optical-Data Processing Techniques

There is currently an abundance of literature on all phases of optical-data processing but the bulk of it is written at an advanced level (as for theoretical physicists) with the assumption that readers are familiar with all basic principles. For an engineer interested in, or perhaps required to gain an understanding in this new field and its many related disciplines, this can pose a formidable problem.

A document has been prepared which is restricted to a level which will convey the basic principles involved to those having a general technical background. Mathematical discussions are included but are not required for a basic understanding, however they serve as introduction to more advanced texts for those interested in pursuing the subject matter in greater detail. A section on fundamental principles of optics provides guidelines for selection of those principles to be pursued in a given study. The document also indicates those disciplines that must be mastered before a complete working knowledge can be achieved, including optics, photography, mathematics, electronics, and holography as related to optical-data processing. The document provides a sound basis for understanding most state-of-the-art developments in the field of optical data processing.

Note:

Copies of this document may be requested from:
Technology Utilization Officer
Goddard Space Flight Center
Greenbelt, Maryland 20771
Reference: B68-10069

Patent status:

No patent action is contemplated by NASA.

Source: A. R. Shulman
(GSC-10271)

Category 01

This document was prepared under the sponsorship of the National Aeronautics and Space Administration. Neither the United States Government nor any person acting on behalf of the United States Government assumes any liability resulting from the use of the information contained in this document, or warrants that such use will be free from privately owned rights.

NASA TECH BRIEF

NASA Tech Briefs are issued to summarize specific innovations derived from the U.S. space program, to encourage their commercial application. Copies are available to the public at 15 cents each from the Clearinghouse for Federal Scientific and Technical Information, Springfield, Virginia 22151.

New Microelectronic Power Amplifier

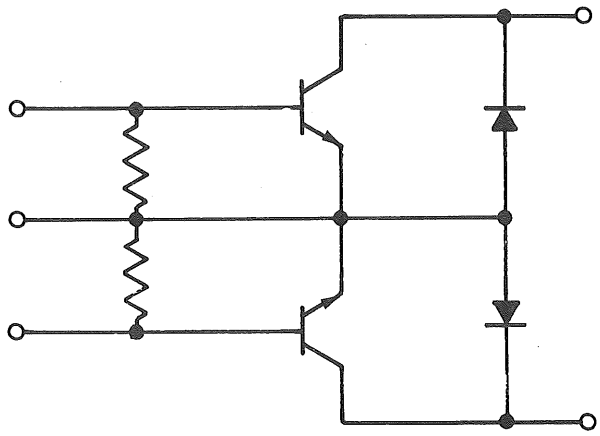

An integrated push–pull power amplifier has been fabricated on a chip of silicon measuring 0.250×0.450 inch. The power transistors are interdigitated, and occupy 80 percent of the area. The remaining 20 percent of the area is occupied by the resistors and diodes. The device is hermetically encapsulated in a beryllia flat package. Beryllia was chosen over other ceramics because of its high thermal conductivity, high electrical resistivity, and high dielectric strength. Although the amplifier was required to provide a nominal output of 10 amperes from an input current drive of 1 ampere, it is capable of current outputs several times greater than the nominal value. The dc supply is 28 volts. Operating temperature is from −55° to +150°C.

A limited number of the devices were fabricated and tested for electrical performance under severe environmental conditions and were found to be satisfactory in all respects. Because of the small number tested, statistically significant data on reliability or mean time between failures are not available.

Notes:

1. This power amplifier is believed to be a significant development in silicon integrated devices.
2. The basic device should serve as a prototype for volume production in view of the large number of applications for push–pull power transistors for either switching or amplifying. The design provides flexibility for scaling either upward or downward depending on the power dissipation requirements.
3. Additional details may be obtained from:
   Technology Utilization Officer
   Marshall Space Flight Center
   Huntsville, Alabama 35812
   Reference: B68-10073

Patent status:

No patent action is contemplated by NASA.

Source: T. C. New
of Westinghouse Electric Corporation
under contract to
Marshall Space Flight Center
(MFS-13621)
Category 01

This document was prepared under the sponsorship of the National Aeronautics and Space Administration. Neither the United States Government nor any person acting on behalf of the United States Government assumes any liability resulting from the use of the information contained in this document, or warrants that such use will be free from privately owned rights.

NASA TECH BRIEF

NASA Tech Briefs are issued to summarize specific innovations derived from the U.S. space program, to encourage their commercial application. Copies are available to the public at 15 cents each from the Clearinghouse for Federal Scientific and Technical Information, Springfield, Virginia 22151.

Magnetic Tape Transport Controlled by Rotating Transducer Heads

A magnetic tape transport has been designed to include a common drive for both the tape drive capstan and the rotating record/reproduce heads. Speed of the drive may be varied within a preselected range, but, once selected, remains constant so that head and capstan are driven in synchronization and at constant speed for the duration of the operating mode selected. To ensure correct tracking by the heads, tape speed is varied by controlled tension on the tape between capstan and supply reel by a braking device on the supply reel. For time-base expansion playback at low speed, a flywheel on the motor, capstan, and head drive shaft provides more constant speed. Switching of the heads is accomplished by circuitry mounted on the head drum and the low-speed reproduce signal is amplified by additional circuitry mounted on the head drum in order to improve the signal-to-noise ratio at the lower speed.

The tape is guided from the supply reel by conventional means into a transversely curved concentric relation to a head drum so the heads successively sweep the width of the tape as the head drum rotates. Synchronization between head drum and tape capstan is achieved through a worm drive formed by threads on one shaft from the drive motor engaging a gear on the capstan and by a second shaft, from the opposite end of the drive motor, on which the head drum is mounted. To assure that the heads correctly track on the tape during the playback mode, regardless of dimensional changes that may have occurred subsequent to recording, a tachometer operates in conjunction with a light source, photocell, and electronic circuitry to impress a control track on the tape by means of a transducer on the head drum during the record mode. A second transducer "reads" this control track during playback and varies the torque of a braking motor coupled to the supply reel to vary tension on the tape. This physically stretches or relaxes the tape to alter the mass rate of flow of the tape past the capstan even though the capstan speed remains constant.

Notes:

1. This system eliminates the need for the usual capstan motor and associated servo control circuitry. The recorder also combines 1500 ips record/reproduce and 30 ips reproduce in a single head.
2. Inquiries concerning this invention may be directed to:

   Technology Utilization Officer
   Goddard Space Flight Center
   Greenbelt, Maryland 20771
   Reference: B68-10079

Patent status:

Title to this invention has been waived under the provisions of the National Aeronautics and Space Act [42 U.S.C. 2457 (f)], to the Ampex Corporation, 934 Charter Street, Redwood City, California.

Source: John D. Sperry, Joseph Chupity, and Guido Salcedo
of the Ampex Corporation
under contract to
Goddard Space Flight Center
(GSC-483)

Category 01

This document was prepared under the sponsorship of the National Aeronautics and Space Administration. Neither the United States Government nor any person acting on behalf of the United States Government assumes any liability resulting from the use of the information contained in this document, or warrants that such use will be free from privately owned rights.

NASA TECH BRIEF

NASA Tech Briefs are issued to summarize specific innovations derived from the U.S. space program, to encourage their commercial application. Copies are available to the public at 15 cents each from the Clearinghouse for Federal Scientific and Technical Information, Springfield, Virginia 22151.

Gyrator-Type Circuits Replace Ungrounded Inductors

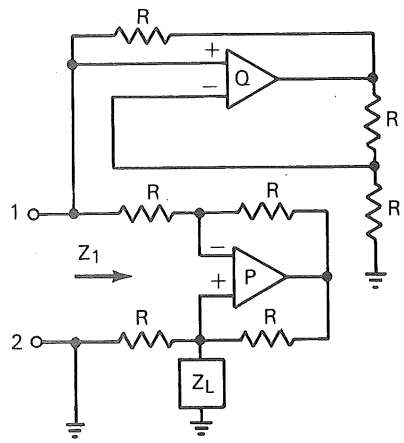

TWO-AMPLIFIER GYRATOR
(CIRCUIT NO.1)

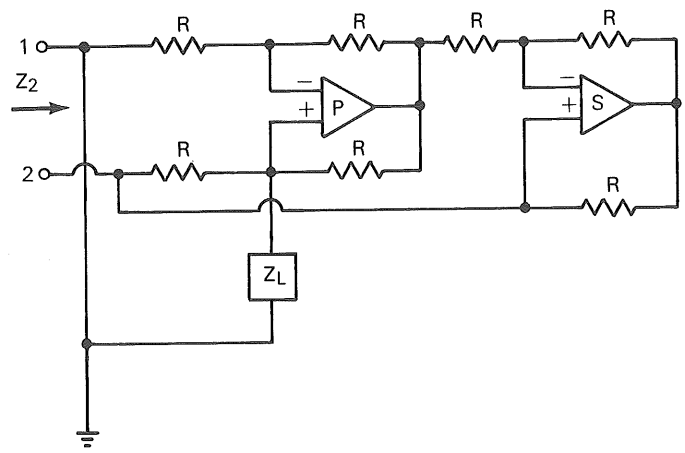

TWO-AMPLIFIER GYRATOR
(CIRCUIT NO. 2)

The problem:

To design an electronic circuit that does not use inductors, yet will perform the same function as one using inductors. The purpose is to permit complete microminiaturization of circuitry by integration of the components, since inductors having values in excess of a few microhenries are difficult, if not impossible, to integrate.

The solution:

Gyrator circuits using only transistors, capacitors, and resistors which can replace both grounded and ungrounded inductors. Circuits having effective inductances of hundreds of henries have been successfully built. Filters utilizing these circuits have achieved frequency responses closer to the ideal than circuits with real inductors.

How it's done:

Two gyrator circuits were designed using two operational amplifiers in each. Each can be used to simulate a grounded inductor. Normally, an ungrounded inductor would be replaced by two gyrators and a capacitor, for a total of four amplifiers in the circuit. However, when these two gyrators are combined and terminated with a capacitor, only three operational amplifiers are required.

Notes:

1. Additional details are contained in: *Application of a Gyrator-Type Circuit to Ungrounded Inductors,* by Gordon J. Deboo, IEEE Transactions on Circuit Theory, vol. CT-14, no. 1, p. 101–102, March 1967.
2. Another solution to the problem, based on a totally different design philosophy is given in NASA Tech Brief 66-10309, available from the Clearinghouse for Federal Scientific and Technical Information, Springfield, Virginia 22151; price $0.15.

(continued overleaf)

This document was prepared under the sponsorship of the National Aeronautics and Space Administration. Neither the United States Government nor any person acting on behalf of the United States Government assumes any liability resulting from the use of the information contained in this document, or warrants that such use will be free from privately owned rights.

3. Inquiries concerning these circuits may be directed to:

Technology Utilization Officer
Ames Research Center
Moffett Field, California 94035
Reference: B68-10084

Patent status:

This invention is owned by NASA, and a patent application has been filed. Royalty-free, nonexclusive licenses for its commercial use will be granted by NASA. Inquiries concerning license rights should be made to NASA, Code GP, Washington, D.C. 20546.

Source: Gordon J. Deboo
(XAC-10608)

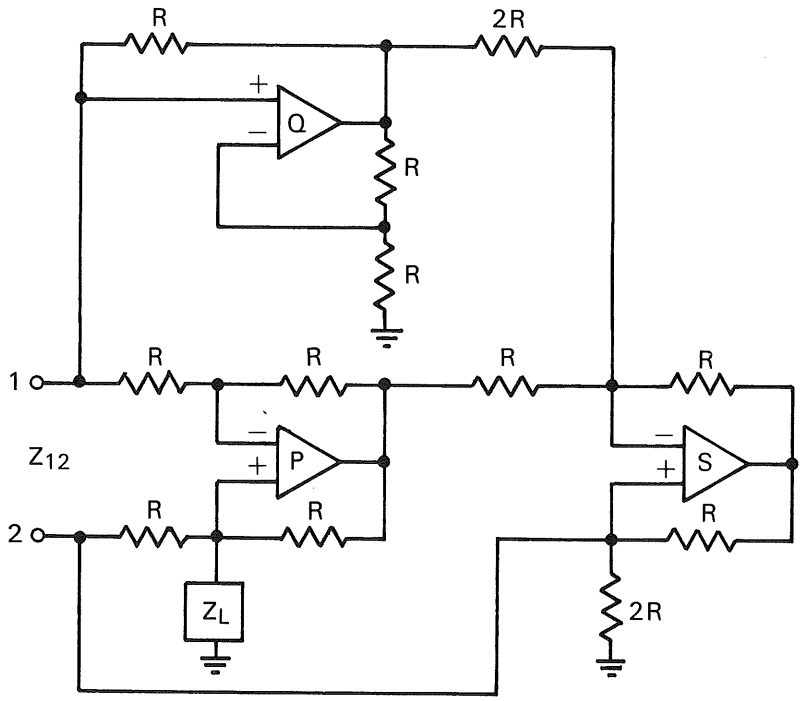

COMBINED GYRATOR CIRCUIT

NASA TECH BRIEF

NASA Tech Briefs are issued to summarize specific innovations derived from the U.S. space program, to encourage their commercial application. Copies are available to the public at 15 cents each from the Clearinghouse for Federal Scientific and Technical Information, Springfield, Virginia 22151.

Monitor Senses Amount of Contamination Deposited on Surfaces

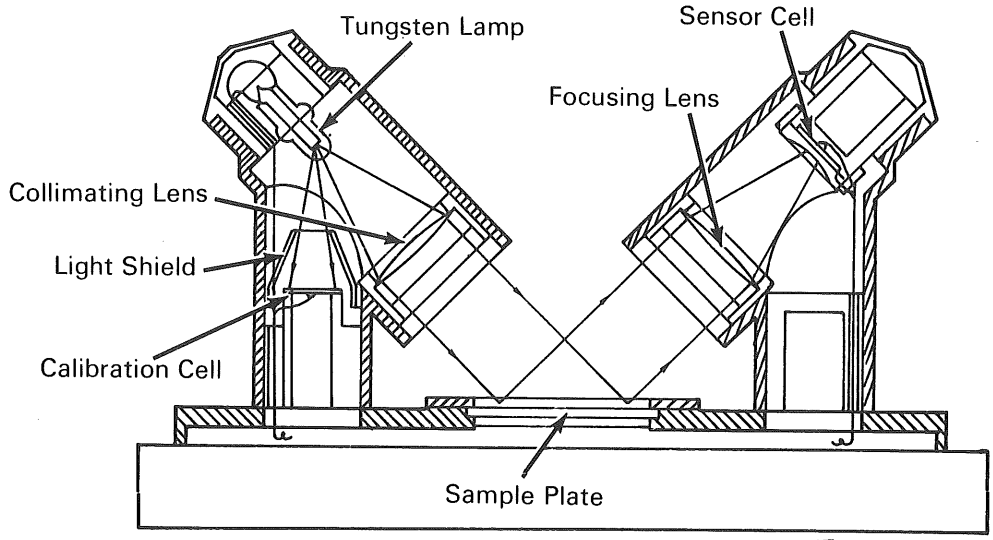

A monitoring device has been developed that detects and indicates directly the amount of contamination deposited on a given surface. The monitor uses an optical system in conjunction with a reliable collimated light source and associated electronics.

In operation, light from the tungsten lamp is projected through a collimating lens onto the sample plate and the resultant reflected image passes through a second (focusing) lens that focuses the image to illuminate a restricted area (two millimeters in diameter) of a silicon sensor cell. The output signal from the sensor cell is proportional to the output signal from the light source. An additional silicon sensor cell is located in the tungsten lamp housing to continually sample the lamp output for the purpose of calibration. Any change in the monitor output signal is proportional to change in the optical absorption characteristics of the sample plate surface.

Sequence sampling of the monitor signal and the calibration signal is 4.8 seconds, consisting of 15 signal readouts and 15 calibration readouts every sequence. A flip-flop within the electronics provides continual sampling of either signal or calibration during operation.

Note:

Inquiries concerning this invention may be directed to:

Technology Utilization Officer
Goddard Space Flight Center
Greenbelt, Maryland 20771
Reference: B68-10089

Patent status:

Inquiries about obtaining rights for the commercial use of this invention may be made to NASA, Code GP, Washington, D.C. 20546.

Source: Robert N. Sheehy
(GSC-10212)

Category 01

This document was prepared under the sponsorship of the National Aeronautics and Space Administration. Neither the United States Government nor any person acting on behalf of the United States Government assumes any liability resulting from the use of the information contained in this document, or warrants that such use will be free from privately owned rights.

NASA TECH BRIEF

NASA Tech Briefs are issued to summarize specific innovations derived from the U.S. space program, to encourage their commercial application. Copies are available to the public at 15 cents each from the Clearinghouse for Federal Scientific and Technical Information, Springfield, Virginia 22151.

Automatic Contour Welder Incorporates Speed Control System

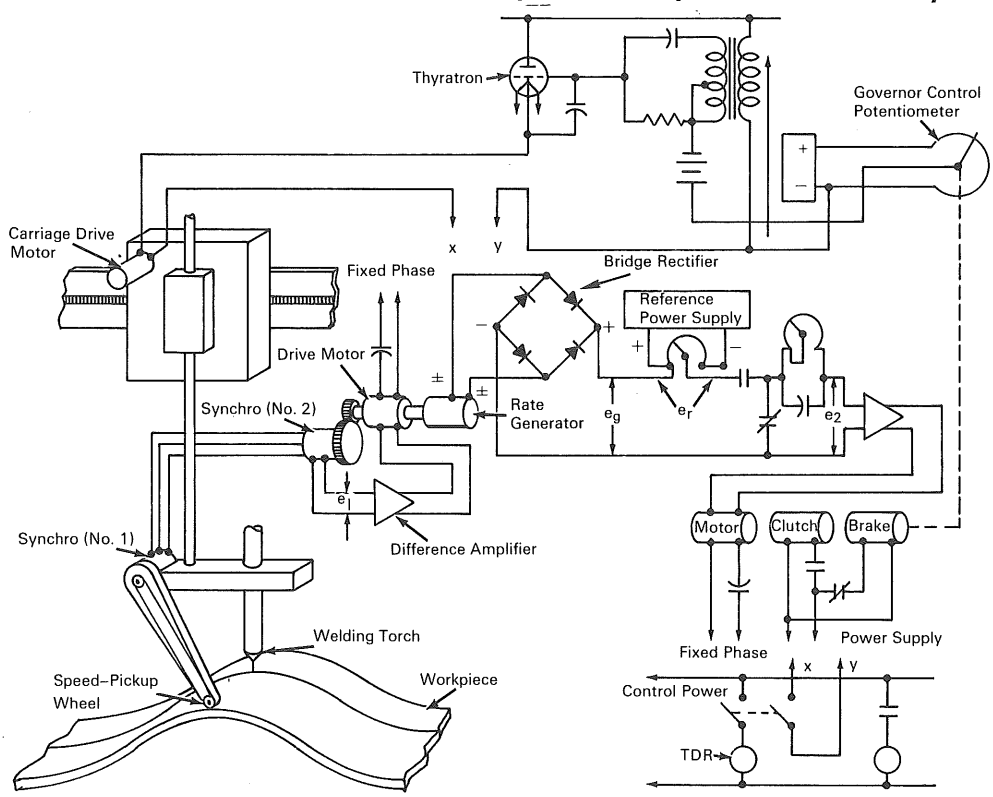

A speed control system has been designed to maintain the welding torch of an automatic welder at a substantially constant speed. The system is particularly useful when welding contoured or unusually shaped surfaces, which cause the distance from the work surface to the weld carriage to vary in a random manner.

The system uses a speed pickup wheel to sense the instantaneous speed of the welding torch carriage. The speed of the carriage is converted into a smooth voltage output by a tachometer or rate generator. The latter is isolated from the speed pickup wheel by a closed loop servo system which includes a pair of synchros, a difference amplifier, and a drive motor. The output from the rate generator is compared with a preset reference voltage which represents the desired welding speed. The resulting difference voltage controls the input to a thyratron governor which, in turn, varies the speed of the weld carriage drive motor.

Operation of the system is explained with reference to the circuit schematic as follows: The speed sensed by the pickup wheel is fed mechanically to a set of

(continued overleaf)

This document was prepared under the sponsorship of the National Aeronautics and Space Administration. Neither the United States Government nor any person acting on behalf of the United States Government assumes any liability resulting from the use of the information contained in this document, or warrants that such use will be free from privately owned rights.

synchros (No. 1 and No. 2). Synchro No. 1 feeds an error signal e_1 through synchro No. 2 and a difference amplifier to a drive motor. This motor rotates synchro No. 2 in such a direction as to reduce the error signal. Thus, synchro No. 2 closely tracks the first synchro through an integral feedback servo amplifier. The drive motor drives the rate generator which produces output voltage e_g, representing the instantaneous speed of the weld torch tip. This voltage passes through a bridge rectifier and is bucked against a reference voltage e_r from the reference power supply. The resulting difference voltage e_2 is amplified and fed through a motor, a clutch, and a brake to the governor control potentiometer and a thyratron governor. The governor controls the speed of the carriage drive motor, so that the tip of the welding torch moves at a substantially constant speed with respect to the workpiece. When the system is started, the governor is controlled by a time delay relay (TDR) which allows 1.5 seconds for the weld carriage speed to stabilize before the automatic speed control takes over. During this period, the brake is engaged while the clutch is disengaged.

Notes:

1. The innovation is in the motor-driven rate generator which is controlled by a separate feedback amplifier loop and the motor–clutch–brake arrangement for controlling the electronic motor governor.
2. Inquiries concerning this system may be directed to:

   Technology Utilization Officer
   Marshall Space Flight Center
   Huntsville, Alabama 35812
   Reference: B68-10091

Patent status:

Inquiries about obtaining rights for the commercial use of this invention may be made to NASA, Code GP, Washington, D.C. 20546.

Source: William A. Wall, Jr.
(MFS-14574)

NASA TECH BRIEF

NASA Tech Briefs are issued to summarize specific innovations derived from the U.S. space program, to encourage their commercial application. Copies are available to the public at 15 cents each from the Clearinghouse for Federal Scientific and Technical Information, Springfield, Virginia 22151.

Accumulator for Shaft Encoder

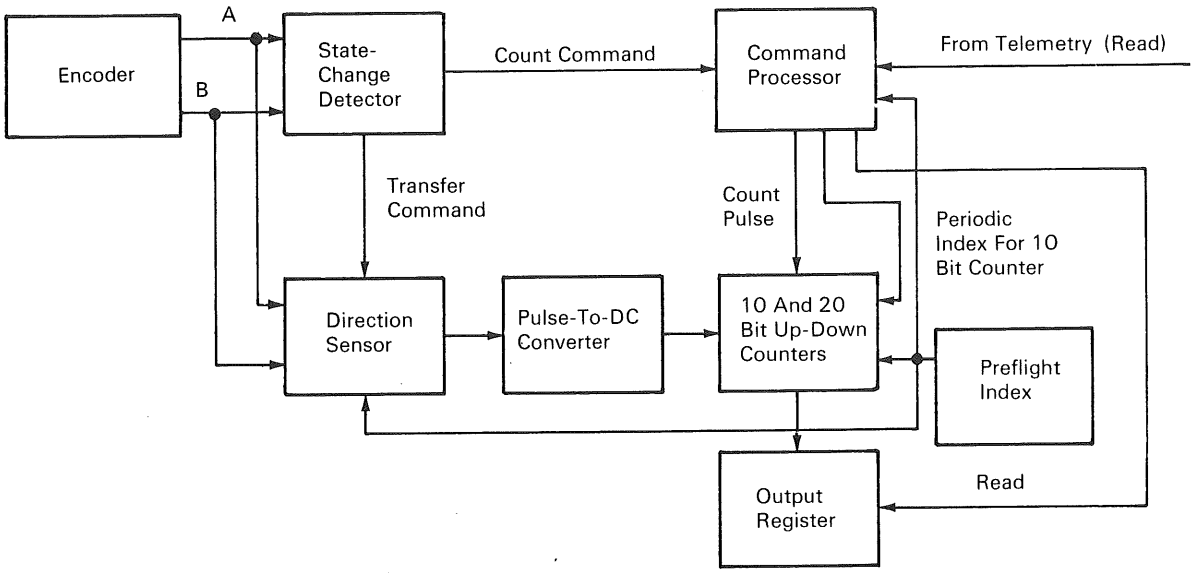

The block diagram represents a digital accumulator which relies almost entirely on integrated circuitry to process the data derived from the outputs of a gyro shaft encoder. The accumulator distinguishes between clockwise and counterclockwise rotation and then collects and stores the data.

The shaft encoder output signals (A and B) are initially transformed into a usable form by means of the state change detector and direction sensor. The command processor (designed to reject "noise" rates up to 270 kHz) ensures that the count and telemetry read commands are always carried out separately even if the initial commands overlap or are given at the same instant. The pulse-to-dc converter takes the output of the direction sensor and converts it to a dc level which is applied to the "up" and "down" controls. Before the 10 and 20 bit up–down counters can process a count pulse, both must be indexed by the preflight index command. However, no additional indexing is required for the 20 bit counter. After the read command is given, the output register collects and stores the data that are on the set output terminals of the up–down counters.

Note:

Complete details may be obtained from:

Technology Utilization Officer
Marshall Space Flight Center
Huntsville, Alabama 35812
Reference: B68-10093

Patent status:

No patent action is contemplated by NASA.

Source: C. C. Carroll, R. J. Robison, and J. A. Childs
of Auburn University
under contract to
Marshall Space Flight Center
(MFS-13599)

Category 01

This document was prepared under the sponsorship of the National Aeronautics and Space Administration. Neither the United States Government nor any person acting on behalf of the United States Government assumes any liability resulting from the use of the information contained in this document, or warrants that such use will be free from privately owned rights.

NASA TECH BRIEF

NASA Tech Briefs are issued to summarize specific innovations derived from the U.S. space program, to encourage their commercial application. Copies are available to the public at 15 cents each from the Clearinghouse for Federal Scientific and Technical Information, Springfield, Virginia 22151.

Portable Pulse Code Modulation (PCM) Subsystem

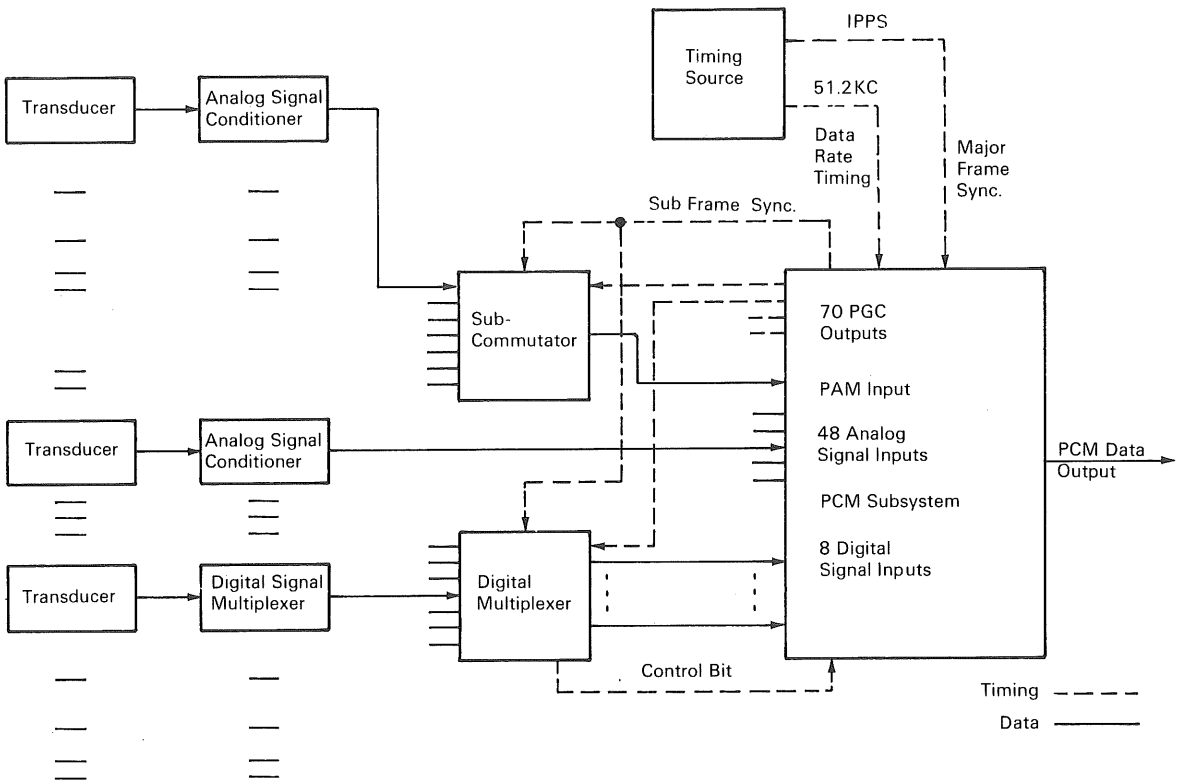

Three problems existed in earlier PCM subsystems, minimal data handling capability, fixed format, and system size, which could not always be tolerated. A PCM subsystem which is programmable, high speed, and small is required to support the variety of signals inherent to a sophisticated spacecraft, for example.

This PCM subsystem, hereinafter known as the subsystem, is capable of meeting the above requirements. The subsystem is used in the manner shown in the figure. A signal, event (on–off) or analog, generated by a transducer is first conditioned to the proper signal range acceptable to the subsystem. The signal is then sampled by an external multiplexer or by the subsystem directly. The sampled signal is then converted by the subsystem and transmitted in a PCM format to a receiving station for data handling and display.

All timing used for sampling signals is generated (and thus synchronized) by the subsystem. This timing is derived from an external timing source supplying both 51,200 Hz data rate timing, and 1 pulse per

(continued overleaf)

This document was prepared under the sponsorship of the National Aeronautics and Space Administration. Neither the United States Government nor any person acting on behalf of the United States Government assumes any liability resulting from the use of the information contained in this document, or warrants that such use will be free from privately owned rights.

second Major Frame Synchronization (MFS) signs. The MFS controls overall systems' synchronization. A conditioned MFS is generated by the subsystem for synchronization of all multiplexers.

The subsystem contains a timer or programmer with patchboard, high rate analog gates, an analog-to-digital converter, digital gates, and a parallel-to-serial converter.

Three types of data can be handled by the subsystem; Pulse Amplitude Modulation, direct analog, and digital. Each is converted in programmed sequence which is controlled by the timer and prepatching. The timer outputs, Primary Gate Controls (PGC), are patched to output drivers for control of external multiplexer sampling, and also to the internal high rate sampling analog gates.

The sampled analog data is converted into 8-bit digital code by the analog-to-digital converter and transferred to the parallel-to-serial converter where it is "interleaved" with the sampled digital data. The control of data conversion, analog or digital, into the PCM format is directed by the control bit, an externally supplied synchronization signal. Sampling rate and position of data in the PCM format is completely flexible with use of the PGC patchboard and control bit.

The subsystem is a vast improvement over past fixed format systems, mainly due to its format patching capability. Also, its capability of handling the three popular forms of sampled data simultaneously would normally require at least two earlier systems. Finally, its size, less than 0.75 cubic foot, and high speed, 51,200 bits per second, makes the subsystem very useful for a variety of telemetry systems' requirements.

Notes:

1. This subsystem has been reduced to practice and is being used in the sophisticated and complex Apollo spacecraft.
2. The subsystem is capable of handling 128 channels of analog and digital information and would be useful for the accumulation of data from many points for computer processing or real time display.
3. Inquiries concerning this innovation may be directed to:

   Technology Utilization Officer
   Manned Spacecraft Center
   Houston, Texas 77058
   Reference: B68-10106

Patent status:

No patent action is contemplated by NASA.

Source: P. A. Bradanini and J. T. Kluth
of North American Aviation, Inc.
under contract to
Manned Spacecraft Center
(MSC-11369)

NASA TECH BRIEF

NASA Tech Briefs are issued to summarize specific innovations derived from the U.S. space program, to encourage their commercial application. Copies are available to the public at 15 cents each from the Clearinghouse for Federal Scientific and Technical Information, Springfield, Virginia 22151.

Development of Biaxial Test Fixture Includes Cryogenic Application

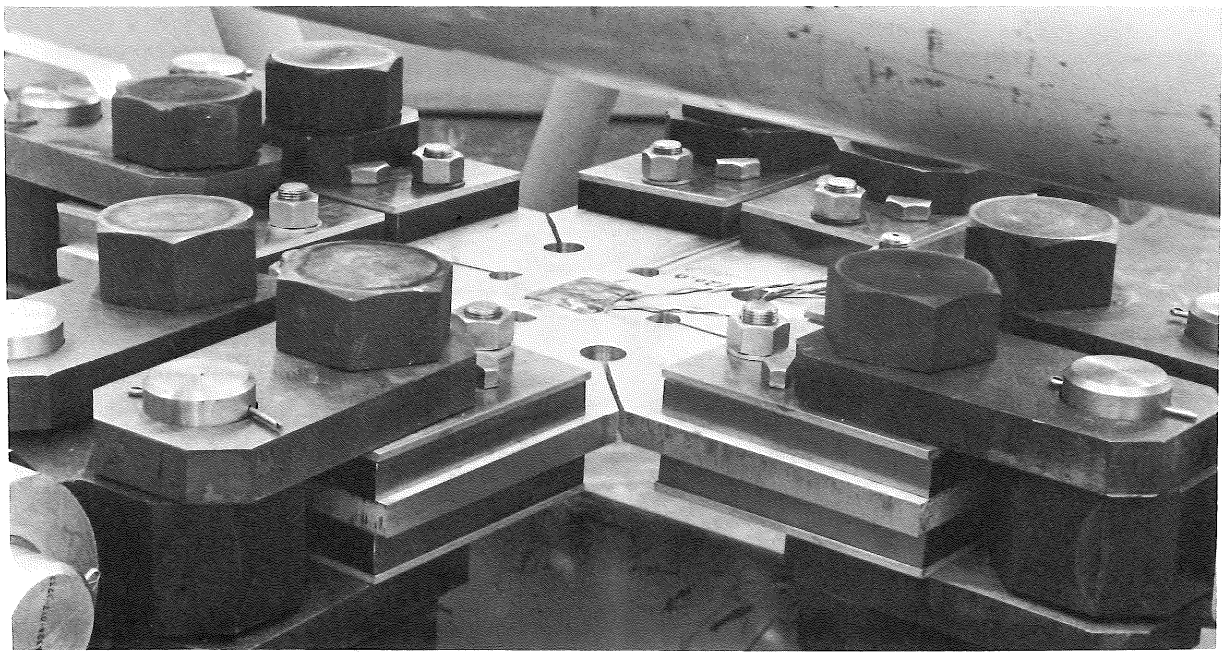

A test fixture has been developed with the capability of producing biaxial stress fields in test specimens to the point of failure. This fixture offers the advantage of determining a biaxial stress by dividing the applied load by the net cross section. With relatively minor modification, the test fixture can be used to evaluate materials, design concepts, and production hardware in a biaxial stress field at cryogenic temperatures.

With recent development of large pressurized tanks, a need has existed for an inexpensive method of testing critical tank areas to failure. In all pressurized tanks there are small areas of discontinuity that require structural certification. Since no facility existed with the capability of testing these small areas, a complete tank had to be built. Testing a complete tank is unsatisfactory because the exact location of rupture is often difficult to pinpoint and the design reserve of undamaged critical areas cannot be established. Numerous attempts to produce the stress fields experienced in a pressurized tank have met with limited success but were confined to very small test specimens.

A new biaxial test facility is capable of producing pressure vessel stress fields in panels 2 ft by 2 ft. The test panel is machined on both sides to form a frame

(continued overleaf)

This document was prepared under the sponsorship of the National Aeronautics and Space Administration. Neither the United States Government nor any person acting on behalf of the United States Government assumes any liability resulting from the use of the information contained in this document, or warrants that such use will be free from privately owned rights.

around the test area. Clamp-type grips are used to transfer load into the corners of the test panel through bolts loaded at the centroid of area. Load is applied by 50-kip hydraulic actuators attached to the grips and to load plates on the ends of the fixture. Load transmitted to the test panel is controlled by calibrated load rods between the hydraulic actuators and the fixture frame. Since the load can be controlled to apply a uniform stress to the test panel, failure load can be determined simply by dividing the total applied load at failure by the net cross section of the panel.

For cryogenic application, a metal tub is fabricated beneath the test panel and filled with a liquid cryogen. Cryogenic liquid is also sprayed on the test panel and loading grips from perforated tubing. A plastic thermal barrier is secured above the metal tub to control splash and air currents.

Note:

Inquiries concerning this innovation may be directed to:

Technology Utilization Officer
Marshall Space Flight Center
Huntsville, Alabama 35812
Reference: B68-10070

Patent status:

No patent action is contemplated by NASA.

Source: J. C. Helf, R. E. Kelly, D. A. Kerr, and C. R. Waldron of North American Aviation, Inc. under contract to Marshall Space Flight Center

(MFS-14185, 14189)

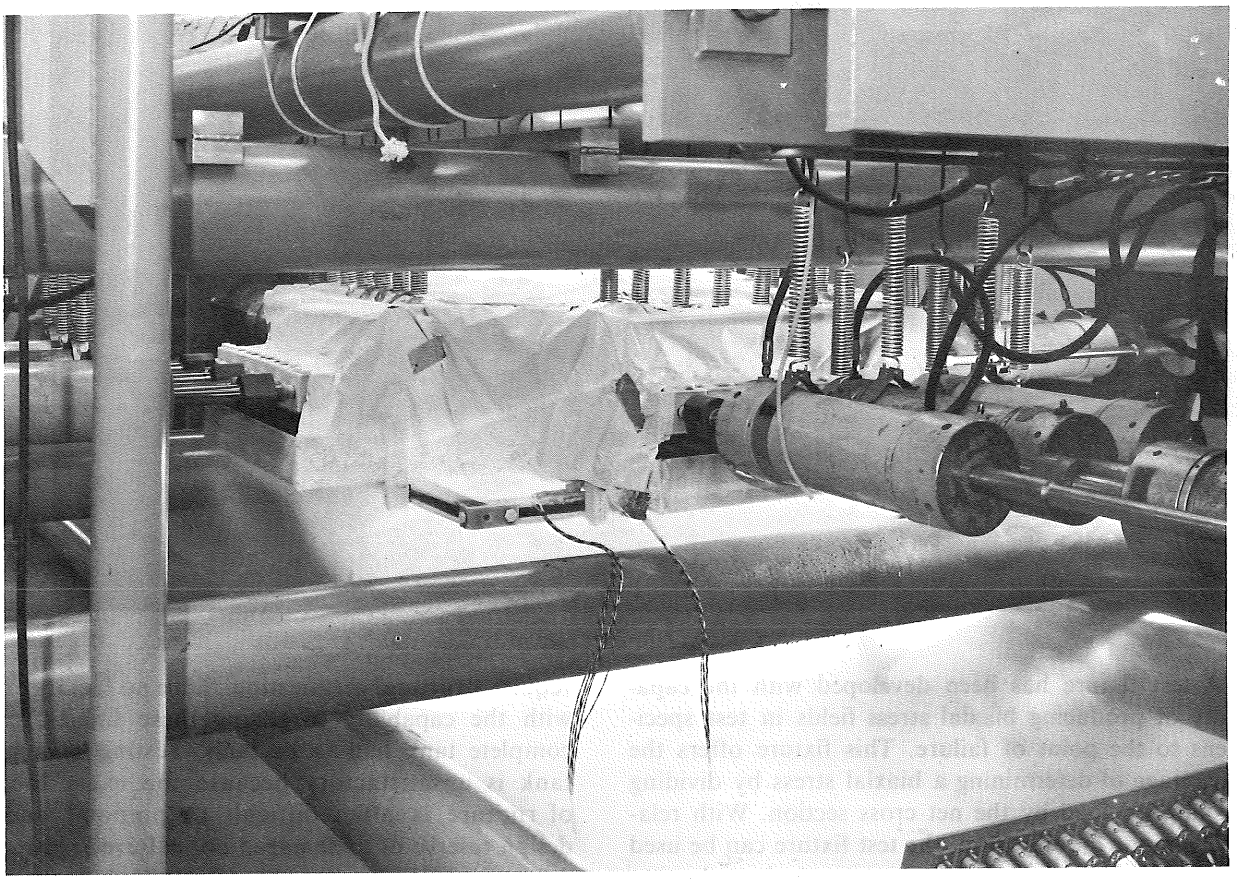

AEC-NASA TECH BRIEF

AEC-NASA Tech Briefs describe innovations resulting from the research and development program of the U.S. AEC or from AEC-NASA interagency efforts. They are issued to encourage commercial application. Tech Briefs are published by NASA and may be purchased, at 15 cents each, from the Clearinghouse for Federal Scientific and Technical Information, Springfield, Virginia 22151.

Twin Solution Calorimeter Determines Heats of Formation of Alloys at High Temperatures

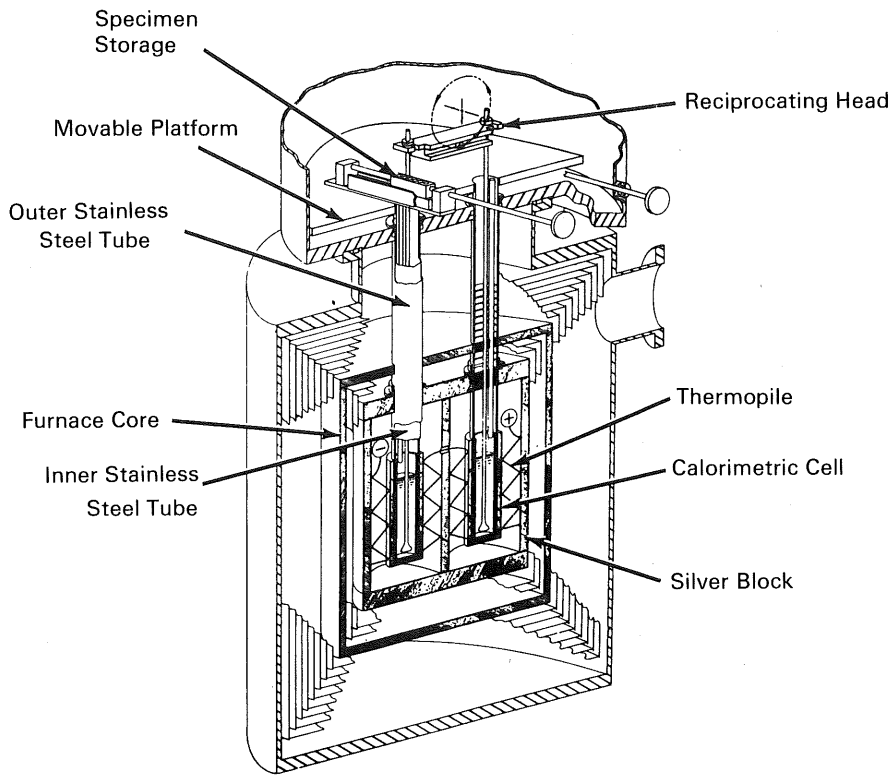

The problem:

To develop a calorimeter capable of determining the heats of formation of transition metal alloys at high temperatures. Calorimeters with single reaction cells have proved very successful in determining heats of formation of alloys when the reaction period is short and when moderate heat effects are observed. Errors increase substantially, however, when the metals or alloys dissolve slowly in a chosen solvent; the transition metals dissolve very slowly at temperatures suitable for precision calorimetry.

The solution:

A Calvet-type, high temperature, twin liquid metal solution calorimeter, particularly suited for determining the heats of formation of alloys containing transition elements. This twin differential calorimeter precisely measures the small heat effects generated over extended periods of time. It has a maximum

(continued overleaf)

This document was prepared under the sponsorship of the Atomic Energy Commission and/or the National Aeronautics and Space Administration. Neither the United States Government nor any person acting on behalf of the United States Government assumes any liability resulting from the use of the information contained in this document, or warrants that the use of any information, apparatus, method, or process disclosed in this document may not infringe privately owned rights.

operating temperature of 1073°K, and is equipped with an automatic data recording system. The performance of the calorimeter has been checked by measuring the heats of solution of pure noble metals in tin at 685°K. The results agree with existing published data.

How it's done:

The twin solution calorimeter consists basically of two calorimetric cells contained within two symmetrically located cavities in a single metal block thermostat, two thermopiles, a resistance furnace, a reciprocating head to which stirrers are attached, a specimen storage and dispensing device, a movable platform, and inner and outer stainless steel tubes.

The thermostat consists of a cylinder of pure silver 25.4 cm in diameter and 25.4 cm high. Silver is used because of its high thermal conductivity and resistance to atmospheric corrosion. Two cylindrical wells 10 cm in diameter are located symmetrically in the silver block and are covered by removable 2.5 cm thick silver lids. A calorimetric cell is located in each of the enclosed wells. The cell consists of a silver tube which is precisely fitted over the closed end of a stainless steel tube. The latter passes through the top lid of the block, to which it is securely fastened in good thermal contact, and extends to the top of the water-cooled vacuum chamber. This stainless steel tube provides: (1) a means of suspending the calorimetric cell within the cavity of the block, (2) a gas-tight environment for the interior of the calorimetric cell, and (3) an access to the interior of the cell without disassembling the apparatus.

Two thermopiles, which detect a temperature differential between the calorimetric cell and the cavity wall, are located in the annular space between the cells and the cavity walls. Each consists of 176 junctions, which are spot welded to gold terminals. Half the terminals are attached to the surface of the cells, the other half to the inner surface of the surrounding silver block. The attachment of these junctions provides adequate heat transfer even when the apparatus operates under vacuum. Mica washers or strips, approximately 0.05 mm thick, provide electrical insulation.

The two thermopiles are connected in a differential arrangement such that temperature drifts in the silver block produce emf's that exactly cancel. Thus the emf signal is essentially independent of temperature fluctuations in the block. The signal may be amplified and recorded as a function of time. This emf signal is proportional to the rate of heat transfer, and the total area under the emf–time curve is then a measure of the heat of reaction.

The temperature of the calorimeter is measured by a platinum/platinum–10% rhodium thermocouple. The temperatures within the calorimetric cells and the silver block are identical when thermal equilibrium is attained.

The procedure used in determining the heats of solution of several pure metals in liquid tin is as follows: The solvent, about four moles of tin, is contained in recrystallized alumina crucibles which fit snugly inside the removable stainless steel tubes. Solid specimens, of a mass to yield an intended heat effect of approximately 50 cal, are placed in the specimen storage device. The top chamber is evacuated to 1×10^{-6} mm Hg and the inner tubes are lowered into the calorimeter. After the tin melts, the stirrers are turned on and the chamber is filled with 99.999% pure argon gas at a slight positive pressure with respect to atmospheric pressure. Thermal equilibrium is attained in about 18 hours, after which the temperature drift does not exceed 0.1°K per day.

Each calorimetric experiment lasts approximately 150 minutes. In this period the heat pulse in the calorimeter is dissipated and the emf of the differential thermopile returns to the original value.

Notes:

1. Additional details describing furnace, shields, temperature controls, auxiliary features, instrumentation, and calibration are contained in *Review of Scientific Instruments*, vol. 37, no. 2, p. 164–167, February 1966.
2. This information should be of interest to the metals and chemical industry, testing laboratories, and manufacturers of calorimeters and related devices.
3. Inquiries concerning this innovation may be directed to:

   Office of Industrial Cooperation
   Argonne National Laboratory
   9700 South Cass Avenue
   Argonne, Illinois 60439
   Reference: B68-10083

Source: J. B. Darby, Jr.,
Metallurgy Division
and R. Kleb,
Solid State Sciences Division
Argonne National Laboratory
and O. J. Kleppa
University of Chicago
(ARG-10114)

Patent status:

Inquiries about obtaining rights for the commercial use of this innovation may be made to:

Mr. George H. Lee, Chief
Chicago Patent Group
U.S. Atomic Energy Commission
Chicago Operations Office
9800 South Cass Avenue
Argonne, Illinois 60439

AEC-NASA TECH BRIEF

AEC-NASA Tech Briefs describe innovations resulting from the research and development program of the U.S. AEC or from AEC-NASA interagency efforts. They are issued to encourage commercial application. Tech Briefs are published by NASA and may be purchased, at 15 cents each, from the Clearinghouse for Federal Scientific and Technical Information, Springfield, Virginia 22151.

Superconducting Switch Permits Measurement of Small Voltages at Cryogenic Temperatures

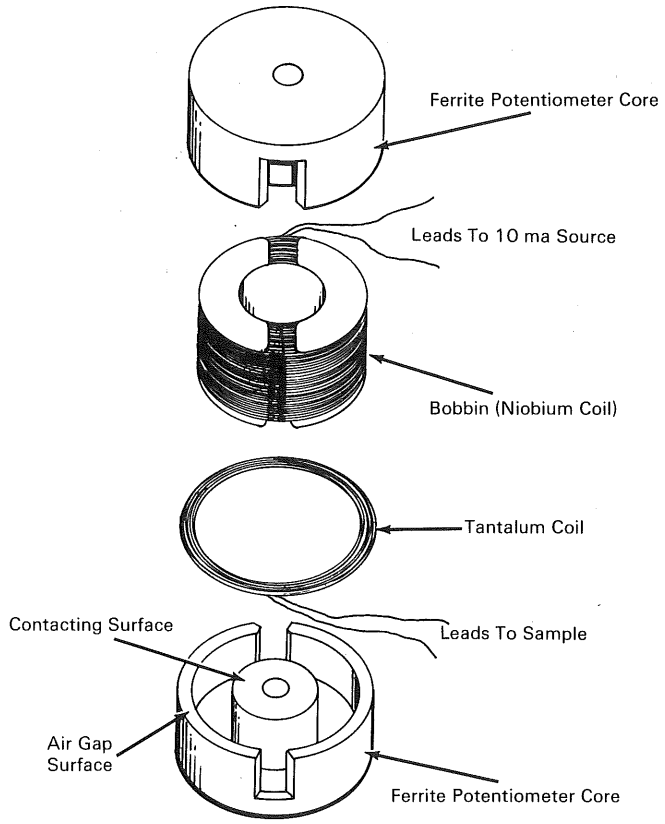

The problem:

To measure small, thermoelectrically generated voltages produced by thermocouples in a liquid helium bath. Such measurements are made difficult by relatively large, spurious, thermoelectric voltages generated in the leads which connect the thermocouple (at low temperatures) with the measuring device (at room temperatures).

The solution:

A small, dual-coil, superconducting, on–off switch placed in a shunt configuration between the thermocouple (voltage source) and the measuring device. When the switch is nonsuperconducting, the measuring device sees the sum of the voltage to be measured and the spurious thermoelectric voltages. When the switch is superconducting, only the spurious voltages

(continued overleaf)

This document was prepared under the sponsorship of the Atomic Energy Commission and/or the National Aeronautics and Space Administration. Neither the United States Government nor any person acting on behalf of the United States Government assumes any liability resulting from the use of the information contained in this document, or warrants that the use of any information, apparatus, method, or process disclosed in this document may not infringe privately owned rights.

are detected. The switch, in combination with an accurate potentiometer, will yield a sensitivity of 1×10^{-9} volt.

How it's done:

The switch consists of two, identical, ferrite potentiometer cores. A bobbin, placed between the potentiometer cores, carries 800 windings of 0.005-inch-diameter niobium wire. After the potentiometer cores are screwed together with the bobbin within, a coil of fine, tantalum wire is wound noninductively into the air gap between the surfaces of the potentiometer cores; 7.4 mm of 0.002-inch diameter tantalum wire is used and is separated from the niobium coil by copper foil. Both the tantalum and niobium wire are teflon-coated. The switch dimensions are 3.5 cm in diameter by 1.5 cm thick.

In operation, the switch is immersed in liquid helium outside the vacuum can of the cryostat. The tantalum coil of the switch is connected to the thermocouple within that vacuum can via short pieces of niobium wire spot-welded to the tantalum wire. With no current passing through the niobium coil, the tantalum coil is superconducting (with a resistance of 1×10^{-5} ohm), and the measuring device can detect only the spurious voltages. A current of 6 ma or more passed through the niobium coil activates the switch by causing the tantalum coil to pass into a nonsuperconducting state with a resistance of 45 ohms at 4.2°K. (The resistance of the tantalum coil at room temperature is 1040 ohms.) In this state, the measuring device detects the sum of the thermocouple voltage and the spurious voltage since the tantalum coil impedance is very large relative to the output impedance of the thermocouple.

Notes:

1. Additional details may be found in *Review of Scientific Instruments,* vol. 37, no. 12, p. 1675–1676 (December 1966).
2. Inquiries concerning this innovation may be directed to:

   Office of Industrial Cooperation
   Argonne National Laboratory
   9700 South Cass Avenue
   Argonne, Illinois 60439
   Reference: B68-10087

   Source: R. P. Huebener and R. E. Govednik
   Solid State Sciences Division
   (ARG-90260)

Patent status:

Inquiries about obtaining rights for commercial use of this innovation may be made to:

Mr. George H. Lee, Chief
Chicago Patent Group
U.S. Atomic Energy Commission
Chicago Operations Office
9800 South Cass Avenue
Argonne, Illinois 60439

AEC-NASA TECH BRIEF

AEC-NASA Tech Briefs describe innovations resulting from the research and development program of the U.S. AEC or from AEC-NASA interagency efforts. They are issued to encourage commercial application. Tech Briefs are published by NASA and may be purchased, at 15 cents each, from the Clearinghouse for Federal Scientific and Technical Information, Springfield, Virginia 22151.

New Camera Tube Improves Ultrasonic Inspection System

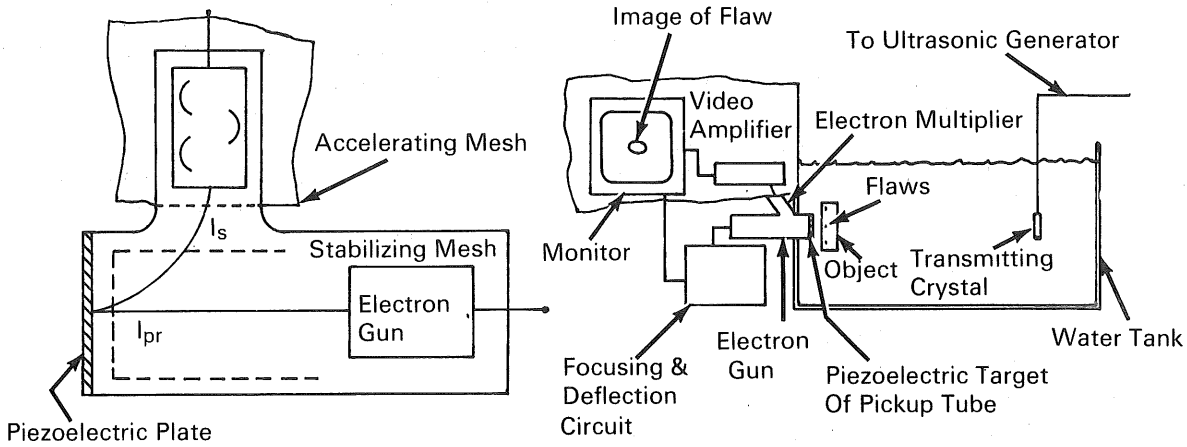

ULTRASONIC CAMERA TUBE

ULTRASONIC INSPECTION SYSTEM

The problem:

To improve resolution and reduce noise sensitivity of an ultrasonic television inspection system used in the nondestructive testing of metals. In existing systems, the camera tube sensitivities are limited by the low input load resistance of the associated amplifiers. Also, interference patterns from the transmitter itself are common noise sources at a level of 10^{-8} ampere of signal current. Both factors combine, making effective shielding of equipment from spurious noises very difficult.

The solution:

An electron multiplier, incorporated into the camera tube of an ultrasonic imaging system, improves resolution, effectively shields low level circuits, and provides a high level signal input to the television camera. The electron multiplier provides amplification of the secondary electron beam within the camera tube. The signal currents are amplified 10^{-5} to 10^{-6} times greater than the threshold value. The tube sensitivity is set by the piezoelectric plate's ability to modulate the secondary emission electrons without the need for a great deal of shielding, as is the case for tubes without the multiplier. The multiplier also serves as a wide-band amplifier having extremely good noise characteristics.

The improved system is effective for inspection of metallic materials for bonds, voids, and homogeneity, which are not detectable by conventional methods. The system is currently being evaluated for application in medical diagnostics.

How it's done:

The improved ultrasonic camera tube is shown on the left. The accelerating potential of the electron gun is 1000 volts. I_{pr} is the primary electron current; I_s is the secondary emission current. The accelerating mesh is +400 volts relative to the stabilizing mesh. The electron multiplier has 10 stages with 100 volts/stage.

(continued overleaf)

This document was prepared under the sponsorship of the Atomic Energy Commission and/or the National Aeronautics and Space Administration. Neither the United States Government nor any person acting on behalf of the United States Government assumes any liability resulting from the use of the information contained in this document, or warrants that the use of any information, apparatus, method, or process disclosed in this document may not infringe privately owned rights.

The secondary electrons, produced on the 2-inch diameter, barium titanate piezoelectric target by the high velocity electron scanning beam, are accelerated into the electron multiplier by the accelerating mesh, producing high level output. The secondary electron beam is modulated on a point-to-point basis by the voltage generated by the piezoelectric target. The target is irradiated by an impinging ultrasonic field.

The diagram of the entire ultrasonic imaging inspection system set up for a through-transmission inspection is shown on the right. (Reflection techniques may also be used.) The far field ultrasonic pattern provides a uniform ultrasonic intensity for a shadow-type image.

Following detection and amplification in the pickup tube, the amplified video signal is presented by a conventional television system. The image of any discontinuity is then reproduced on the observation monitor.

Numerous tests were run, comparing this system with other ultrasonic methods and X-radiographic techniques. It was shown capable of detecting flaws within metals to a degree equal to or better than all other methods tested.

Notes:

1. Additional details are contained in: *An Evaluation of an Ultrasonic Inspection System Employing Television Techniques,* by Dr. J. E. Jacobs, W. E. Collis, and Harold Berger, Argonne National Laboratory, Argonne, Illinois. This article is published in the May 1964 issue of *Materials Evaluation*. The report includes a review of articles concerning research in the ultrasonic imaging field. Nondestructive test procedures are discussed.
2. This information would be of interest to users and manufacturers of nondestructive test equipment.
3. Inquiries concerning this innovation may be directed to:

   Office of Industrial Cooperation
   Argonne National Laboratory
   9700 South Cass Avenue
   Argonne, Illinois 60439
   Reference: B68-10088

Source: J. E. Jacobs and W. J. Collis
Northwestern University
and H. Berger
Metallurgy Division
Argonne National Laboratory
(ARG-90237)

Patent status:

Inquiries about obtaining rights for commercial use of this innovation may be made to:

Mr. George H. Lee, Chief
Chicago Patent Group
U.S. Atomic Energy Commission
Chicago Operations Office
9800 South Cass Avenue
Argonne, Illinois 60439

NASA TECH BRIEF

NASA Tech Briefs are issued to summarize specific innovations derived from the U.S. space program, to encourage their commercial application. Copies are available to the public at 15 cents each from the Clearinghouse for Federal Scientific and Technical Information, Springfield, Virginia 22151.

Projection Transparencies from Printed Material

The problem:

The usual method for preparing project transparencies, or view graphs, is to deposit ink on a transparent sheet of plastic in the desired pattern. This is accomplished by (1) a variety of photographic processes, (2) by means of a Xerox #4 camera transferring the image to vellum from which it is retransferred on to film by the diazo chrome process, or (3) manually by an artist (this is rarely done because of the time and expense). Except for the latter, these methods all result in a black deposit on a clear or colored plastic background.

The solution:

A method that permits the use of almost any expendable printed material, whether it be pictures, charts, or text, or whether it be in unlimited color or black and white. The method can be accomplished by either of two techniques, with a slight difference in materials. Each technique has some advantage over the other, and one material may be more readily available than the other.

How it's done:

Method A: Remove the protective covering from one side of a sheet of double faced acetate adhesive and apply the exposed face to the desired subject material. With the printed matter on a smooth firm surface, and the protected side of the acetate uppermost, smooth out all the air pockets between the two. This can be done with an artist's hand burnishing tool, or any rounded, smooth surfaced object. The entire area should be rubbed thoroughly in this manner to assure the best possible bond between the adhesive and the ink of the printed matter. Remove the protective covering from the second side of the acetate adhesive. The printed side is thoroughly soaked with water, either in a pan or a running stream. When all dry or opaque spots are gone, the paper can be peeled from the plastic film, leaving the ink from the paper adhering to the film. It may be necessary to carefully wash the film surface to thoroughly remove fibers, glue, clay, etc., which remain from the original printing process. When thoroughly clean, the majority of the adhering water can be removed from both film surfaces by wiping gently with a nonlinty cloth, or a soft, photographic type plastic sponge. The transparency can now be mounted by the adhesive face to an appropriate holder. Both faces of the transparency are next evenly coated with a lacquer fixative from a spray can. This seals the adhesive, making it smooth to the touch, and smooths the surface with the printing attached, to improve its transparent characteristic.

Method B: The subject printed material is transferred to the plastic sheet by either of two means: (1) The preferred equipment if available is a dry mounting machine, a press-type machine with firm but compressible bottom platen and a hot metal top plate, with controlled heat. A sandwich is prepared in the following manner: the printed page, with the desired material up, is covered with a sheet of "Thermo-Fax" laminating film, cloudy side down, and this in turn is covered with a sheet of the interleafing paper from the film pack. This sandwich is placed between the plates of the hot press in the order described above. Then the plates are clamped shut and held at 270°F. for 3 to 5 minutes, longer if need be, to remove all air bubbles between the plastic and the printed page. (2) Instead of the dry mount press, a "Thermo-Fax" copying machine may be used. In this case, a sheet of card stock, furnished in the film pack, is added to the bottom of the sandwich described above. This grouping is run through the copying machine as a unit. It may be necessary

(continued overleaf)

This document was prepared under the sponsorship of the National Aeronautics and Space Administration. Neither the United States Government nor any person acting on behalf of the United States Government assumes any liability resulting from the use of the information contained in this document, or warrants that such use will be free from privately owned rights.

to run the sandwich through the machine several times to completely remove all air bubbles.

The laminated material cools so rapidly that it is not a consideration, and the interleafing paper may be stripped off immediately. The printed side of the laminate is thoroughly soaked with water, either in a pan or a running stream. When all dry or opaque spots are gone, the paper can be peeled from the plastic film, leaving the ink from the paper adhering to the film. It may be necessary to carefully wash the film surface to thoroughly remove fibers, glue, clay, etc., which remain from the original printing process. When thoroughly clean, the majority of the adhering water can be removed from both film surfaces by wiping gently with a nonlinty cloth, or a soft, photographic type plastic sponge. The transparency can now be mounted with some pressure sensitive tape to the back side of an appropriate holder. The printed face of the transparency is next evenly coated with a lacquer fixative from a spray can. This smooths the surface and improves its transparent characteristics.

Notes:

1. This technique involves only inexpensive materials and standard equipment, no expensive art department or highly skilled personnel are required, and time required for end product preparation is very short.
2. Inquiries concerning this innovation may be directed to:

   Technology Utilization Officer
   Marshall Space Flight Center
   Huntsville, Alabama 35812
   Reference: B68-10112

Patent status:

No patent action is contemplated by NASA.

Source: Lenore S. Grunewald
and Thomas B. Nickerson
of The Boeing Company
under contract to
Marshall Space Flight Center
(MFS-14608)

NASA TECH BRIEF

NASA Tech Briefs are issued to summarize specific innovations derived from the U.S. space program, to encourage their commercial application. Copies are available to the public at 15 cents each from the Clearinghouse for Federal Scientific and Technical Information, Springfield, Virginia 22151.

Piggy-Back Mounting Would Increase Microcircuit Packaging Density

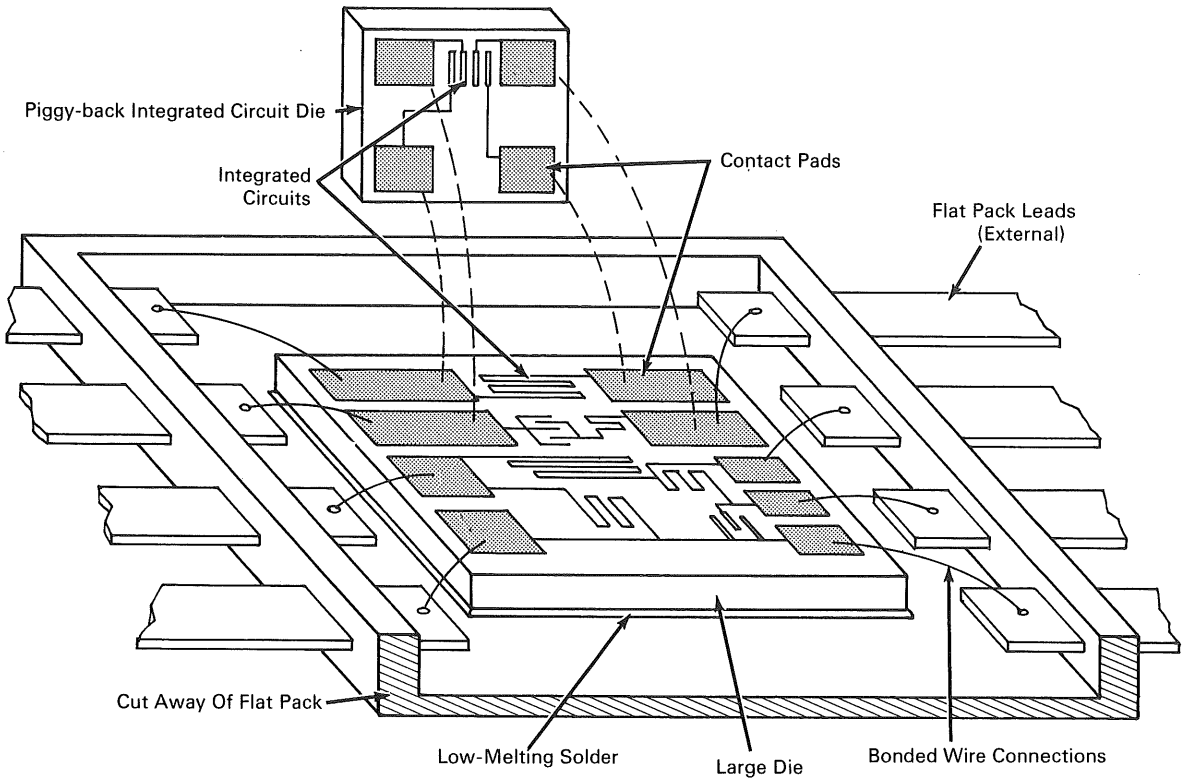

The packaging density of integrated circuits would be increased by face-mounting an integrated circuit die on a larger integrated circuit die, rather than separately on an insulating substrate as in conventional practice. This piggy-back method of packaging would also increase design flexibility, as chips of different types can be combined to form an integrated circuit which is impractical to fabricate in a single die by standard methods. The piggy-back packaging additionally would eliminate interconnection leads between the die and associated inductances, and thus increase the attainable frequency response of the circuit.

The illustration shows the piggy-back die, rotated out of position, with a contact arrangment corresponding to the contact pattern on the larger die. The integrated circuits (protected by glass coatings) on each die will be separated only by the contact pad thickness when the piggy-back die is attached to the larger die. Any one of several methods, involving

(continued overleaf)

This document was prepared under the sponsorship of the National Aeronautics and Space Administration. Neither the United States Government nor any person acting on behalf of the United States Government assumes any liability resulting from the use of the information contained in this document, or warrants that such use will be free from privately owned rights.

heat, pressure, mechanical scrubbing, or a low-melting solder, can be used to attach the smaller die. The larger die is shown mounted in a flat pack to which it is attached by means of a low-melting solder.

Note:

This development is in the conceptual stage only, and as of the date of publication of this Tech Brief, neither a model nor prototype has been constructed.

Patent status:

Inquiries about obtaining rights for the commercial use of this invention may be made to NASA, Code GP, Washington, D.C. 20546.

Source: S. Gaudiano
(MSC-12059)

NASA TECH BRIEF

NASA Tech Briefs are issued to summarize specific innovations derived from the U.S. space program, to encourage their commercial application. Copies are available to the public at 15 cents each from the Clearinghouse for Federal Scientific and Technical Information, Springfield, Virginia 22151.

High Efficiency, High Frequency Magnetic Deflection Driver

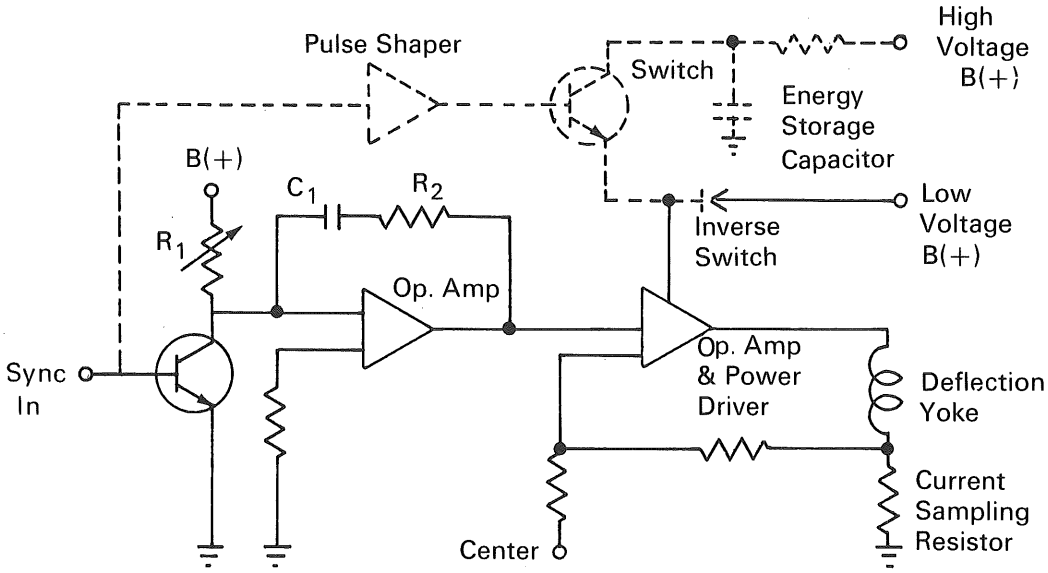

Many light sensitive vacuum tubes, both display and sensor, use electromagnetic fields to deflect the electron beam into the required raster. Electromagnetic deflection can be done with volts or tens of volts rather than the hundreds of volts required for electrostatic deflection (20,000 volt devices are common), and is thus becoming more popular with the appearance of transistors and integrated circuits in the television field.

The electromagnetic yoke is, however, an energy storage device which stores energy during the scan and releases it in the flyback or retrace. This flyback time is typically 5% to 20% of the total sweep time and thus the flyback voltage is 5 to 20 times the voltage required for the scan. This technique involves a method of switching to a voltage high enough to dissipate the flyback pulse during the retrace time and then operating during the scan time at a much lower voltage. With the improvement, the high voltage has a low duty cycle and since this occurs when the yoke is supplying energy to the circuit, the high voltage power dissipation is small and can usually be supplied by the imaging tube accelerator voltages.

An ideal circuit design would require only IR/2 volts from one supply and L di/dt (flyback) + L di/dt (scan) + IR/2 volts from the other supply. Thus, if the L di/dt (flyback) voltage is supplied only during the flyback period and the L di/dt (scan) + IR/2 is supplied the rest of the time, the power dissipation is reduced by a factor of 20 or better ((L di/dt (flyback))/(L di/dt (scan)) ratio) during the scan time.

The figure shows a block diagram of a typical driven sweep with the unique features of this technique added in dashed lines. Using the operational amplifier

(continued overleaf)

This document was prepared under the sponsorship of the National Aeronautics and Space Administration. Neither the United States Government nor any person acting on behalf of the United States Government assumes any liability resulting from the use of the information contained in this document, or warrants that such use will be free from privately owned rights.

as an integrator, the sawtooth is determined by B(+), R_1, and C_1 while the step is determined by the drop across R_2. The output stages combine a complementary pair for efficiency with negative feedback into another operational amplifier to provide linearity, stability, and a convenient centering control. The practical circuit demonstrates an obvious improvement in power dissipation over the commercial units. The low voltage power supplies are not optimized to the chosen yoke, so a further improvement of at least 2:1 in power dissipation could be realized.

Notes:

1. This disclosure claims the general idea of switching to a higher supply voltage during the "retrace" time as a means of (a) reducing power consumption, (b) eliminating the need of a special high voltage, high current power supply, and (c) reduction of cost due to the use of lower power devices.
2. Inquiries concerning this innovation may be directed to:

   Technology Utilization Officer
   Manned Spacecraft Center
   Houston, Texas 77058
   Reference: B68-10116

Patent status:

No Patent action is contemplated by NASA.

Source: F. L. Schaff
of Westinghouse Electric Corporation
under contract to
Manned Spacecraft Center
(MSC-11597)

NASA TECH BRIEF

NASA Tech Briefs are issued to summarize specific innovations derived from the U.S. space program, to encourage their commercial application. Copies are available to the public at 15 cents each from the Clearinghouse for Federal Scientific and Technical Information, Springfield, Virginia 22151.

Bilateral, Zero-Impedance Static Semiconductor Switch

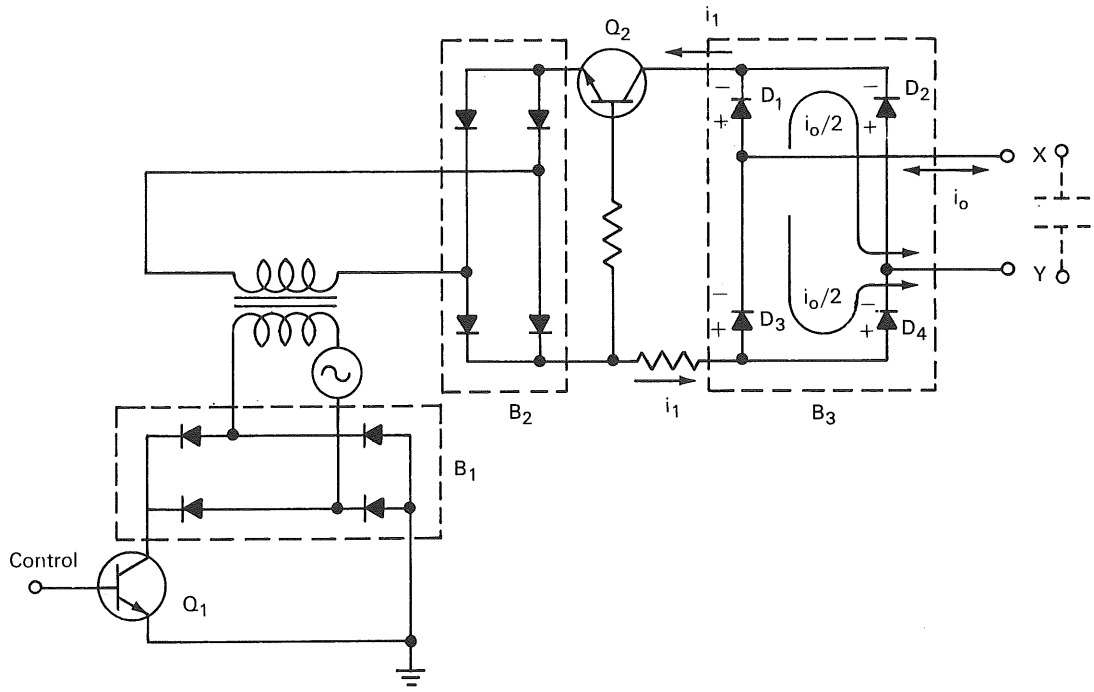

The problem:

There are many applications of electronic control circuits where it is necessary to interrupt the circuits by means of an external command signal. Bidirectional electromechanical relays, used for such applications because they have low contact resistance and provide isolation from the signal source, have a number of disadvantages such as slow switching speed, contact bounce, contact pitting, and arcing. Conventional semiconductor switching circuits which have been used to function as a bidirectional relay are unsuitable for low-current applications because of their nonlinear characteristics at low currents (in the range of 100 microamperes).

The solution:

A static semiconductor switching circuit that eliminates the undesirable features of electromechanical relays and conventional semiconductor switching circuits.

How it's done:

The "relay contacts" for this circuit are represented by terminals X and Y (illustrated by dotted contacts) and consist of semiconductor components. The switch is closed by a positive control signal voltage which forward biases transistor Q_1 and switches it to the conducting state. With Q_1 on, the ac voltage is applied to the transformer primary through the diode bridge circuit B_1 and transistor

(continued overleaf)

This document was prepared under the sponsorship of the National Aeronautics and Space Administration. Neither the United States Government nor any person acting on behalf of the United States Government assumes any liability resulting from the use of the information contained in this document, or warrants that such use will be free from privately owned rights.

Q_1. The secondary voltage of the transformer is full-wave rectified by diode bridge circuit B_2. The output from this bridge circuit turns on transistor Q_2 and provides bias current i_1 to forward bias the diodes of bridge circuit B_3 in the linear and low resistance region of their characteristic curves. Bias current i_1 permits signal current i_0 to flow backward through the diodes in B_3 (when $i_0 < i_1$) and causes the voltage drop across each of these diodes to be nearly constant and equal for small changes in the diode current. As a result, i_0 flows through two parallel paths in bridge B_3. When Q_1 and Q_2 are conducting and terminal X is more positive than Y, i_0 flows into terminal X. At the junction of D_1 and D_3, half of the current ($i_0/2$) flows in the forward direction through D_1 and in the backward direction through D_2 to terminal Y. The parallel path for the other half of current i_0 is through D_3 in the backward direction and through D_4 in the forward direction to terminal Y. The net voltage drop around each path is zero because the voltage drop through the forward diode is compensated by an equal and opposite voltage rise through the backward diode. This produces a net zero voltage drop at terminals X and Y and thus a zero impedance for bilateral currents at these terminals. For reverse current flow where terminal Y is more positive than X, the current divides through the same two parallel paths. In this case, however, the current flows through the backward directions of D_4 and D_1 and through the forward directions of D_3 and D_2 from Y to X.

The switch is turned off by removing the control signal voltage from Q_1. The bias current i_1 becomes zero, and diodes D_2 and D_3 are back biased by the voltage of the external circuit at terminals X and Y when X is more positive than Y. D_4 and D_1 are back biased when Y is more positive than X. The back biased diodes are in a blocked state which transfers the voltage behind terminals X and Y to the open-circuited transistor Q_2 and forces the current i_0 at X and Y to be zero, that is, the switch to be opened.

Patent status:

Title to this invention has been waived under the provisions of the National Aeronautics and Space Act [42 U.S.C. 2457 (f)], to the Westinghouse Electric Corporation.

Source: C. L. Doughman
of Westinghouse Electric Corporation
under contract to
Lewis Research Center
(LEW-10129)

NASA TECH BRIEF

NASA Tech Briefs are issued to summarize specific innovations derived from the U.S. space program, to encourage their commercial application. Copies are available to the public at 15 cents each from the Clearinghouse for Federal Scientific and Technical Information, Springfield, Virginia 22151.

Circuit Enhances Vertical Resolution in Raster Scanning Systems

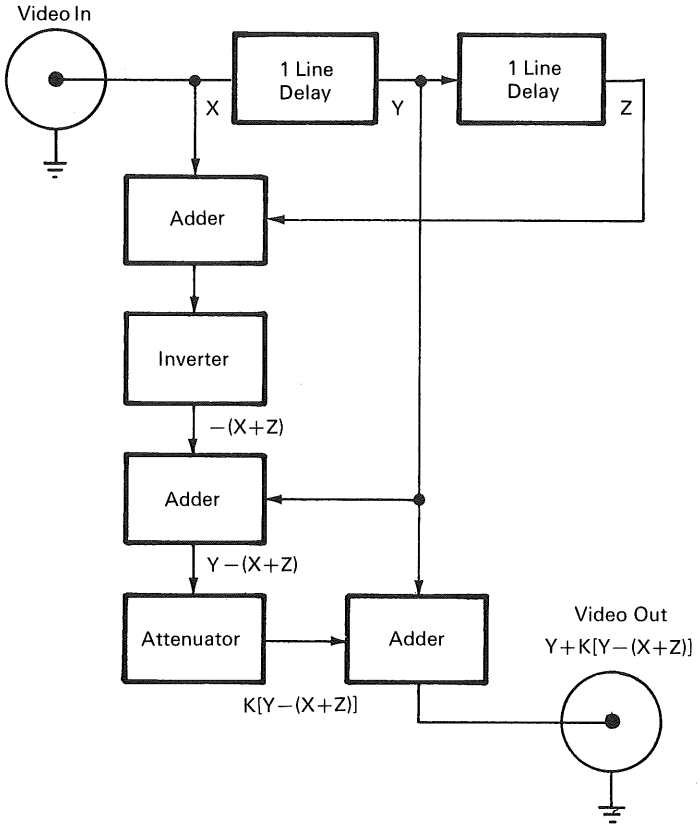

The circuit represented by the block diagram is designed to enhance vertical resolution in electron beam, raster scanning systems exhibiting aperture distortion in the vertical direction. A sensitized area (image) whose boundary lies more than one sweep-width away from the scan beam position produces a video output when the scan beam nears it. This effect produces vertical elongation in the reconstructed images of all sensitized areas on the surface as well as smearing between vertically adjacent, closely spaced images.

The method used to compensate for the distortion and its attendant loss of resolution is based on a real-time comparison between the vertical characteristics of an image and its immediate future and past history. In the television raster system, video signals are delayed by exactly the horizontal scan period. Two such delay increments are used so that three com-

(continued overleaf)

This document was prepared under the sponsorship of the National Aeronautics and Space Administration. Neither the United States Government nor any person acting on behalf of the United States Government assumes any liability resulting from the use of the information contained in this document, or warrants that such use will be free from privately owned rights.

plete (two delayed and one real-time) video lines are available simultaneously and are in horizontal synchronization. As indicated on the block diagram, the incoming video signals are delayed one horizontal period each by the delay lines. The resulting signals are X (undelayed), Y (delayed one period), and Z (delayed two periods). These signals are processed by sequential addition, inversion, and attenuation (attenuator constant typically less than 0.5) so that the video output becomes: $Y + K\ [Y - (X + Z)]$. Resolution enhancement is attained through contrast enhancement between closely vertically spaced images. This enhancement is achieved at the expense of some loss in contrast of vertically continuous images.

Notes:

1. In its present stage of development, the circuit is not suitable for vector/alphanumeric displays, because these require higher horizontal resolution than is now practicable with the circuit.
2. The basic concept of this circuit may be applied as a means of enhancing the signal-to-noise ratio as well as vertical resolution in raster scanning systems.
3. Technical details may be obtained from:
   Technology Utilization Officer
   Manned Spacecraft Center
   Houston, Texas 77058
   Reference: B68-10121

Patent status:

No patent action is contemplated by NASA.

Source: J. R. Greenwood, W. H. Alsovsky, and O. M. Holley of Philco-Ford Corporation under contract to Manned Spacecraft Center (MSC-12123)

NASA TECH BRIEF

NASA Tech Briefs are issued to summarize specific innovations derived from the U.S. space program, to encourage their commercial application. Copies are available to the public at 15 cents each from the Clearinghouse for Federal Scientific and Technical Information, Springfield, Virginia 22151.

Reliable, Self-Calibrating Vibration Transducer

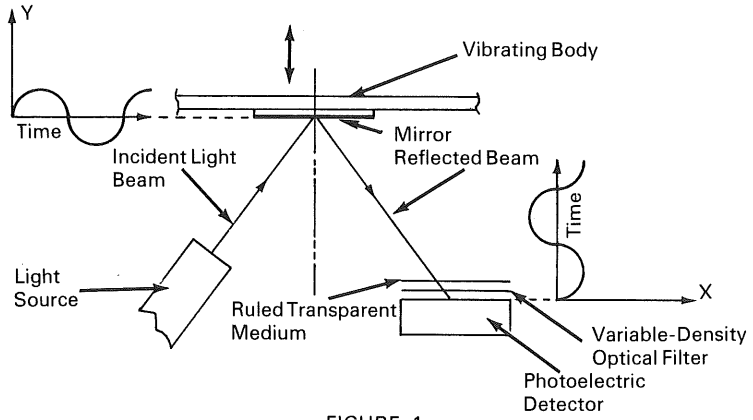

FIGURE 1

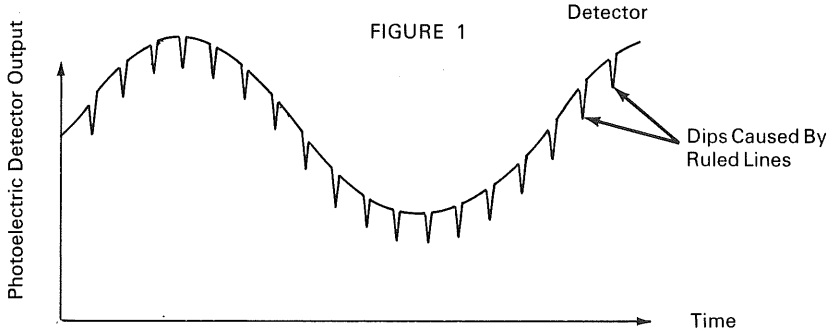

FIGURE 2

A highly reliable transducer system has been designed to measure the uniaxial vibration amplitudes (deflections) and frequency of a body subjected to mechanical vibration. The basic system is self-calibrating and provides an output which unambiguously indicates the direction as well as the magnitude of the uniaxial deflections. The transducer system comprises a light source, a small plane mirror mounted on the test body, and a sandwich arrangement consisting of (1) a transparent layer on which are uniformly spaced ruled lines having a predetermined opacity and width, (2) an optical filter whose optical density varies linearly with displacement of the reflected light beam, and (3) a photoelectric detector which produces a voltage or current proportional to the intensity of the reflected light beam penetrating the other two layers of the sandwich.

If the amplitude, Y, of the vibrating body varies sinusoidally with time (Figure 1), the light beam reflected from the mirror will sweep across the sandwich arrangement at a sinusoidal rate in the X direction. As a consequence, the intensity of the light passing through the variable-density optical filter and the corresponding output of the photoelectric

(continued overleaf)

This document was prepared under the sponsorship of the National Aeronautics and Space Administration. Neither the United States Government nor any person acting on behalf of the United States Government assumes any liability resulting from the use of the information contained in this document, or warrants that such use will be free from privately owned rights.

detector will also vary sinusoidally. When the reflected light beam crosses one of the ruled lines on the transparent medium, the intensity of the beam decreases and causes a corresponding decrease or dip in the output of the photoelectric detector, as shown in Figure 2.

The vibration amplitude is calculated from the number of dips between a maximum and a minimum point on the sinusoid and the geometric parameters of the transducer setup. The vibration frequency corresponds to the cycles per second of the sinusoid.

Note:

Inquiries concerning this transducer system may be directed to:

Technology Utilization Officer
Langley Research Center
Langley Station
Hampton, Virginia 23365
Reference: B68-10124

Patent status:

This invention has been patented by NASA (U.S. Patent No. 3,364,813), and royalty-free license rights will be granted for its commercial development. Inquiries about obtaining a license should be addressed to NASA, Code GP, Washington, D.C. 20546.

Source: Royce L. McKinney
(LaRC-89)

NASA TECH BRIEF

NASA Tech Briefs are issued to summarize specific innovations derived from the U.S. space program, to encourage their commercial application. Copies are available to the public at 15 cents each from the Clearinghouse for Federal Scientific and Technical Information, Springfield, Virginia 22151.

Compensation Circuit Improves Operation of Inductive Coupling Transformers

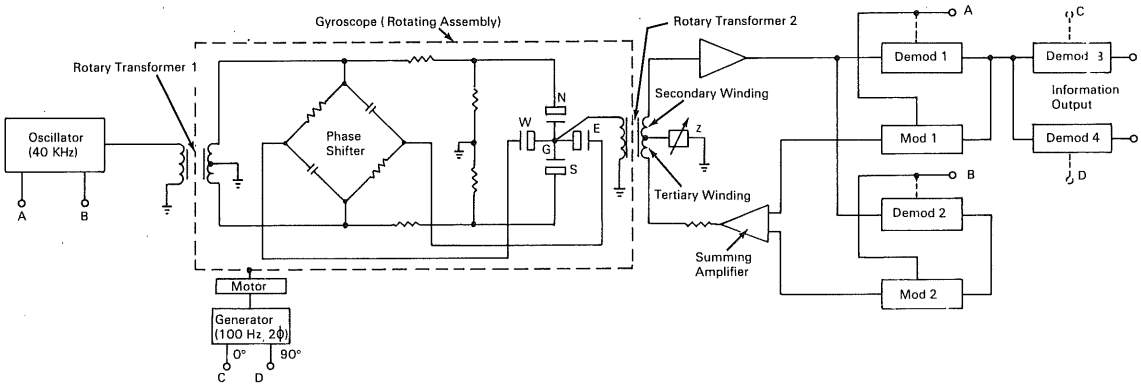

The problem:

To eliminate undesirable modulation effects in rotary transformers which transfer electrical energy to and from angular rate transducers on a gyroscope. This type of inductive coupling for energy transfer is free of the frictional effects that occur with brush–slip-ring combinations. However, a means is necessary for compensating the output of such a transformer when variable impedance or variable carrier phase effects occur. The output is generally undesirably modulated at the gyro rotor spin frequency, producing a bias error in the sense output of the system.

The solution:

Circuitry that cancels the error by feeding back compensation signals through a tertiary winding on the stator of the output rotary transformer. The circuitry is particularly useful where relatively high-frequency signals are employed as carriers in conjunction with the rotary transformers.

How it's done:

The system, employing 4 capacitive transducers (for a special fluid tube gyro), includes a 40 kHz oscillator, a 100 Hz generator, a phase shifter and a mod–demod network. Impedance level and narrow bandwidth problems are solved in the system by exciting the transducers, which sense the modulating information signal, at a relatively high frequency, 40 kHz. Without the 40 kHz carrier, the changes in transducer output caused by the 100 Hz spin frequency are too small to detect. The 40 kHz carrier, applied constantly to the transducers, is modulated by the spin frequency and displacement signals.

In operation of the compensation circuit, the 40 Hz oscillator supplies energy through the two sections of rotary transformer 1 to the phase shifter. The spinning element of the gyro is driven by a spin motor, which is coupled to the two-phase 100 Hz generator. Both the oscillator and the generator supply 0° and 90° reference signals, for subsequent use, at terminals, A, B, C, and D.

The phase shifter produces properly phased excitation for the four symmetrically arranged capacitive transducers N, E, S, and W. The 40 kHz carrier signal is applied to the phase shifter, a bridge network composed of two resistors and two capacitors. Thus, 180°

(continued overleaf)

This document was prepared under the sponsorship of the National Aeronautics and Space Administration. Neither the United States Government nor any person acting on behalf of the United States Government assumes any liability resulting from the use of the information contained in this document, or warrants that such use will be free from privately owned rights.

phase-shifted carrier signals excite the N and S transducers, and 90° and 270° phase shifted signals excite the E and W transducers. As the gyroscope is turned about either axis, phased spin frequency modulations are sensed by the transducers. These modulation signals appear at terminal G as a modulated SSB signal at the carrier-plus-spin frequency.

At the output of rotary transformer 2, undesired flux is modulated, causing offset errors in the control system. To generate the cancelling flux, an output is taken from the secondary winding of the rotary transformer output stator winding. It is amplified and then demodulated in demodulators 1 and 2 with respect to the 0° and 90° (A and B) phases of the 40 kHz oscillator voltage. This demodulation produces two spin-frequency signals and two unidirectional voltages. The unidirectional voltages are remodulated in modulators 1 and 2 with the same A and B reference signals. The resulting carrier frequency components are added in the summing amplifier, and the summed error signal is fed to the tertiary winding on the stator of rotary transformer 2. This cancels the unwanted flux. The effect of mutual coupling of the stator windings on rotary transformer 2 is balanced out by adjustment of impedance Z. The displacement-modulated spin frequency signal then remains. It is demodulated in demodulators 3 and 4 with respect to the 0° and 90° (C and D) reference signals from the 100 Hz generator, yielding the displacement signal or information.

Note:

Inquiries concerning this instrumentation may be directed to:

Technology Utilization Officer
Marshall Space Flight Center
Huntsville, Alabama 35812
Reference: B68-10129

Patent status:

No patent action is contemplated by NASA.

Source: Sperry Gyroscope Company
under contract to
Marshall Space Flight Center
(MFS-13801)

NASA TECH BRIEF

NASA Tech Briefs are issued to summarize specific innovations derived from the U.S. space program, to encourage their commercial application. Copies are available to the public at 15 cents each from the Clearinghouse for Federal Scientific and Technical Information, Springfield, Virginia 22151.

Phase-Lock Loop Frequency Control and the Dropout Problem

In the tracking of space satellites, receivers featuring phase-lock loop circuitry have been used to advantage, but usually, manual frequency adjustment is required to maintain contact. Additionally, such systems frequently suffer loss of signal (dropout) to a degree that reduces such manual frequency adjustment techniques to futile and frustrating "hunting" exercises. An investigation has been made into these problems and concepts derived that should eliminate or greatly relieve them.

A technique has been conceived for automatically setting the frequency of narrow band phase-lock loops within automatic lock-in range. In the past, phase-lock loops have been constrained so as to provide an automatic lock-in bandwidth sufficiently wide to accommodate both the uncertainty factor of the incoming frequency and the drift or uncertainty characteristics of the phase-lock loop.

In many applications it is desirable to construct a phase-lock loop possessing narrowband filter characteristics, while being capable of tracking or locking to a signal varying in frequency by a factor large relative to the filter bandwidth of that phase-lock loop. Such is the case for spacecraft phase-lock tracking receivers operating with a large frequency uncertainty due to the high relative velocities and resulting doppler effects as well as equipment drifts.

This concept suggests a means of automatically presetting a phase-lock loop to a desired center frequency by use of a closed loop electronic frequency discriminator, and holding the phase-lock loop to that center frequency until lock is achieved. Specifically, it uses a two-state digital frequency discriminator and a reference signal in a "bang-bang" type nonlinear frequency lock loop. In this manner the phase-lock loop is preset to, and dithered slightly around, a desired center frequency until the phase-lock is achieved. The phase-lock transfer characteristics of the loop are modified only slightly by the additional frequency lock circuit, thus providing normal phase-lock of the signal to override the frequency preset.

In a typical operation, there is a very good chance that the signal will disappear or fade so badly that the received signal-to-noise ratio will be inadequate to permit tracking. Should the condition persist, normal tracking procedures will not be able to recover the signal when it reappears. There are several reasons for this: acceleration during the dropout period, noise, and imperfect components. The latter is a practical matter, but even in the absence of equipment limitations, the problem still cannot be solved by conventional means.

This concept considers the limitations of conventional tracking methods and suggests a method which shows promise of being able to allow the system to carry through a dropout period of up to 2.5 seconds.

Although there may be a wide variety of causes of received signal dropout, there are two that are apt to occur in many operational situations. The first may occur during injection into orbit, immediately after which accurate tracking is desired. This dropout could occur rapidly and exhibit a very large reduction in signal strength; however, the accelerations are not expected to be inordinate at that time. The second cause is multipath, which causes fading. The rate of signal decay is probably lower and only under very special conditions can the received signal strength approach zero. The "down" time is generally less than during orbital injection.

In order to simplify the analysis and to permit readier understanding, a simplified carrier loop is analyzed. The principles can be applied without modification in systems that have recently been developed.

(continued overleaf)

This document was prepared under the sponsorship of the National Aeronautics and Space Administration. Neither the United States Government nor any person acting on behalf of the United States Government assumes any liability resulting from the use of the information contained in this document, or warrants that such use will be free from privately owned rights.

Whenever the signal is present, the phase-lock loop will track the phase of the received carrier. Depending upon the characteristics of the "tracking filter," the tracking capability is governed by the signal spectrum of the received phase. For example, if the received phase has constant rate, there will be a small phase tracking error with a Type I loop and none with a Type II loop. In general, one may assume that the loop response must be sufficient to track a fairly high acceleration for a period of seconds. As a result, under most conditions, the loop may be considered to have reached "equilibrium" in a short time before a drop-out might occur.

When signal dropout occurs, the control signal out of the phase detector vanishes but the noise does not, but may even increase if the agc falls. The loop is now open.

When the signal strength recovers, the loop will relock if the accumulated frequency error is not too large. An alternate method of recovery is to sense the signal loss in the agc circuit, open the loop until the system indicates recovered signal strength, whereupon the loop is reclosed. Under poor conditions neither method is acceptable without appreciable loop sophistication.

Note:

Copies of these concepts may be requested from:
Technology Utilization Officer
Marshall Space Flight Center
Huntsville, Alabama 35812
Reference: B68-10130

Patent status:

No patent action is contemplated by NASA.

Source: Stanley Attwood and Arthur J. Kline
of Motorola, Inc.
under contract to
Marshall Space Flight Center
(MFS-13948, 13950)

NASA TECH BRIEF

NASA Tech Briefs are issued to summarize specific innovations derived from the U.S. space program, to encourage their commercial application. Copies are available to the public at 15 cents each from the Clearinghouse for Federal Scientific and Technical Information, Springfield, Virginia 22151.

Improved Compensation Circuit for Direct-Coupled Amplifiers

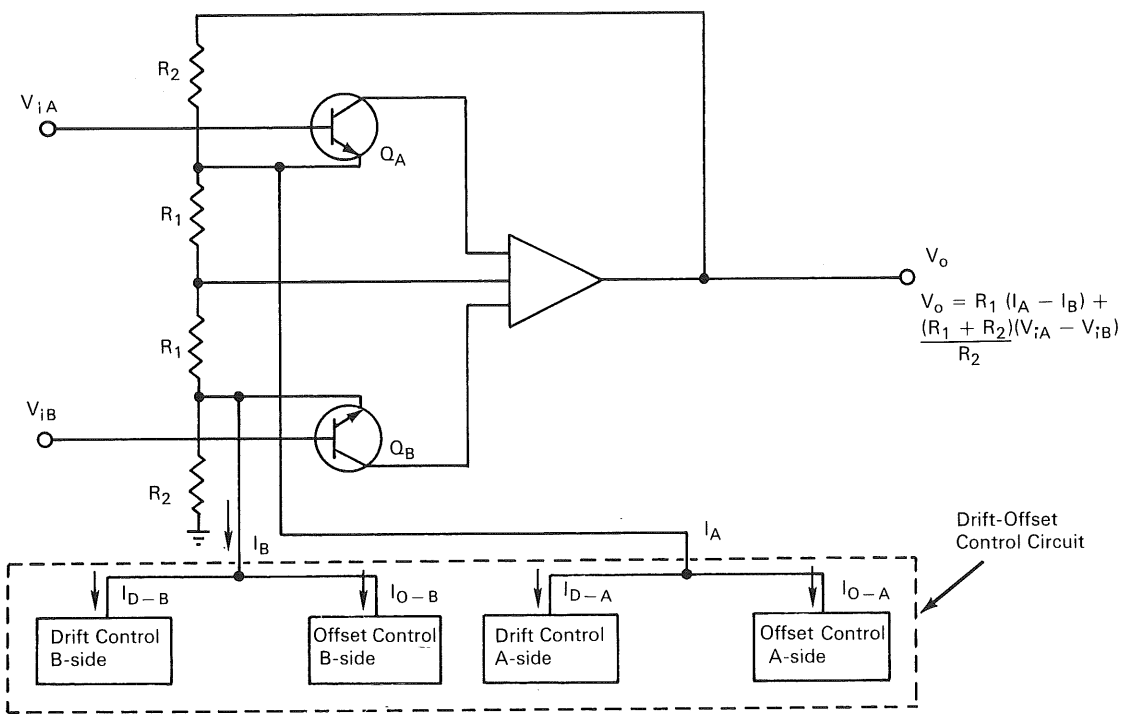

I_{O-A} and I_{O-B} : Temperature—Independent Currents
I_{D-A} and I_{D-B}: Linearly Temperature—Dependent Currents

An improved drift- and offset-control circuit (indicated in the blocked portion of the diagram) has been designed to compensate the inherent temperature drift and offset of a closed-loop feedback amplifier. The improved control circuit overcomes the disadvantages (chopping spikes, undesirable dynamic characteristics, and bulk due to large capacitors) of conventional chopping circuits used to minimize drift in low-level, direct-coupled amplifiers. This circuit has kept equivalent input drifts down to 0.05 microvolt per degree centigrade over a −40° to +100°C temperature range. The power turn-on time and overload settling time are orders of magnitude faster than for chopping-type amplifiers, thus allowing the amplifier to be power gated. The circuit inherently allows monolithic integration of the entire amplifier in a 3/8-inch-square flat package.

In the diagram, Q_A and Q_B are the input transistors of the amplifier. Resistors R_1 and R_2 form the overall emitter feedback network. Currents are drawn from the R_1–R_2 nodes by the drift-offset control circuit to compensate the inherent linear temperature

(continued overleaf)

This document was prepared under the sponsorship of the National Aeronautics and Space Administration. Neither the United States Government nor any person acting on behalf of the United States Government assumes any liability resulting from the use of the information contained in this document, or warrants that such use will be free from privately owned rights.

drift of the amplifier. Post-fabrication adjustment of the resistors (cermet thin film) are made as required to compensate a particular amplifier.

Patent status:

Title to this invention has been waived under the provisions of the National Aeronautics and Space Act [42 U.S.C. 2457 (f)], to the TRW Space Technology Laboratories, One Space Park, Redondo Beach, California 90278.

Source: D. R. Breurer
of TRW Space Technology Laboratories
under contract to
Manned Spacecraft Center
(MSC-11148 and 11235)

NASA TECH BRIEF

NASA Tech Briefs are issued to summarize specific innovations derived from the U.S. space program, to encourage their commercial application. Copies are available to the public at 15 cents each from the Clearinghouse for Federal Scientific and Technical Information, Springfield, Virginia 22151.

Electronic Calorimetric Computer

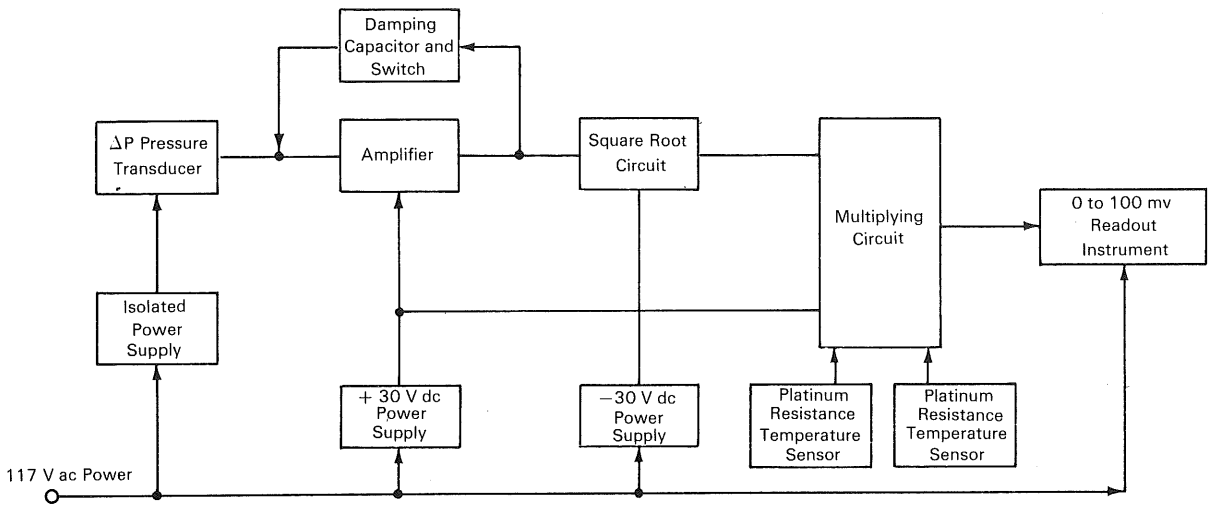

A calorimetric computer has been designed to calculate nuclear reactor thermal power output to a nominal accuracy of 1%. A heat balance is determined by an electronic rather than an electromechanical approach. The thermal power is calculated using the inlet and outlet temperatures and the volume of cooling water. This power or, selectively, any of the component function values, can be displayed by a digital readout system.

In operation, two similar channels operate from a common +30 vdc and −30 vdc power source. Each channel uses three sensors to gather data: a differential pressure (ΔP) transducer whose voltage output is a function of coolant flow, and two platinum temperature sensitive resistors that measure the system differential temperature (ΔT). The thermal power is proportional to flow times ΔT.

A highly regulated dc voltage is applied to the ΔP transducer whose output of approximately 0 to 25 mv is raised to 0 to 10 v by the amplifier whose gain is varied to span the channel. Damping in the coolant flow circuit is by a capacitor in the feedback loop of the amplifier. Output of the amplifier is fed to the square root circuit whose 0 to 10 v output is proportional to coolant flow. Flow $= K\sqrt{\Delta P}$, where K is a constant determined by circuit values and flow tube characteristics. The square root circuit consists of an operational amplifier with a special nonlinear resistor, having a parabolic e vs i characteristic, in its feedback circuit. This resistor is mounted in an oven operated at constant temperature to maintain an accuracy of 0.2%.

The multiplying circuit is a bridge that provides the product of a voltage proportional to coolant flow and a differential resistance proportional to differential temperature, the resultant product being a voltage proportional to reactor thermal power. The platinum temperature sensitive resistors, sensing core inlet and

(continued overleaf)

This document was prepared under the sponsorship of the National Aeronautics and Space Administration. Neither the United States Government nor any person acting on behalf of the United States Government assumes any liability resulting from the use of the information contained in this document, or warrants that such use will be free from privately owned rights.

core outlet temperatures, form two legs of the bridge, whose excitation voltage is the output of the square root circuit.

Notes:

1. With modification, this computer could be used to monitor or control either or both flow systems of heat exchangers in industrial applications.
2. Inquiries concerning this innovation may be directed to:

   Technology Utilization Officer
   Lewis Research Center
   21000 Brookpark Road
   Cleveland, Ohio 44135
   Reference: B68-10138

Patent status:

No patent action is contemplated by NASA.

Source: James D. Heckelman
(LEW-90254)

NASA TECH BRIEF

NASA Tech Briefs are issued to summarize specific innovations derived from the U.S. space program, to encourage their commercial application. Copies are available to the public at 15 cents each from the Clearinghouse for Federal Scientific and Technical Information, Springfield, Virginia 22151.

Instrumentation for Bone Density Measurement

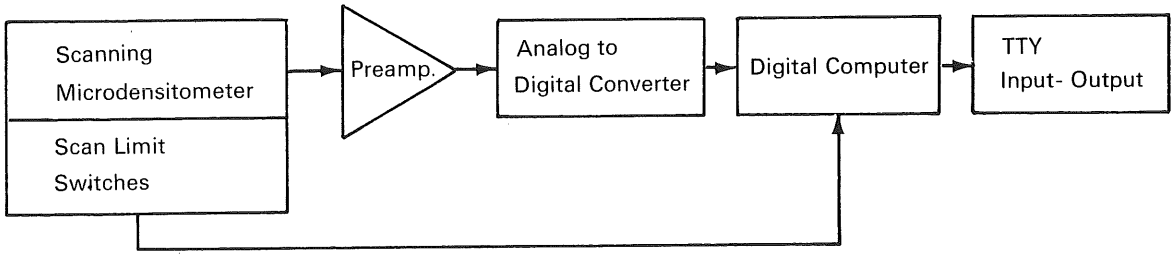

Bone density measurement systems with quite acceptable accuracy have been in use for some time. However, as increased interest in this area demands more and more data, the analog instrumentation used for data reduction lacks sufficient speed.

The basic measurement system evaluates the integrated bone density over a specific cross section of bone. A roentgenogram of a standard aluminum calibration wedge and the bone specimen is obtained in a single exposure. Optical transmittance of the developed film is then measured by means of a scanning microdensitometer. The image of the wedge is first scanned to determine optical transmittance versus wedge thickness as recorded on the film. Graphical representation of the optical scanner output for a scan of the wedge image is in the form of an output voltage curve. The bone image is scanned next along the desired cross section, resulting in a second output voltage curve. These curves are the basic inputs for measurement of bone density.

The computation system must now convert the voltage output for the bone scan to a curve of equivalent density (in terms of wedge thickness) and integrate the area under the resulting curve. Conversion between output for the bone scan and equivalent wedge thickness is made using the wedge scan curve. The curve is entered at the value of optical scanner output and wedge thickness is read on the abscissa. This equivalent wedge thickness is used in the subsequent integration of the density.

In one analog system, in use for many years, conversion between optical scanner output during bone scan and equivalent wedge thickness, is made by using a nonlinear resistance slidewire output from a chart recorder. Integration is accomplished with an electromechanical integrator.

A system using a digital computer has been implemented to perform the computation functions similar to those performed by the analog system. Optical scanner output voltage is converted to a digital format for storage and subsequent processing by a digital computer. After both wedge and bone scans have been completed, the computer converts stored bone scan data to equivalent wedge thickness by using the stored wedge scan data. Bone density is then integrated along the scan by using the trapezoidal approximation integration formula. A block diagram of the digital instrumentation is shown in the figure.

In operation, data collection by the computer is controlled by the limit switches of the densitometer, which mark the beginning and end of the scans. Sampling times are controlled by a clock in the computer. The teletype unit is used to control the computer by directing it to prepare for a wedge or bone

(continued overleaf)

This document was prepared under the sponsorship of the National Aeronautics and Space Administration. Neither the United States Government nor any person acting on behalf of the United States Government assumes any liability resulting from the use of the information contained in this document, or warrants that such use will be free from privately owned rights.

scan, specifying bone scan speed used, specifying printout options desired, and is also used in typing identifying information on the printout.

Note:

Inquiries concerning this innovation may be directed to:

Technology Utilization Officer
Manned Spacecraft Center
Houston, Texas 77058
Reference: B68-10140

Patent status:

No patent action is contemplated by NASA.

Source: Louis S. Meharg
of Kaman Instruments
under contract to
Manned Spacecraft Center
(MSC-11388)

NASA TECH BRIEF

NASA Tech Briefs are issued to summarize specific innovations derived from the U.S. space program, to encourage their commercial application. Copies are available to the public at 15 cents each from the Clearinghouse for Federal Scientific and Technical Information, Springfield, Virginia 22151.

Stereo Photomacrography System

The problem:

To provide sharply focused and correctly exposed stereo pairs of photographs through a stereomicroscope. Current art suffers from the fact that the stereomicroscope is visually focused and subject to variations dependent on adaptability of the eye, while exposures are suggested in broad general terms. Focus and exposure in this mode are by trial and error.

The solution:

A newly developed system that uses components of the old system but incorporates a sharp focusing system new to stereo photomacrography and includes an improved photometer.

The sharp focusing system includes the following items that are departures from and improvements to prior art: a medium power focusing microscope, a finely ruled reticule, and a specially designed specimen stand. The focusing microscope provides fairly large coverage combined with a very limited depth of field and is mounted on a triaxial rack and pinion mechanism that permits motion perpendicular to the camera film plane and adjustable within the two axes of that plane. The finely ruled reticule establishes the film plane position within the camera to a fine, discrete tolerance. The specially designed specimen stand includes a positive micrometer motion control and a dial indicator that facilitates precise repositioning of the specimen for each magnification setting of the microscope.

Notes:

1. Use of the sensitive photoconductive cell and photometer with a small photosensitive cell area permits the operator to examine various parts of the specimen image to aid in exposure and focusing decisions.
2. Inquiries concerning this invention may be directed to:

   Technology Utilization Officer
   Langley Research Center
   Langley Station
   Hampton, Virginia 23365
   Reference: B68-10141

Patent status:

Inquiries about obtaining rights for the commercial use of this invention may be made to NASA, Code GP, Washington, D.C. 20546.

Source: Walter F. Lindsey
(LAR-10176)

Category 01

This document was prepared under the sponsorship of the National Aeronautics and Space Administration. Neither the United States Government nor any person acting on behalf of the United States Government assumes any liability resulting from the use of the information contained in this document, or warrants that such use will be free from privately owned rights.

NASA TECH BRIEF

NASA Tech Briefs are issued to summarize specific innovations derived from the U.S. space program, to encourage their commercial application. Copies are available to the public at 15 cents each from the Clearinghouse for Federal Scientific and Technical Information, Springfield, Virginia 22151.

Cardiac R-Wave Detector

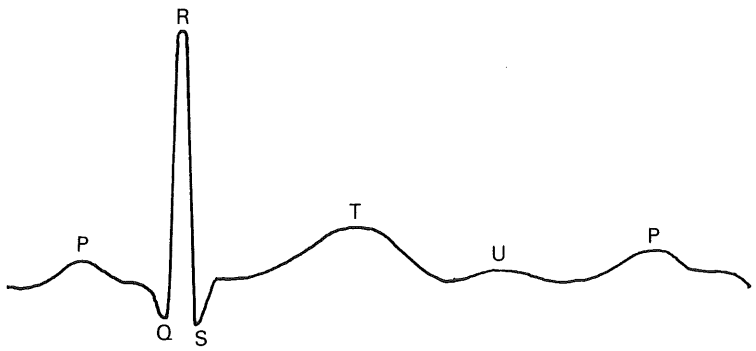

EKG Input Waveform

The problem:

To obtain a reliable signal from a natural heart's systolic contraction in order to coordinate the action of a heart-assist device with the action of the failing natural heart.

The solution:

A cardiac R-wave detector (designed from aerospace controls systems technology) that processes the natural heart's electrocardiac signal in a sequence of operations which essentially eliminates all components from the input signal except the R-wave.

How it's done:

At the beginning of the heart's pumping cycle, the isometric contraction of the ventricular muscle mass generates a pronounced electrical signal known as the QRS wave complex of the electrocardiogram (EKG). The R-wave portion of the QRS complex can be detected and used as the reference signal for a heart-assist pump cycle. The cardiac R-wave detector obtains an input signal from surface electrodes attached to the patient's right arm and left leg and produces an electrical output pulse used to actuate a heart-assist device. It does not require the use of blood pressure or pump pressure waves.

The cardiac R-wave detector processes the input signal in a sequence of operations which detects the R-wave in the presence of high electrical interference. All false signals except those generated by vigorous motion or extreme muscle tensions are rejected. In succession, the detector's electronic circuit rejects signals that occur equally from the two surface electrodes attached to the patient's body, attenuates low- and high-frequency components, rejects low amplitude signals, rejects short duration signals, and rejects signals during the pumping time of the heart assist pump.

Notes:

1. Advantages of this detector, compared to conventional detectors, appear to include: better discrimination between the R and T waves, generally better noise filtering characteristics, and flexibility in the polarity of the trigger pulse.
2. Details of design and operation are described in NASA Technical Memorandum X-1489, "Cardiac R-Wave Detector," by Vernon D. Gebben.

(continued overleaf)

This document was prepared under the sponsorship of the National Aeronautics and Space Administration. Neither the United States Government nor any person acting on behalf of the United States Government assumes any liability resulting from the use of the information contained in this document, or warrants that such use will be free from privately owned rights.

3. Inquiries concerning this innovation may be directed to:

Technology Utilization Officer
Lewis Research Center
21000 Brookpark Road
Cleveland, Ohio 44135
Reference: B68-10144

Patent status:

No patent action is contemplated by NASA.

Source: Vernon D. Gebben
(LEW-10394)

NASA TECH BRIEF

NASA Tech Briefs are issued to summarize specific innovations derived from the U.S. space program, to encourage their commercial application. Copies are available to the public at 15 cents each from the Clearinghouse for Federal Scientific and Technical Information, Springfield, Virginia 22151.

Flare Angles Measured with Ball Gage

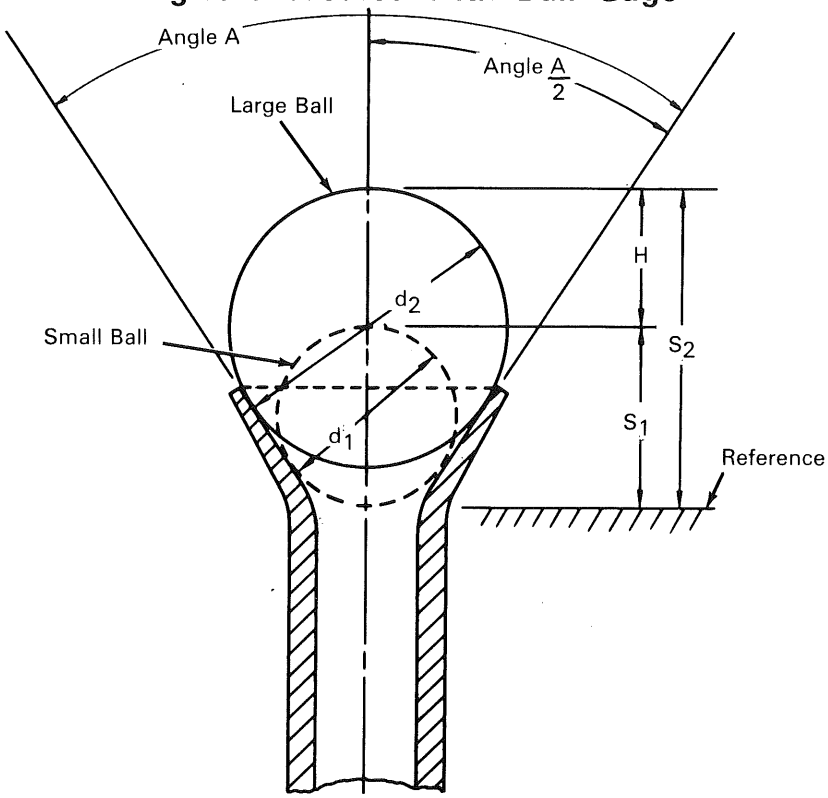

Tubing joints have always been subject to leakage problems wherever high pressures, extreme temperature gradients, or excessive vibration have been involved. As a result, it is necessary to fabricate flared joints to very exacting standards and this requires precise means of measuring the internal angle of the planes. Prior methods involved making of a plaster or plastic cast of the internal flare and then inspecting the cast on an optical comparator.

A new method has been devised that uses precision tungsten carbide balls to measure the internal flare angle. Measurement is made by placing a small ball into the throat of the flare, as shown in the sketch. The distance S_1 from the top of the ball to an external reference point is then measured. A larger ball is then placed in the flare and the distance S_2 from the top of the ball to the same reference point is measured. The difference H in distances (S_2-S_1) to the reference point, and the difference in diameters d_1 and d_2 of the two balls determine the average slope of the flare between the points of ball contact. Thus, the required angle A is determined by:

$$\text{Cosec}\,\frac{A}{2} = \frac{2H}{d_2-d_1} - 1.$$

(continued overleaf)

This document was prepared under the sponsorship of the National Aeronautics and Space Administration. Neither the United States Government nor any person acting on behalf of the United States Government assumes any liability resulting from the use of the information contained in this document, or warrants that such use will be free from privately owned rights.

Note:

Inquiries concerning this invention may be directed to:

Technology Utilization Officer
Marshall Space Flight Center
Huntsville, Alabama 35812
Reference: B68-10030

Patent status:

This invention has been patented by NASA (U.S. Patent No. 3,360,864), and royalty-free license rights will be granted for its commercial development. Inquiries about obtaining a license should be addressed to NASA, Code GP, Washington, D.C. 20546.

Source: David Cleghorn and William A. Wall
(MFS-14690)

NASA TECH BRIEF

NASA Tech Briefs are issued to summarize specific innovations derived from the U.S. space program, to encourage their commercial application. Copies are available to the public at 15 cents each from the Clearinghouse for Federal Scientific and Technical Information, Springfield, Virginia 22151.

Self-Correcting, Synchronizing Ring Counter Using Integrated Circuit Devices

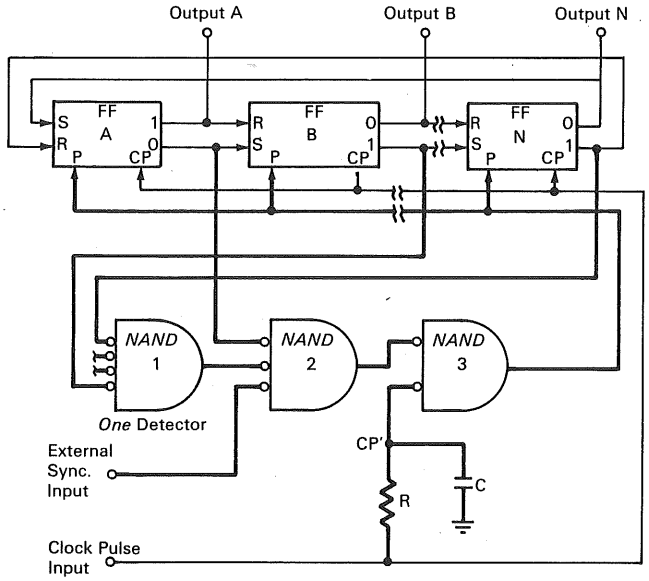

FIGURE 1. SIMPLIFIED DIAGRAM

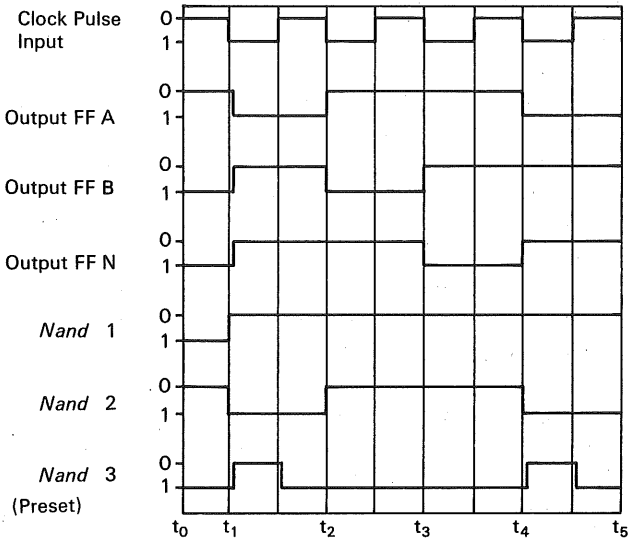

FIGURE 2. PRESET AND TIMING SIGNAL SEQUENCE OF CIRCUIT USING NEGATIVE TRUE LOGIC

The problem:

To initiate and retain the correct binary state in the flip-flop circuits of a ring counter so as input signals are counted, the position of the specified state moves in an ordered sequence around the circuit loop. When power is turned on, the circuit is likely to be in an incorrect state. Error occurs at power-on if any flip-flops other than the first flip-flop contain an *on* (i.e., using negative true logic, a logical *one* state). Error also occurs during operation if a flip-flop other than the specified circuit contains an *on* or logical *one* state. Conventional monitoring techniques require complex circuit configurations and a large number of gate circuits to detect an error.

The solution:

Add error detection and reset logic circuitry using only three *nand* gate circuits.

How it's done:

Figure 1 shows conventional ring counter circuitry with error detection and reset logic circuitry added (in heavy lines). The necessary initial circuit condition is to have the output of first integrated circuit flip-flop (A) in the logical *one* condition. When this is so, a preset pulse P is simultaneously applied to all flip-flops of the ring counter from *nand* gate 3 resulting in any extraneous logical *one's* being reset to *off* (i.e., a logical *zero* state). Thus, the circuit is ready for operation, the logical *one* condition of flip-flop A will

(continued overleaf)

This document was prepared under the sponsorship of the National Aeronautics and Space Administration. Neither the United States Government nor any person acting on behalf of the United States Government assumes any liability resulting from the use of the information contained in this document, or warrants that such use will be free from privately owned rights.

advance to each successive flip–flop in the loop as the clock pulse (CP) input signals are counted.

By adding a single input to the second *nand* gate (2), an external signal may be applied to synchronize the ring counter with another external source.

The CP input is applied to the final gate (3) so that the preset pulse P will not last into the following clock time and hold the ring counter in the initial state. The CP input to the last gate is slightly delayed by an RC network; so the flip–flops have time to settle before being error-detected.

Considering the worst possible turn-on circuit condition, where output A is a logical *zero* and outputs B and N are logical *one's,* a signal sequence is shown at t_0 in Figure 2. Since the flip–flop outputs are in these conditions, *nand* gate 1 output will be in the logical *one* state, because of the redundant logical *zero* input detection, ("1" = $\overline{B \cdot N}$), *nand* gate 2 will have a logical *zero* output because of the *one* input from *nand* gate 1, "1" = (NB) A (the same as positive logic A + BN). At t_1, *nand* gate 3 will have a logical *zero* output, because of the logical *one* input from *nand* gate 2 and the logical *one*-going portion of the clock pulse ("1" = A + B · N · CP'). Therefore, a preset signal (P) is sent to the flip–flops until *nand* gate 3 returns to *one*, during the logical *zero* swing of the clock pulse. The preset signal forces output A to become logical *one* and outputs B through N to become logical *zero's*. The preset input is the only part of the circuit using positive logic.

The preset pulse changes each flip–flop circuit from the worst-case condition; output A goes to a logical *one*, and outputs B through N go to logical *zero's*. When the clock pulse returns to the logical *zero* state, *nand* gate 3 returns to a logical *one* and the preset pulse is terminated. *Nand* gate 2 retains its logical *one* state because of the *one* input from flip–flop A.

Nand gate 1, no longer sensing logical *one's* in flip–flops B through N, changes to a logical *zero*. Thus, normal operation begins with the preset pulse application at t_1.

At t_2, output A will change to a logical *zero* and output B to the logical *one* state. *Nand* gate 2 no longer senses a logical *one* in flip–flop A and returns to a logical *zero*.

The next count, beginning at t_3, the CP and the output of flip–flop B causes flip–flop N to set to a logical *one*. *Nand* gate 1, still sensing a logical *one* from flip–flop N, holds the state preventing any change in the preset circuitry. Flip–flop N outputs are returned to the inputs of flip–flop A, and in sequence with the *zero*-going CP, at t_4, flip–flop N passes the *one* to flip–flop A, accepts the *zero* in flip–flop B, and completes a correct cycle of ring counter operation.

A redundant preset pulse will be generated when *nand* gate 2 senses a logical *one* in flip–flop A. If an extraneous logical *one* were to appear in the ring counter for any other reason, either *nand* gate 1 or 2 would have sensed it and caused *nand* gate 3 to preset the counter back to t_1 condition.

Note:

Inquiries concerning this circuit may be directed to:

Technology Utilization Officer
Marshall Space Flight Center
Huntsville, Alabama 35812
Reference: B68-10067

Patent status:

No patent action is contemplated by NASA.

Source: W. A. Maasberg
of International Business Machines Corporation
under contract to
Marshall Space Flight Center
(MFS-13901)

NASA TECH BRIEF

NASA Tech Briefs are issued to summarize specific innovations derived from the U.S. space program, to encourage their commercial application. Copies are available to the public at 15 cents each from the Clearinghouse for Federal Scientific and Technical Information, Springfield, Virginia 22151.

Method of Disjoining Adhesively Bonded Electronic Cordwood Modules

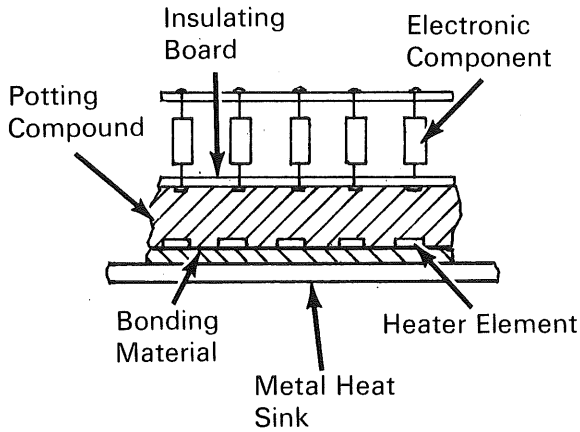

Cordwood modules used for high-density, low-weight packaging of electronic components have presented a maintainability problem in aerospace service. Removal of a specific module from a dense component package requires separation of the adhesive bond between the module and the surface of a metal heat sink and also between the module and the surface of the potting material. Mechanical means which are generally used for disjoining the modules from the bonded heat sink and potting material surfaces often result in destruction of the module.

A method has been developed for disjoining electronic modules which are adhesively bonded to a heat sink surface without damaging the module to be removed or surrounding modules. The method involves the embedment of resistive heating elements arranged in an analytically derived pattern in the module. When a specific module is to be removed from a dense electronic package, a short burst of electrical power is applied across the embedded heater elements. The resulting heat pulse localizes the corresponding high temperature so that breakdown of the bonding material occurs without affecting the electronic components. The electronic module may then be easily removed and subjected to failure analysis. The repaired module or another one in good working order can be bonded to the same heat sink surface from which the defective module was removed.

The spacing of the heater elements, the pulse height (temperature), and pulse width (time interval) of the heat pulse to be applied to specific modules was determined from the solution of differential equations relating the aforementioned parameters to the thermal conductivity, specific heat, and density of the material.

Note:

Complete technical details may be obtained from:
Technology Utilization Officer
Manned Spacecraft Center
Houston, Texas 77058
Reference: B68-10086

Patent status:

This invention is owned by NASA, and a patent application has been filed. Royalty-free, nonexclusive

(continued overleaf)

This document was prepared under the sponsorship of the National Aeronautics and Space Administration. Neither the United States Government nor any person acting on behalf of the United States Government assumes any liability resulting from the use of the information contained in this document, or warrants that such use will be free from privately owned rights.

licenses for its commercial use will be granted by NASA. Inquiries concerning license rights should be made to NASA, Code GP, Washington, D.C. 20546.

Source: P. J. Sacramone
of Radio Corporation of America
under contract to
Manned Spacecraft Center
(MSC-12060)

NASA TECH BRIEF

NASA Tech Briefs are issued to summarize specific innovations derived from the U.S. space program, to encourage their commercial application. Copies are available to the public at 15 cents each from the Clearinghouse for Federal Scientific and Technical Information, Springfield, Virginia 22151.

Alternating Current Electromagnetic Servo Induction Meter

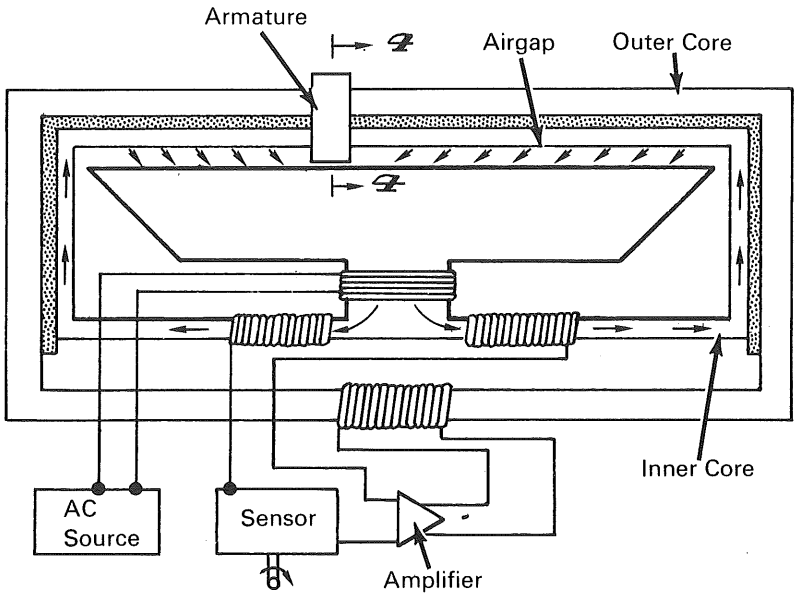

The problem:

A simple and reliable display instrument is required for use in high performance flight research aircraft to accurately indicate the responses of various sensors to conditions encountered in flight. Prior devices, while satisfactory, have imposed weight and space penalties, due to their complexity, that are undesirable in an already cluttered instrument panel.

The solution:

A simple electromagnetic device that responds to sensor inputs to move a slideable armature along an indicator scale by the force of currents induced in the armature winding. The armature is the only moving part in the device and has a single winding.

How it's done:

The instrument has an inner core and an outer core around which a slideable armature, having a single turn of conductor material, is connected. The top of the outer core is scribed to form an incremental scale determining armature travel. The inner core consists of two members that form an airgap between them. An ac excited coil, on the central member, generates a reversing flux flow in the core to establish a reversing magnetic field in the airgap. The armature conductor extends through the airgap to form a flux barrier that effectively divides the inner core into two halves. Flux flow through each half is controlled by the length of its airgap as determined by the position of the armature.

The two coils about the lower side of the inner core have current flow induced in them by the flux flowing in the inner core, their output magnitudes and polarities being determined by the position of the armature. The outputs of these two coils (or either of them) and of the sensor are compared and when a correction is

(continued overleaf)

This document was prepared under the sponsorship of the National Aeronautics and Space Administration. Neither the United States Government nor any person acting on behalf of the United States Government assumes any liability resulting from the use of the information contained in this document, or warrants that such use will be free from privately owned rights.

needed to the position of the armature, a signal is fed to the amplifier which excites the coil around the lower portion of the outer core. This generates a reversing flux flow in the outer core to induce current flow in the armature. Induced current flowing in the airgap magnetic field applies a force to the armature, causing it to move along the scale to a point that correctly indicates the sensed condition. Magnitude and direction of the force acting on the armature are varied by controlling the magnitude and phase angle relationship of the airgap magnetic field and the current induced in the armature.

Patent status:

This is the invention of a NASA employee, and U.S. Patent No. 3,341,834 has been issued to him. Inquiries about obtaining license rights for its commercial development should be addressed to the inventor, Mr. R. K. Bogue at Flight Research Center, Edwards Air Force Base, California 93523.

Source: (XFR-03838)

NASA TECH BRIEF

NASA Tech Briefs are issued to summarize specific innovations derived from the U.S. space program, to encourage their commercial application. Copies are available to the public at 15 cents each from the Clearinghouse for Federal Scientific and Technical Information, Springfield, Virginia 22151.

Automated Patient Monitoring System

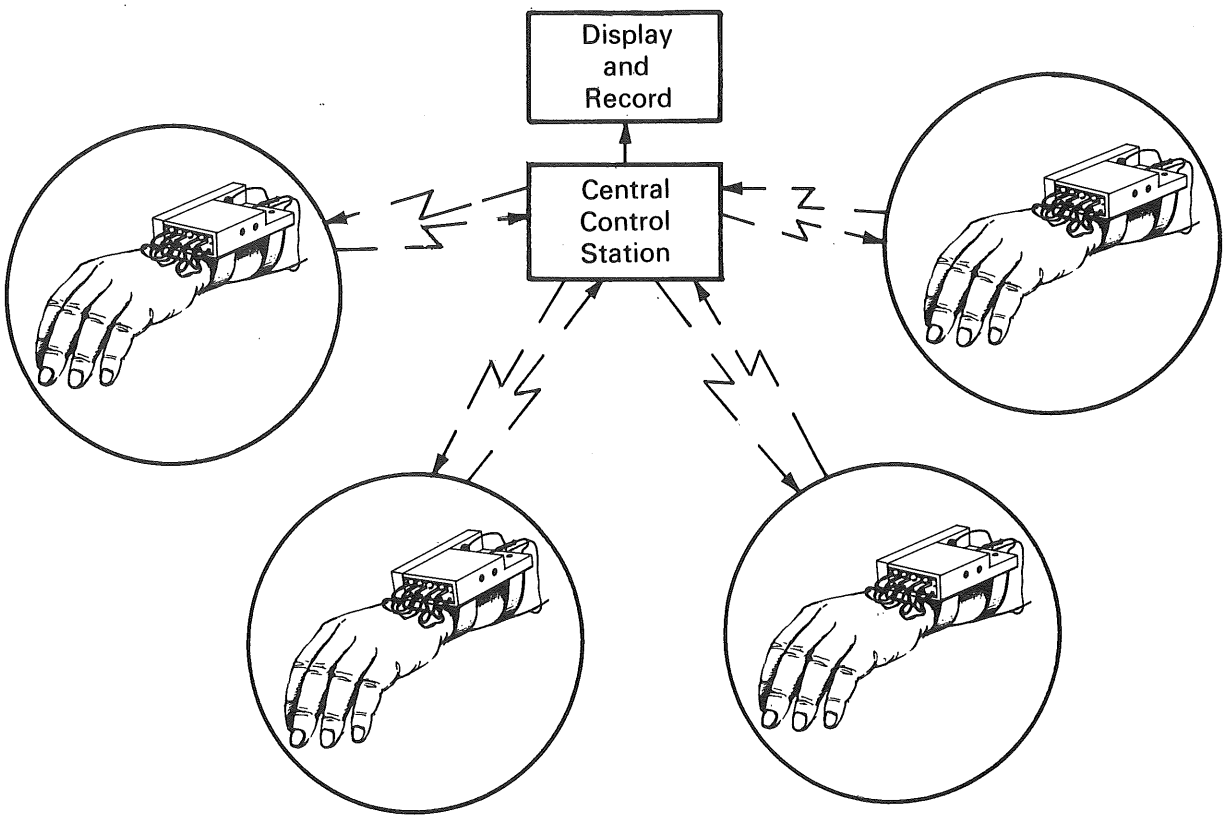

A radio-linked patient monitoring system (designated "Automated Patient Care System"), which has been designed and placed into operation for feasibility testing, is capable of collecting several channels of physiological data from as many as 64 hospital patients and transmitting the data to a central control station. The information is transmitted in digital form which can be directly processed by a computer.

The system consists of a central control station and battery-operated patient units comprising small strap-on electronics packages designed to ensure minimum encumbrance and discomfort to the patients, who may be either ambulatory or bedridden. A complete patient unit including battery weighs less than one pound. Conventional biomedical sensors are associated with each patient unit. Typically, sensors include

(continued overleaf)

This document was prepared under the sponsorship of the National Aeronautics and Space Administration. Neither the United States Government nor any person acting on behalf of the United States Government assumes any liability resulting from the use of the information contained in this document, or warrants that such use will be free from privately owned rights.

4 electrocardiogram electrodes, 2 thermistors for temperature measurement, and a strain gage consisting of a mercury-filled silicone rubber tube which is slipped over a big toe or a thumb to monitor blood pressure pulsations.

The central control station and patient units share a single broadcast frequency pair. A patient unit is not active until it is interrogated by the control station and signaled to transmit its data for central display and recording. During normal "all patients" operation, each of the patient units in the system is interrogated in turn for two seconds by a coded message from the central control station. In this period, the patient unit addressed transmits its data to the central station for display and/or recording. In the "single patient" mode of operation, any patient can be continuously monitored by setting a selector switch in the central station to the desired patient number.

Notes:

1. The feasibility of this system has been demonstrated in tests involving two patient units at distances of more than 125 feet from the central station. With further development, a system is envisioned which would enable several central stations to monitor the physiological condition of a large number of patients for routine detection and treatment of disease. Particularly advantageous application of this system would be in intensive-care wards.
2. With appropriate selection of transducers and signal conditioning circuitry, the system could be used to monitor a wide variety of industrial processes.
3. A related multichannel implantable telemetry system is described in Tech Brief B68-10065. Inquiries may also be directed to:

   Technology Utilization Officer
   Marshall Space Flight Center
   Huntsville, Alabama 35812
   Reference: B68-10131

Patent status:

Inquiries about obtaining rights for the commercial use of this invention may be made to NASA, Code GP, Washington, D.C. 20546.

Source: R. E. Bedard, W. S. Dawson, and R. L. Buxton
of The Boeing Company
under contract to
Marshall Space Flight Center
(MFS-14552)

NASA TECH BRIEF

NASA Tech Briefs are issued to summarize specific innovations derived from the U.S. space program, to encourage their commercial application. Copies are available to the public at 15 cents each from the Clearinghouse for Federal Scientific and Technical Information, Springfield, Virginia 22151.

High-Pressure Gas Facilitates Calibration of Turbine Flowmeters for Liquid Hydrogen

Nitrogen gas at a pressure of 60 atmospheres and ambient temperature permits accurate and relatively inexpensive calibration of turbine flowmeters used for monitoring the flow of liquid hydrogen in cryogenic systems. The effectiveness of 60-atmosphere nitrogen gas as a meter calibration fluid for liquid hydrogen has been experimentally established for three different internal configurations of 1.5-inch turbine flowmeters. The experimental measurements show that full-scale calibration factors can be obtained to an accuracy of 0.4 percent. Typical meter repeatability obtained with the nitrogen gas for a 95 percent confidence band is ±0.3 percent. All of the accuracy values include an analytically derived thermal-correction factor for non-zero blade clearance.

Notes:

1. Calibration of turbine flowmeters using liquid hydrogen itself as the working fluid is both time consuming and costly.
2. For the majority of flowmeters tested, liquid hydrogen calibrations were more accurately simulated by using the high-pressure nitrogen gas rather than water as the test fluid (see Tech Brief 67-10506).
3. Complete technical details are given in NASA TN D-3773, "Simulation of Liquid-Hydrogen Turbine-Type Flowmeter Calibration Using High-Pressure Gas," by A. J. Szaniszlo and L. N. Krause, December 1966, available from the Clearinghouse for Federal Scientific and Technical Information, Springfield, Virginia 22151. Inquiries may also be directed to: Technology Utilization Officer
   Lewis Research Center
   21000 Brookpark Road
   Cleveland, Ohio 44135
   Reference: B68-10145

Patent status:

No patent action is contemplated by NASA.

Source: A. J. Szaniszlo and L. N. Krause (LEW-10402)

Category 01

This document was prepared under the sponsorship of the National Aeronautics and Space Administration. Neither the United States Government nor any person acting on behalf of the United States Government assumes any liability resulting from the use of the information contained in this document, or warrants that such use will be free from privately owned rights.

AEC-NASA TECH BRIEF

AEC-NASA Tech Briefs describe innovations resulting from the research and development program of the U.S. AEC or from AEC-NASA interagency efforts. They are issued to encourage commercial application. Tech Briefs are published by NASA and may be purchased, at 15 cents each, from the Clearinghouse for Federal Scientific and Technical Information, Springfield, Virginia 22151.

Silicon Solar Cell Monitors High Temperature Furnace Operation

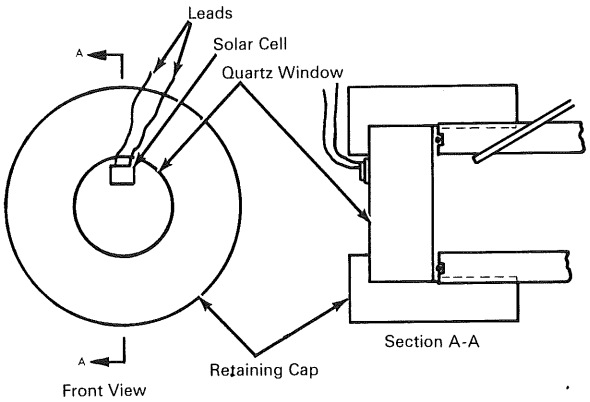

INSTALLATION OF SILICON SOLAR CELL

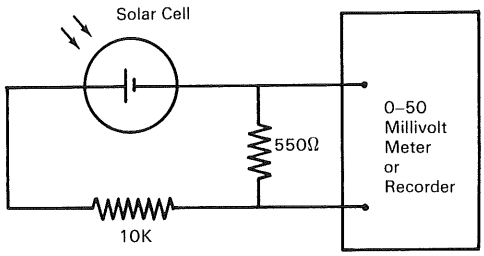

RECORDING CIRCUIT

The problem:

To continuously monitor a furnace operating at high temperatures and pressures without interfering with the test assembly or optical pyrometry during the test, and at lowest possible cost.

The solution:

Attach a small silicon solar cell to each viewport to monitor the incandescent emission (which is a function of temperature) from the hot interior of the furnace. This technique can provide continuous indication of hot spots or provide warning of excessive temperatures in cooler regions. Since silicon solar cells are self-generating, they can be connected directly to a calibrated meter or used as the control signal source for an alarm system. Normal optical pyrometry is still possible for higher accuracy measurements.

How it's done:

Silicon solar cells 0.2 inch x 0.2 inch are cemented directly to the pyrex or quartz sight ports, using a clear epoxy. The cells are located on the ports to receive direct radiant emission from the hot body. Because of the small size of the solar cells it is possible, on a half-inch diameter or larger sight port, to view the same body with a conventional optical pyrometer while the solar cell is installed. This permits direct individual calibration if required. The output of the solar cell is connected directly to a voltmeter, recorder, or alarm system. Solar cells thus installed on a high-temperature thermocouple test furnace have been found to operate within a +2% band over a temperature range from 2200° to 4800° R.

Notes:

1. The overall cost of a solar cell/voltmeter unit is under $50 (cells cost under $2.00).
2. Thermocouples capable of operating over the same range with similar accuracy would cost between $500 and $1000 each, and would possibly affect test assembly geometry. Readout equipment would be an additional cost.
3. Automatic optical pyrometers for this temperature range cost approximately $5000 each.

(continued overleaf)

This document was prepared under the sponsorship of the Atomic Energy Commission and/or the National Aeronautics and Space Administration. Neither the United States Government nor any person acting on behalf of the United States Government assumes any liability resulting from the use of the information contained in this document, or warrants that the use of any information, apparatus, method, or process disclosed in this document may not infringe privately owned rights.

4. Inquiries concerning this innovation may be directed to:

Technology Utilization Officer
AEC–NASA Space Nuclear
Propulsion Office
U.S. Atomic Energy Commission
Washington, D.C. 20545
Reference: B68-10148

Patent status:

No patent action is contemplated by AEC or NASA.

Source: G. J. Zellner
of Westinghouse Astronuclear Laboratory
under contract to
AEC-NASA Space Nuclear Propulsion Office
(NUC-10163)

NASA TECH BRIEF

NASA Tech Briefs are issued to summarize specific innovations derived from the U.S. space program, to encourage their commercial application. Copies are available to the public at 15 cents each from the Clearinghouse for Federal Scientific and Technical Information, Springfield, Virginia 22151.

System Remotely Inspects, Measures, and Records Internal Irregularities in Piping

A video electromechanical probe has been designed to enter relatively large (7 to 8 inches) piping and tubing to visually inspect and measure offset and peaking of welds. Irregularity dimensions are recorded on peripheral equipment consisting of video tape and an X–Y plotter.

The probe was designed for inspection of vacuum-jacketed liquid lines that cannot be inspected externally. The visually controlled electromechanical probe enters the fuel line with a minimum of contamination to perform a profiling of the welds. The radial welds are located by a closed circuit TV system that uses a fixed camera located in the forward section of the probe and aligned with a scanning mirror that is rotatable through 360°. When a weld is sighted, the probe is moved into position and locked in place by a segmented shoe that is expanded by a pneumatically inflated bladder. A profile tracing tool is then extended to the surface of the weld and caused to rotate through 360°, its shaft's axial motion being translated into a signal whose amplitude variations represent the weld profile. The signal is recorded on an X–Y plotter and a video tape records the weld surface for visual examination and comparison with the X–Y plot.

Note:

Inquiries concerning this innovation may be directed to:

Technology Utilization Officer
Marshall Space Flight Center
Huntsville, Alabama 35812
Reference: B68-10149

Patent status:

No patent action is contemplated by NASA.

Source: J. Y. Cunningham, F. H. Burry, R. M. Heisman, L. B. Norwood, and W. F. Iceland of North American Aviation, Inc. under contract to Marshall Space Flight Center (MFS-14545)

Category 01

This document was prepared under the sponsorship of the National Aeronautics and Space Administration. Neither the United States Government nor any person acting on behalf of the United States Government assumes any liability resulting from the use of the information contained in this document, or warrants that such use will be free from privately owned rights.

NASA TECH BRIEF

NASA Tech Briefs are issued to summarize specific innovations derived from the U.S. space program, to encourage their commercial application. Copies are available to the public at 15 cents each from the Clearinghouse for Federal Scientific and Technical Information, Springfield, Virginia 22151.

Improved S/N Meter

Signal-to-noise ratios (S/N) can be read directly on a meter which incorporates a variable-frequency notch filter. This meter permits the measurement of noise plus interference in the presence of carrier or modulation signals. Conventional methods of measuring S/N generally distort the noise spectrum or remove intermodulation products which contribute to the effective noise plus interference.

The new S/N meter employs notch filter techniques to phase lock a loop to the desired signal component of the input spectrum and then shift the VCO output an additional 90 degrees to provide a signal component 180 degrees out of phase with the incoming signal component. If the amplitudes of the signals are made equal, the sum of the input spectrum and the reconstructed signal component is the input spectrum with the signal (or carrier) component notched out. The relationship between the signal amplitude and the residual noise is the signal-to-noise ratio.

The meter operates between a baseband signal of 400 Hz to 1.5 MHz or an i-f signal of 8 MHz to 55 MHz at the input of an attenuator, which is used to adjust the input signal (or carrier) component to a signal level of −50 dbm. The meter can be made to operate in either an i-f or a baseband mode by selection of the proper pushbutton on the front panel. A noise source and calibration signal source (1 MHz for baseband and 10 MHz for i-f) are included in the instrument for calibration purposes. Nulls in excess of 40 db of the signal component can be obtained.

Note:

Inquiries concerning this meter may be directed to:

Technology Utilization Officer
Manned Spacecraft Center
Houston, Texas 77058
Reference: B68-10151

Patent status:

Inquiries about obtaining rights for the commercial use of this invention may be made to NASA, Code GP, Washington, D.C. 20546.

Source: C. B. Windett
of Motorola Inc.
under contract to
Manned Spacecraft Center
(MSC-11656)

Category 01

This document was prepared under the sponsorship of the National Aeronautics and Space Administration. Neither the United States Government nor any person acting on behalf of the United States Government assumes any liability resulting from the use of the information contained in this document, or warrants that such use will be free from privately owned rights.

NASA TECH BRIEF

NASA Tech Briefs are issued to summarize specific innovations derived from the U.S. space program, to encourage their commercial application. Copies are available to the public at 15 cents each from the Clearinghouse for Federal Scientific and Technical Information, Springfield, Virginia 22151.

MM-Wave Power Meter Mount

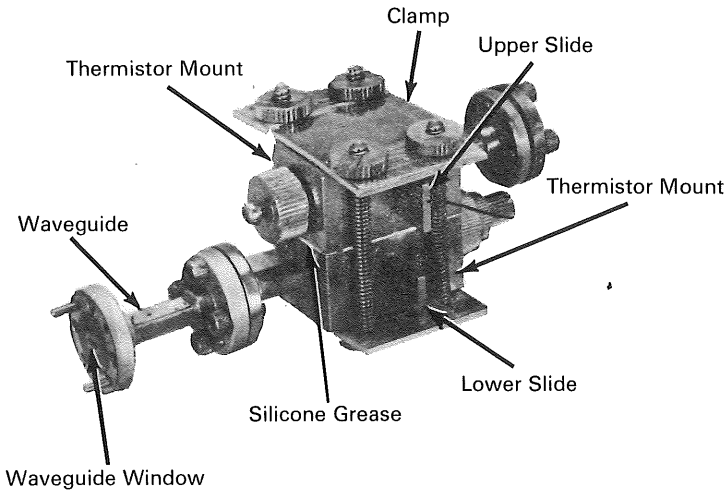

The problem:

In power measurement applications in the mm-wavelength region, commercially available mounts are not useful for precision measurements above a frequency of 40 GHz. Power measurements above this frequency can be performed by using a waveguide transition section to match an available R-band mount to the E-band flange but only with resultant poor sensitivity and narrow band performance. The E-band thermistor mounts that are commercially available consist of only one power detection thermistor and are too strongly affected by changes in mount temperature to make accurate measurements. In addition, these mounts are not electrically compatible with modern commercial power meters.

The solution:

An E-band thermistor mount for measuring RF power in the mm-wavelength (usually 3 mm) and a technique for adjusting a temperature compensating thermistor to provide an electrically balanced bridge. The mount is relatively insensitive to temperature effects that cause measurement errors in single ended circuits.

How it's done:

Two single commercially available thermistor mounts are thermally bonded together and wired electrically to adapt to a commercial power meter. A stainless steel waveguide section with waveguide window prevents convection currents, thus thermally isolating the power detection (left) thermistor mount. One thermistor is mounted in each slide, a temperature compensating thermistor in the upper slide and a power detection thermistor in the lower. The slides move laterally and are moved and set for maximum output on the power meter. The two thermistors form the input bridge circuit, with the detection thermistor resistance related to the magnitude of the power entering the waveguide.

(continued overleaf)

This document was prepared under the sponsorship of the National Aeronautics and Space Administration. Neither the United States Government nor any person acting on behalf of the United States Government assumes any liability resulting from the use of the information contained in this document, or warrants that such use will be free from privately owned rights.

A novel technique is used to provide a thermal path or heat leak to the temperature compensating thermistor required to balance the bridge. The upper slide is masked leaving a slit in front of the thermistor leads. A fine paint spray is then drawn through by a low vacuum applied to the opposite side and coats the longer thermistor lead to form the thermal path to the slide. The thermistor is alternately monitored under the microscope and with the power meter, between spray coats, until the bridge is within the normal operating range.

Notes:

1. Used in conjunction with a commercially available insertion loss test set, this mount extended its frequency range to 100 GHz.
2. Inquiries concerning this invention may be directed to:

   Technology Utilization Officer
   NASA Pasadena Office
   4800 Oak Grove Drive
   Pasadena, California 91103
   Reference: B68-10152

Patent status:

This invention is owned by NASA, and a patent application has been filed. Royalty-free, nonexclusive licenses for its commercial use will be granted by NASA. Inquiries concerning license rights should be made to NASA, Code GP, Washington, D.C. 20546.

Source: Charles T. Stelzried,
Donald L. Mullen, and Donald A. Oltmans
of Jet Propulsion Laboratory
(NPO-10348)

NASA TECH BRIEF

NASA Tech Briefs are issued to summarize specific innovations derived from the U.S. space program, to encourage their commercial application. Copies are available to the public at 15 cents each from the Clearinghouse for Federal Scientific and Technical Information, Springfield, Virginia 22151.

Hydra I Data Display System

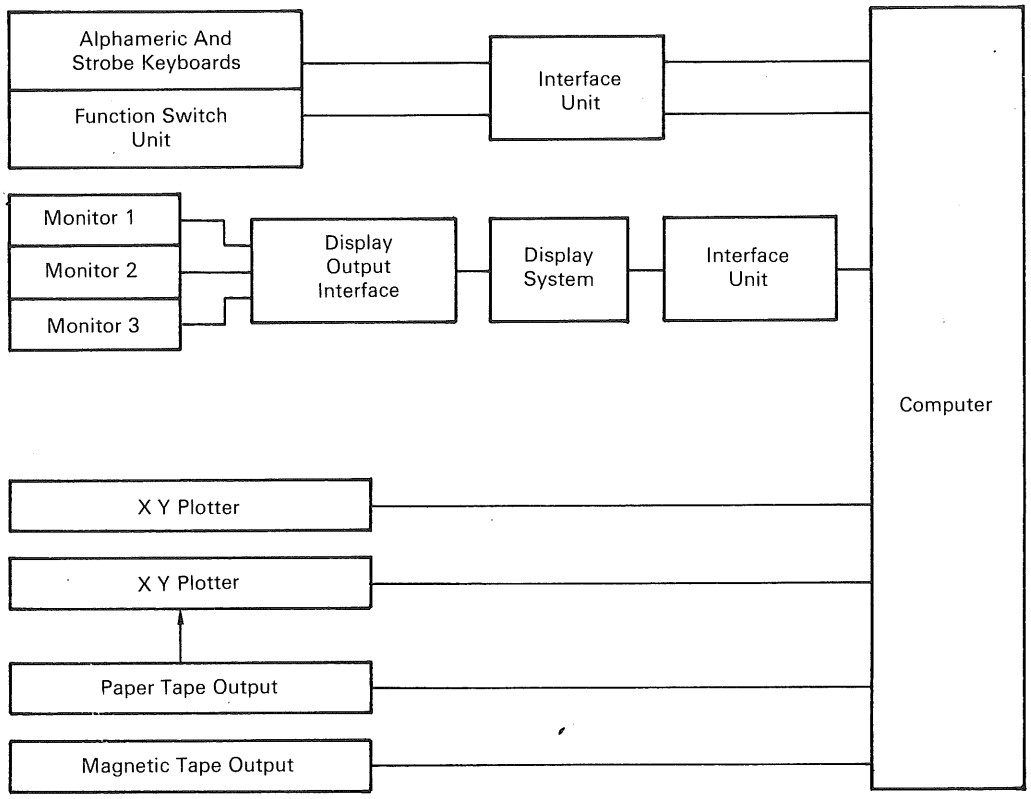

A system has been devised to generate charts, graphs, printed matter, etc. on slides or conventional negatives and positives, and combines these media with a capability of storage on magnetic tape for future updating to accommodate engineering changes or contract modifications to be readily added to basic data. The system has been named Hydra due to its self-generating feature reminiscent of the monster of Greek mythology.

The system operator develops displays on a video monitor screen, using an alphameric keyboard and a set of cursor (strobe) controls as input devices. Once a display is developed, it may be stored on magnetic tape and recalled at will for updating, review, or printout. Printout may be by either a teleprinter or X–Y plotter.

The system consists of four groups, input and control equipment, computer, display output, and copy

(continued overleaf)

This document was prepared under the sponsorship of the National Aeronautics and Space Administration. Neither the United States Government nor any person acting on behalf of the United States Government assumes any liability resulting from the use of the information contained in this document, or warrants that such use will be free from privately owned rights.

output. Input and control equipment includes alphameric and strobe control units and function switch unit. Characters, numerals, and symbols may be entered on the display monitor in either a typewriter mode (for straight copy work) or in a random mode (as in labeling pictorial displays). The strobes are used to position characters in the random mode and to draw lines by means of coordinates supplied by the 3 monitors. All information is routed to the computer, which processes it and transfers it to the display system. Following display, the data is again routed to the computer where it is transferred to either paper tape or magnetic tape or both.

Note:

Inquiries concerning this innovation may be directed to:

Technology Utilization Officer
Manned Spacecraft Center
Houston, Texas 77058
Reference: B68-10155

Patent status:

No patent action is contemplated by NASA.

Source: Robert L. Hodgkins and Don R. Osgood
(MSC-11594)

NASA TECH BRIEF

NASA Tech Briefs are issued to summarize specific innovations derived from the U.S. space program, to encourage their commercial application. Copies are available to the public at 15 cents each from the Clearinghouse for Federal Scientific and Technical Information, Springfield, Virginia 22151.

Precision Bolometer Bridge

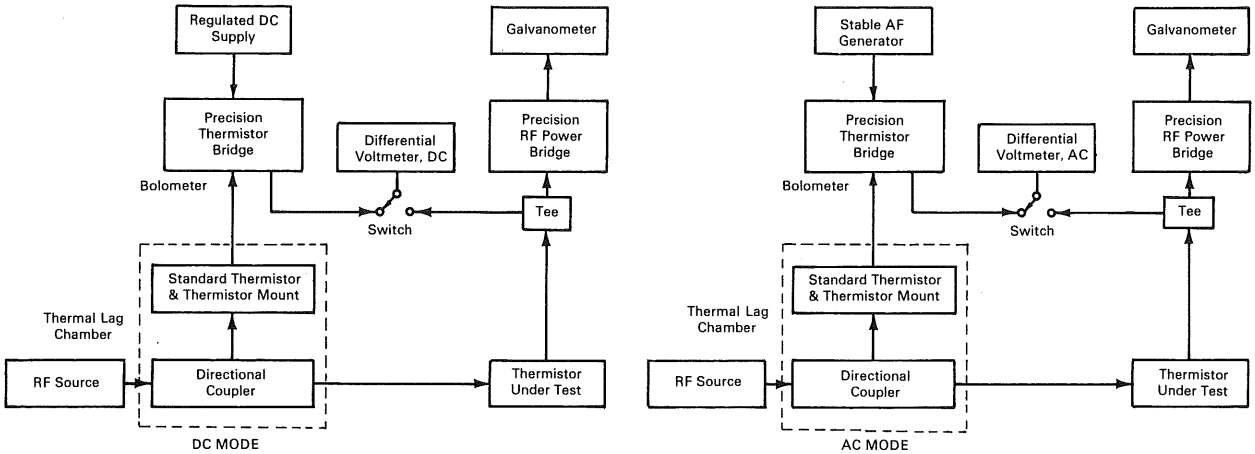

An economical, precision bolometer calibration bridge has been designed and constructed in prototype to offer several advantages over commercially available devices which are much more expensive. The bridge is a manually balanced type for dc bias and balance indication with either dc or ac power input. In each application (dc or ac) an external galvanometer is used with the bridge for null indication. Total dc through the bridge may be measured using an external milliammeter of high accuracy or by measuring the voltage across the bolometer with the milliammeter terminals shorted. This latter measurement requires a digital type voltmeter with an accuracy of better than $\pm 0.02\%$ + one digit, and having high input impedance.

On the ac side, the bridge is capable of measuring thin film bolometers by means of an audio frequency input from 10 KHz of 15 volts amplitude.

Notes:

1. This circuitry can monitor both voltage and current simultaneously without adapters in testing both 100 ohm and 200 ohm thin film bolometers.
2. Inquiries concerning this innovation may be directed to:

   Technology Utilization Officer
   Manned Spacecraft Center
   Houston, Texas 77058
   Reference: B68-10156

Patent status:

No patent action is contemplated by NASA.

Source: D. R. White
of North American Aviation, Inc.
under contract to
Manned Spacecraft Center
(MSC-11473)

Category 01

This document was prepared under the sponsorship of the National Aeronautics and Space Administration. Neither the United States Government nor any person acting on behalf of the United States Government assumes any liability resulting from the use of the information contained in this document, or warrants that such use will be free from privately owned rights.

NASA TECH BRIEF

NASA Tech Briefs are issued to summarize specific innovations derived from the U.S. space program, to encourage their commercial application. Copies are available to the public at 15 cents each from the Clearinghouse for Federal Scientific and Technical Information, Springfield, Virginia 22151.

Thermal Resistances of Solder-Boss/Potting Compound Combinations

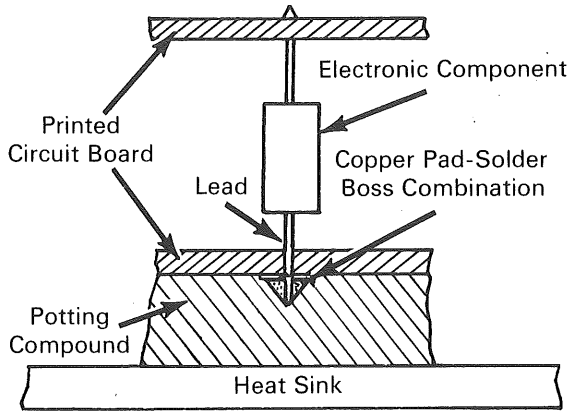

Formulas have been derived for calculating the thermal resistance of solder-boss/potting compound combinations, for different depths of a solder boss, in electronic cordwood modules. In such modules, electronic components are connected vertically between two printed circuit boards, and the complete assembly is attached to a heat sink, which conductively removes heat generated in the electronic components. Conduction of the electronically generated heat is through the component leads to the lower solder boss, and then through the potting compound to the heat sink. The rate of heat conduction to the heat sink is a function of the respective thermal resistances of the electronic component, the lead/solder-boss combination, and the potting compound. The thermal resistance of the electronic component may be determined empirically, and the thermal resistance of the lead/solder-boss combination in the module is negligible. The solder boss (plus copper pad) essentially acts as a buried heat source (hot spot) which may be at varying depths in the potting compound. Since the solder boss is the heat source for the potting compound, its shape and position will affect the thermal resistance of the surrounding potting compound. Tests using a number of potting compounds (consisting of resins thoroughly mixed with filler materials) have shown that this is the case. The derived formulas can be used as a design tool to calculate the thermal resistances of the combination for depths of the solder boss varying between 0.020 and 0.050 inch.

Note:

Complete details may be obtained from:

Technology Utilization Officer
Manned Spacecraft Center
Houston, Texas 77058
Reference: B68-10157

Patent status:

No patent action is contemplated by NASA.

Source: E. D. Veilleux
of Radio Corporation of America
under contract to
Manned Spacecraft Center
(MSC-12074)

Category 01

This document was prepared under the sponsorship of the National Aeronautics and Space Administration. Neither the United States Government nor any person acting on behalf of the United States Government assumes any liability resulting from the use of the information contained in this document, or warrants that such use will be free from privately owned rights.

NASA TECH BRIEF

NASA Tech Briefs are issued to summarize specific innovations derived from the U.S. space program, to encourage their commercial application. Copies are available to the public at 15 cents each from the Clearinghouse for Federal Scientific and Technical Information, Springfield, Virginia 22151.

Improved Process for Making Thin-Film Sodium Niobate Capacitors

Sodium niobate ($NaNbO_3$), a material of nominally high dielectric constant, has been used as a thin film dielectric in microelectronic capacitors. The films formed by conventional vapor deposition processes are generally amorphous, lack chemical and structural homogeneity, and are often contaminated with foreign metals from the vapor deposition apparatus. Such sodium niobate films have a lower dielectric constant and a higher dissipation factor than the sodium niobate films formed by a new process involving three conventional evaporation methods. These entail high vacuum, flash, and reactive evaporations.

In the new process, the sodium niobate film is formed from high purity sodium carbonate and metallic niobium. The heat source is a commercially available electron beam apparatus, incorporating a tungsten filament which is shielded to prevent the deposition of tungsten and its oxides. The copper hearth is lined with a sheet of niobium. The niobium evaporant together with sodium carbonate is placed on this hearth liner, which prevents alloying of the molten evaporant with copper or evaporation of the copper by the electron beam. The reaction occurring in the flash evaporation can be represented as follows:

(1) $Na_2CO_3 \rightarrow Na_2O + CO_2$

(2) $2Na_2O + O_2 \rightarrow 2Na_2O_2$

(3) $Nb + O_2 \rightarrow NbO_2$

(4) $Na_2O_2 + 2NbO_2 \rightarrow 2NaNbO_3$

The Na_2O formed (equation (1)) is deposited on the capacitor base electrode, and the CO_2 gas is pumped from the vacuum system. Oxygen present in the system combines with the Na_2O to form sodium peroxide (Na_2O_2) on the base electrode. The molten niobium is simultaneously evaporated from the hearth and is deposited on the base electrode where it is oxidized (by the residual oxygen in the system) to niobium oxide (NbO_2). The sodium peroxide then combines with the niobium oxide to form the sodium niobate film on the base electrode.

The reaction will more readily correspond to equation (4) if the evaporation is conducted by alternate depositions of sodium oxide and niobium. The process can be summarized in accordance with the following steps:

1. Vapor deposit base electrode metal using standard high vacuum techniques.
2. Increase residual pressure by introducing oxygen to the vacuum chamber, and maintain at 5×10^{-4} torr.
3. Deposit sodium oxide by flash evaporation of sodium carbonate from hot niobium slug. The temperature of the niobium is kept below the decomposition temperature of Na_2CO_3 and below the melting point of the metal. A temperature range of 900°–2000°C has been found usable.
4. Deposit niobium.
5. Alternate Steps 3 and 4 to obtain desired thickness.
6. Raise substrate temperature from approximately 350°C to 460°C and maintain oxygen pressure. One hour has been found adequate for stress relief, should the recrystallization be completed in air subsequent to this step. Four to five hours have been found satisfactory for a deposit thickness of approximately 10,000 angstroms. Oxygen pressure can also be increased, should this be desired.
7. Repeat Step 1 to form the counter electrode. A complete capacitor will have been formed if masks were used to define the geometry during deposition. Photolithographic techniques can be employed to form desired patterns by standard masking and chemical etching.

(continued overleaf)

This document was prepared under the sponsorship of the National Aeronautics and Space Administration. Neither the United States Government nor any person acting on behalf of the United States Government assumes any liability resulting from the use of the information contained in this document, or warrants that such use will be free from privately owned rights.

Notes:

1. Crystalline sodium niobate films can be formed on amorphous or crystalline materials.
2. High purity films are formed from relatively inexpensive, pure starting materials.
3. Stoichiometric chemical composition of the film is assured by control of substrate temperature and deposition time; the composition is virtually independent of deposition rates.
4. Inquiries concerning this process may be directed to:

   Technology Utilization Officer
   Manned Spacecraft Center
   Houston, Texas 77058
   Reference: B68-10163

Patent status:

This invention is owned by NASA and a patent application has been filed. Royalty-free, nonexclusive licenses for its commercial use will be granted by NASA. Inquiries concerning license rights should be made to NASA, Code GP, Washington, D.C. 20546.

Source: E. Z. Micka
of TRW Space Technology Laboratories
under contract to
Manned Spacecraft Center
(MSC-11231)

NASA TECH BRIEF

NASA Tech Briefs are issued to summarize specific innovations derived from the U.S. space program, to encourage their commercial application. Copies are available to the public at 15 cents each from the Clearinghouse for Federal Scientific and Technical Information, Springfield, Virginia 22151.

Silicon Surface Barrier Detectors Used for Liquid Hydrogen Density Measurement

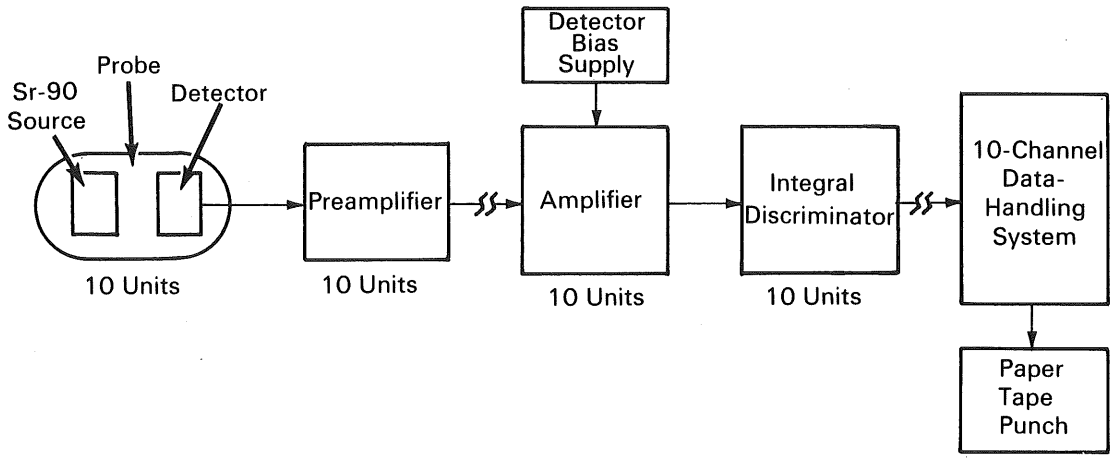

Cryogenic liquid fuels, such as liquid hydrogen, tend to become stratified in layers of different density as the result of temperature differences in storage tanks. Operational proportioning of a cryogenic liquid to spacecraft engines requires accurate means for measuring the local density of the liquid at various levels in a tank. Local density measurements must be made on small liquid samples at specific locations in the liquid. A multichannel system employing a radioisotope radiation source and a radiation detector came to be regarded, after considerable study, as offering the greatest potential for development into an effective densitometer for the measurement of local density in cryogenic liquids. The instrument was required to meet the following specifications:

1. Small size, light weight.
2. Fabrication from corrosion resistant metal.
3. Withstand up to 15 g mechanical shock, low-temperature thermal shock, and vibration.
4. Accuracy within 0.1% density.
5. Maintenance free, present no safety hazards.
6. Operate in temperatures ranging from 16° to 308°K.
7. Fabrication with a very thin, strong "window" capable of withstanding pressures from 3 atmospheres to 10^{-6} torr.
8. Vacuum-tight (helium leaktight) throughout its operational temperature range.

A prototype instrument that was constructed for measuring local densities in liquid hydrogen includes strontium-90 as the radiation source, an uncollimated source/detector geometry as the most efficient use of the source, and silicon surface barrier detectors in a 10-channel arrangement, as indicated in the block diagram. The instrument is composed of 10 identical channels of electronic equipment for collecting the density information, and a 10-channel data handling system for processing this information and punching

(continued overleaf)

This document was prepared under the sponsorship of the National Aeronautics and Space Administration. Neither the United States Government nor any person acting on behalf of the United States Government assumes any liability resulting from the use of the information contained in this document, or warrants that such use will be free from privately owned rights.

it on paper tape. This system (1) counts the number of beta particles per second incident on each detector with an energy greater than the discrimination level of the electronic equipment and (2) records the data on paper tape. These count rates are converted to densities by use of calibration curves (derived from pressure/temperature data in NBS Monograph 94). Each channel of the electronic system is composed of a source-detector probe. a charge sensitive preamplifier, a pulse shaping amplifier, an integral discriminator, and the data handling system. The charge sensitive preamplifier has a conversion gain of 150 mV/MeV. The noise resolution (silicon detector) is typically 18 keV at zero capacity with a noise slope of 0.10 keV/pF of input capacity. The output pulse is in the form of a step function with rise and fall times of approximately 100 nanoseconds and 180 microseconds, respectively. This pulse is fed into the pulse shaping amplifier, a delay line type whose gain can be varied from 12 to 85. The output of this amplifier is fed into the integral discriminator, and the output of the latter is fed to the data handling system. This system provides continuous monitoring on 10 data channels. The following data are punched on the paper tape:

1. Time elapsed from the beginning of the experiment
2. Channel identification
3. Number of counts in each channel

The tape can be fed into a computer to obtain a density-vs-time chart.

Notes:

1. Tests showed that the beta absorption method provides 0.1 percent accuracy in local density measurements of 100 percent liquid hydrogen or liquid oxygen in a 1-second counting period.
2. Due to the great difference between the densities of hydrogen vapor and liquid hydrogen, precise local density measurement of boiling liquid hydrogen (or other liquids) is virtually impossible.
3. Other applications in which a system of this type should prove valuable are: liquid hydrogen slush solid fraction measurements, cryogenic liquid level gages, and liquid hydrogen–hydrogen vapor quality meters.
4. Complete technical details may be obtained from:
   Technology Utilization Officer
   Marshall Space Flight Center
   Huntsville, Alabama 35812
   Reference: B68-10166

Patent status:

Inquiries about obtaining rights for the commercial use of this invention may be made to NASA, Code GP, Washington, D.C. 20546.

Source: D. T. James, J. K. Milam, and H. B. Winslett of Ortec Company under contract to Marshall Space Flight Center (MFS-14115)

NASA TECH BRIEF

NASA Tech Briefs are issued to summarize specific innovations derived from the U.S. space program, to encourage their commercial application. Copies are available to the public at 15 cents each from the Clearinghouse for Federal Scientific and Technical Information, Springfield, Virginia 22151.

Silicon Oxide Films Grown in Microwave Discharge

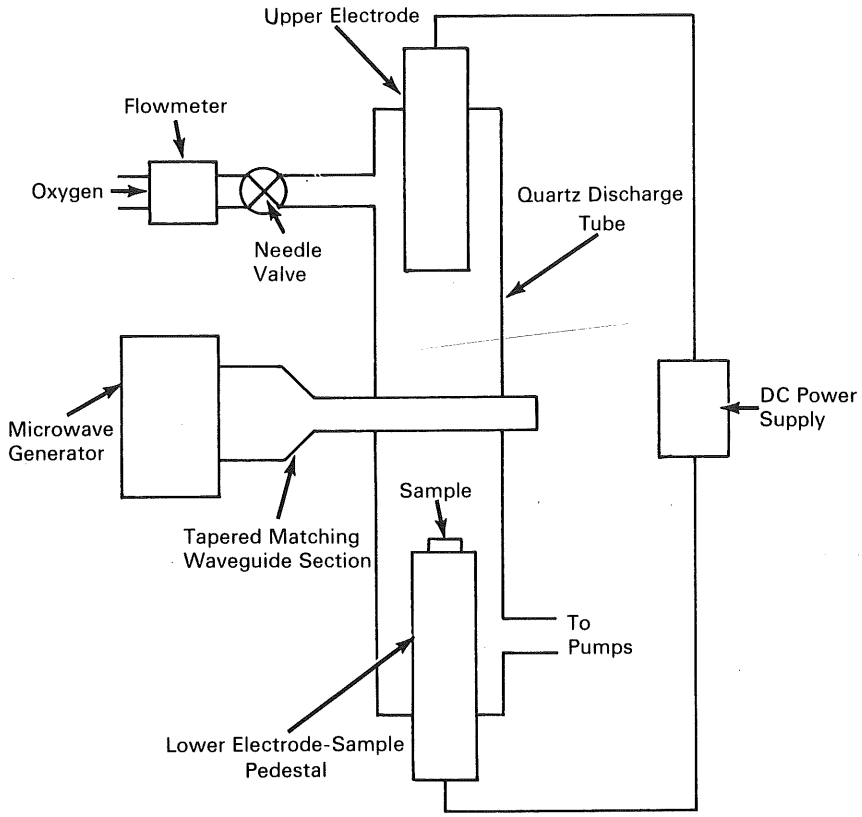

Silicon dioxide films are used for a variety of purposes in the fabrication of silicon devices. Very high quality oxides are produced by thermal oxidation of silicon substrates. The flaw-seeking processes that occur during oxide growth probably assist in achieving this high quality. However, in order to produce films thicker than 1000 Å in reasonably short periods of time, the oxidation had to be performed at high temperatures (1100°C). The high temperatures involved in this process are undesirable for a number of reasons; e.g., redistribution of prior diffusion fronts may occur; dislocation densities tend to increase; and lifetime may suffer.

Electrical discharges have been used to produce oxide films at lower temperatures. Oxidation in a dc discharge does not appear to offer much promise of achieving the moderately thick films required in many device applications. Recently it has been shown that in the denser plasma produced in a microwave discharge, films thicker than 1000 Å can be produced rapidly.

(continued overleaf)

This document was prepared under the sponsorship of the National Aeronautics and Space Administration. Neither the United States Government nor any person acting on behalf of the United States Government assumes any liability resulting from the use of the information contained in this document, or warrants that such use will be free from privately owned rights.

An investigation was therefore undertaken to characterize the growth behavior and the properties of the oxides obtained by this technique.

The results of the investigation show that the oxide growth can be characterized by a rate limiting diffusion process modified by sputtering effects produced by the discharge. The growth process provides a technique for rapidly oxidizing silicon at temperatures estimated to be 500°C or lower. At these low temperatures, growth rates corresponding to steam oxidization rates at 1100°C can be obtained. High quality oxides are produced by this process with properties which are for the most part indistinguishable from those of thermally grown oxides. MOS capacitance–voltage measurements indicate these oxides are essentially free of mobile ions.

The apparatus used to grow silicon oxide on a silicon substrate in a microwave discharge is shown in the figure. The quartz discharge tube had an 11-mm bore. A tapered matching waveguide section was used to couple power to the discharge tube from a 2.4-kMc/sec microwave generator with a power output variable between 500 and 1000 watts.

It has been previously shown that in dc discharges and microwave discharges the oxidation rate is enhanced if a positive dc potential is applied to the sample. Two electrodes were therefore inserted in the discharge tube for this purpose. The lower electrode acts both as the anode and the sample pedestal. The upper electrode in this system serves to complete the dc circuit; being cathodic it can also behave like a sputtering target. To prevent sputtered material from reaching the sample, the spacing between the electrodes was made large. At a pressure of 0.1 torr, the 20-cm spacing used between the two electrodes in this apparatus corresponds to a distance of about 200 mean free paths. Thus, material sputtered off the cathode should be scattered to the walls before reaching the sample.

The electrodes are a potential source of contamination. To minimize the problems from this source, silicon rods (9 mm in diameter) were used as the electrodes. Impurities driven from the walls of the discharge tube (resulting from bombardment of the walls by energetic species in the discharge) serve as another potential source of contamination. To minimize contamination from this source the apparatus was operated as a dynamic flow system, with oxygen being metered into the system through a needle valve.

In the dynamic system both the flow rate and pressure influence the discharge characteristics. Pressure measurements in this system were made at the outlet end of the discharge tube. Under conditions of constant outlet pressure, the pressure in the main body of the discharge tube increases with flow rate. The pressure in the main body of the discharge tube can be estimated from the appearance of the discharge. Under conditions of constant flow rate, outlet pressure, and microwave input power, the reproducibility achieved in overall system performance was the same under dynamic and static conditions.

In a typical experiment, a 6 × 6 mm square silicon wafer was placed on the sample pedestal and the system evacuated to the 10^{-6} to 10^{-7} torr range. Oxygen was metered into the system at 50 cc/min and the outlet pressure adjusted to 0.15 torr. With the microwave generator adjusted to deliver about 600 watts, the electrodeless microwave discharge produced a pale red oxygen plasma in the discharge tube. Under these conditions the volume of the plasma was sufficient to immerse the ends of both silicon rods (and the sample) in the plasma. The regions surrounding the ends of the silicon rods were characterized by an intense white glow. Oxide growth was observed on the sample and on both silicon rods.

At higher pressures the plasma became a deeper red; at lower pressures it gradually changed over to a bluish-white. At pressures below about 0.01 torr it was impossible to maintain a discharge in the tube. The volume occupied by the discharge increased as the pressure was reduced.

With other conditions constant, increasing the microwave input power increased the volume occupied by the discharge without significantly changing the appearance of the discharge. This result suggested that variation in the microwave power input did not produce significant changes in the plasma density, but only in its total volume.

The most significant effects produced by changes in the flow rate were ones that could be attributed to the accompanying changes in the pressure of the discharge. Sufficient experimental data is not available to predict the effects of flow rate under conditions in which the discharge pressure is held constant.

Note:

Inquiries concerning this investigation may be directed to:

Technology Utilization Officer
Marshall Space Flight Center
Huntsville, Alabama 35812
Reference: B68-10171

Patent status:

Inquiries about obtaining rights for the commercial use of this invention may be made to NASA, Code GP, Washington, D.C. 20546.

Source: J. Kraitchman
of Westinghouse Research Laboratories
under contract to
Marshall Space Flight Center
(MFS-14634)

AEC-NASA TECH BRIEF

AEC-NASA Tech Briefs describe innovations resulting from the research and development program of the U.S. AEC or from AEC-NASA interagency efforts. They are issued to encourage commercial application. Tech Briefs are published by NASA and may be purchased, at 15 cents each, from the Clearinghouse for Federal Scientific and Technical Information, Springfield, Virginia 22151.

Tunnel Diode Circuit Used as Nanosecond-Range Time Marker

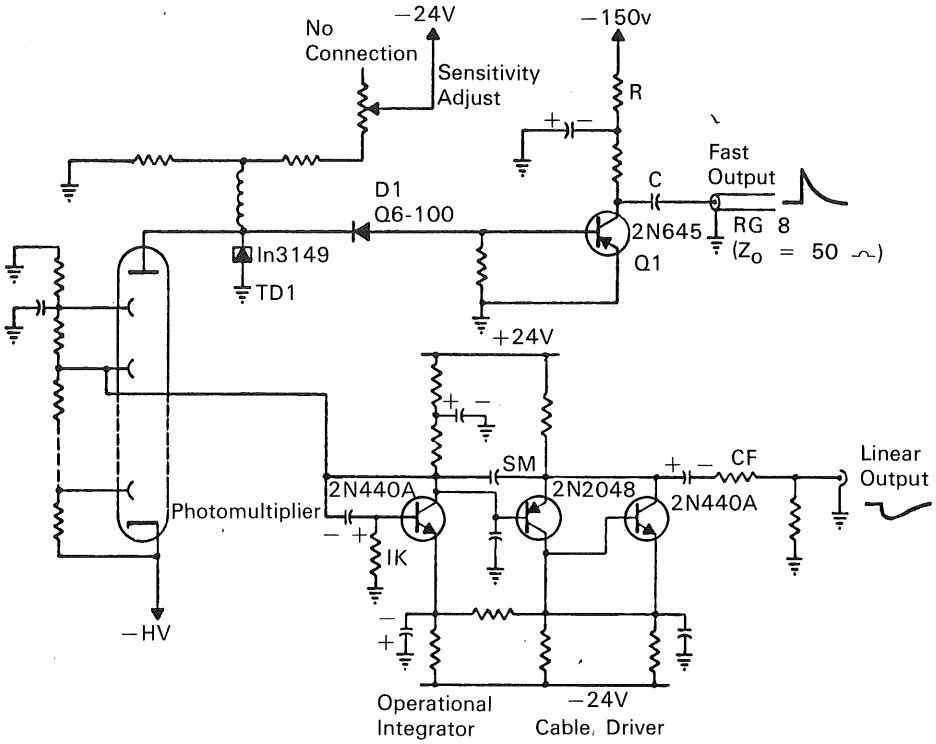

PREAMPLIFIER CIRCUIT WITH FAST OUTPUT (TOP) AND LINEAR OUTPUT (BOTTOM).

The problem:

To determine the time at which an event occurs in a scintillation crystal by the use of a relatively simple circuit. A commonly used method obtains this information by amplifying a partially integrated photomultiplier (PM) tube signal which triggers a voltage discriminator. The use of the voltage discriminator technique, however, results in timing uncertainties due to rise-time variations in the partially integrated PM output pulse applied to the discriminator threshold. Rise-time amplitude variations in the discriminator input signal produce a discriminator output pulse "walk" or "jitter". Other PM output pulse rise-time variations are caused by (1) the statistical production of photoelectrons at the PM cathode, and (2) by the time spread required for electron multiplication through the PM tube.

The solution:

A simple tunnel diode time marker circuit capable of triggering at voltages as low as the noise level of

(continued overleaf)

This document was prepared under the sponsorship of the Atomic Energy Commission and/or the National Aeronautics and Space Administration. Neither the United States Government nor any person acting on behalf of the United States Government assumes any liability resulting from the use of the information contained in this document, or warrants that the use of any information, apparatus, method, or process disclosed in this document may not infringe privately owned rights.

a 10-stage PM tube. The circuit marks the time-occurrence of the first few photoelectrons emitted from a PM-tube cathode, thus reducing the output-pulse timing uncertainty.

How it's done:

The unintegrated PM-tube anode current pulse triggers the tunnel diode (TD1) current discriminator, and provides a pulse of fixed amplitude and width. The TD1 output pulse is applied to transistor 01 operating in the avalanche mode through dc isolation diode D1. Under quiescent conditions, Q1 conducts approximately one-half the current necessary to cause an avalanche breakdown. When TD1 triggers, the Q1 collector potential drops in the avalanche mode from the quiescent value of 100 V to ground. The 100 V pulse is coupled to the output through C, a 20 pf capacitor. The capacitor and the low impedance of the line differentiate the pulse. The fast output pulse can thus be used as a fast timing signal produced simultaneously with the detection of the first few PM-tube photoelectrons.

Notes:

1. The differentiated output pulse amplitude is varied by varying the size of the coupling capacitor C.
2. Additional information is contained in *Nuclear Instruments and Methods,* vol. 32, p. 168–170, 1965.
3. Inquiries concerning this innovation may be directed to:

   Office of Industrial Cooperation
   Argonne National Laboratory
   9700 South Cass Avenue
   Argonne, Illinois 60439
   Reference: B68-10173

   Source: R. N. Larsen, Electronics Division, and E. B. Shear, Physics Division (ARG-90164)

Patent status:

Inquiries about obtaining rights for commercial use of this innovation may be made to:

Mr. George H. Lee, Chief
Chicago Patent Group
U.S. Atomic Energy Commission
Chicago Operations Office
9800 South Cass Avenue
Argonne, Illinois 60439

NASA TECH BRIEF

NASA Tech Briefs are issued to summarize specific innovations derived from the U.S. space program, to encourage their commercial application. Copies are available to the public at 15 cents each from the Clearinghouse for Federal Scientific and Technical Information, Springfield, Virginia 22151.

Capacitance-Coupled Wiper Increases Potentiometer Life

The inherent friction that exists between the sliding contact and the potentiometer element in conventional potentiometers limits their use to applications where friction is not critical. The sliding contactor produces wear and eventual failure of the potentiometer.

A capacitively-coupled wiper that does not contact the resistance element of the potentiometer and, hence, cannot introduce friction, provides a means of reducing the friction between a potentiometer element and its sliding contact. A small preamplifier may be employed close to the wiper to reduce errors caused by output cable capacitance. Experience with the device has shown it to be friction free with resultant low wear and also that it has high speed and high resolution.

The capacitance-coupled wiper moves close to but not in actual physical contact with the resistance element of the potentiometer. The electrical circuit is completed by electrostatic coupling across the gap between the resistance element and the contactor. The application of an alternating voltage to the resistance element of the potentiometer produces an electrostatically-coupled alternating voltage at the contactor which is correlated with the position of the contactor. The application of a direct unvarying voltage to the ends of the resistance element produces an electrostatically-coupled voltage at the contactor which varies only when the position of the contactor varies. Due to the small size of the equivalent series capacitance presented by the contactor, the loading of the output circuit is important and in many applications necessitates the use of special circuits to minimize the output current flow and the effects of cable capacitance. The capacitively-coupled wiper is extremely linear because it is designed to average the potential of several turns on the resistance wire. This minimizes the nonlinearities resulting from normal turn-to-turn winding irregularities.

Notes:

1. The lack of friction between the wiper and the resistance element results in a device having low wear, high speed, and high resolution. These characteristics suggest many applications in recording or control equipment utilizing potentiometers.
2. Complete details of operation of the capacitance coupled wiper are described in United States Patent No. 2,844,776, July 22, 1958.
3. A specific application of the capacitance-coupled wiper in a situation where the friction associated with conventional potentiometers would not have been acceptable is described in *A Pendulous Angle Sensor,* by John Dimeff and Albert G. Oswald, NASA TM X-1235, Ames Research Center, May 1966. This report is available from the Clearinghouse for Federal Scientific and Technical Information, Springfield, Virginia 22151; price $1.00.
4. In the application described in the above report, an ac servo-balanced bridge provides readout and, at the same time, readjusts the grounding point of the circuit so as to maintain the capacitive contactor at zero potential relative to the cable shield and instrument housing independent of the position of the wiper contact.
5. Inquiries concerning this invention may be directed to:

   Technology Utilization Officer
   Ames Research Center
   Moffett Field, California 94035
   Reference: B68-10175

(continued overleaf)

This document was prepared under the sponsorship of the National Aeronautics and Space Administration. Neither the United States Government nor any person acting on behalf of the United States Government assumes any liability resulting from the use of the information contained in this document, or warrants that such use will be free from privately owned rights.

Patent status:

This is the invention of a NASA employee, and U.S. Patent No. 2,844,776 has been issued to him. Inquiries about obtaining license rights for its commercial development should be addressed to the inventor, Mr. John Dimeff, at Ames Research Center, Moffett Field, California 94035.

Source: John Dimeff
(ARC-10060)

AEC-NASA TECH BRIEF

AEC-NASA Tech Briefs describe innovations resulting from the research and development program of the U.S. AEC or from AEC-NASA interagency efforts. They are issued to encourage commercial application. Tech Briefs are published by NASA and may be purchased, at 15 cents each, from the Clearinghouse for Federal Scientific and Technical Information, Springfield, Virginia 22151.

Steady-State Differential Calorimeter Measures Gamma Heating in Reactor

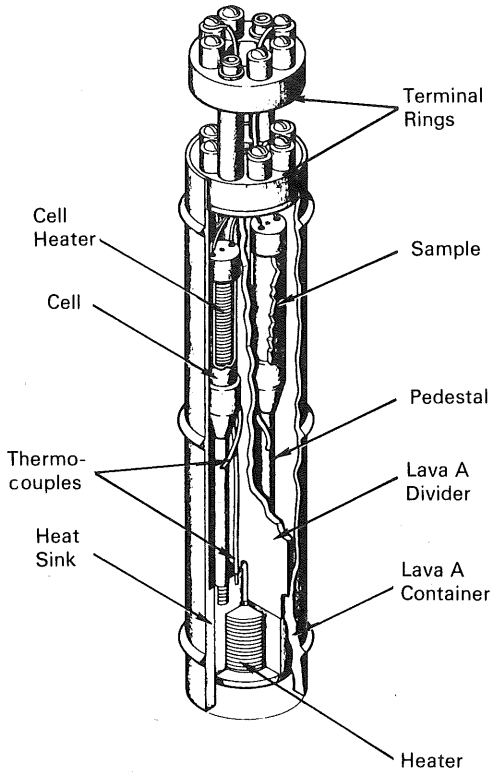

The problem:

To devise a method for measuring the gamma heat deposited in different samples in a research reactor. Information on the amount of heat generated in materials being irradiated in a reactor is of importance in the design of in-pile experiments.

The solution:

A steady-state differential calorimeter, which displays good accuracy and reproducibility of results, is used to measure gamma heating in a reactor environment. The instrument has demonstrated the ability to reproduce results with an accuracy of 2%. Such instruments have been constructed with measuring ranges of from 3 to 500 mW/g of sample using copper samples of approximately 4 g. The calorimeter has a long life expectancy since it is virtually unharmed by the reactor environment.

How it's done:

The calorimeter shown is 3.1 cm in diameter and 15.8 cm long. The instrument consists essentially of

(continued overleaf)

This document was prepared under the sponsorship of the Atomic Energy Commission and/or the National Aeronautics and Space Administration. Neither the United States Government nor any person acting on behalf of the United States Government assumes any liability resulting from the use of the information contained in this document, or warrants that the use of any information, apparatus, method, or process disclosed in this document may not infringe privately owned rights.

two aluminum sample cells with internal heaters mounted on aluminum pedestals. One cell is empty; the other holds a sample material. The pedestals are arranged symmetrically on a controlled-temperature heat sink, which is also made of aluminum and contains an internal heater. All the heaters are nichrome wire wound on cores made of an insulating material called lava A.

Thermocouples are attached to each pedestal and to the heat sink. The pedestal thermocouples are connected in electrical opposition, across a null detector, to indicate the temperature difference between the pedestals. The null meter has a sensitivity of 0.2 μV or 0.005°C per minor division. The heat sink thermocouple is used to indicate temperature.

The two pedestal units, insulated from each other by lava A, are placed in a lava A container. The container is designed so that only the bottom of the heat sink is left uninsulated. This allows a path for the internally generated heat to escape to the environment. Two terminal rings on the top of the container allow cable leads to be connected from the associated instrumentation. All connections from the calorimeter to the instrumentation are made with cable composed of copper conductors insulated with polyvinyl.

Specific quantities of electrical power are supplied to each cell to obtain a zero temperature difference between the pedestals in the absence of radiation. After this balance is obtained, the calorimeter is placed in a radiation field. The presence of the radiation causes heat to be deposited in the sample. This additional heat source in the sample cell disturbs the calorimeter balance. To compensate, the electrical power delivered to the sample-containing cell is reduced to reestablish balance. The gamma heating value is then obtained by using the measured electrical power delivered to each cell, in an equation derived from the analysis of a theoretical model of the calorimeter.

It is possible to calibrate the instrument so that it will operate in a horizontal position. Thus, it can be used to measure gamma heating in reactor beam holes as well as vertical facilities.

Notes:

1. Additional details are contained in *A Steady-State Differential Calorimeter Used to Measure Gamma Heating in a Reactor Environment,* by Dale A. Herbst and James H. Talboy, ANL-7178, March 1966, Argonne National Laboratory, Argonne, Illinois 60439. This report is available from the Clearinghouse for Federal Scientific and Technical Information, Springfield, Va. 22151; price $3.00 (microfiche copies, $0.65).
2. This information may be of interest to manufacturers of differential calorimeters and research laboratories using such equipment.
3. Inquiries concerning this innovation may be directed to:

   Office of Industrial Cooperation
   Argonne National Laboratory
   9700 South Cass Avenue
   Argonne, Illinois 60439
   Reference: B68-10182

Source: D. Herbst and J. H. Talboy
Reactor Operations Division
(ARG-10120)

Patent status:

Inquiries about obtaining rights for commercial use of this innovation may be made to:

Mr. George H. Lee, Chief
Chicago Patent Group
U.S. Atomic Energy Commission
Chicago Operations Office
9800 South Cass Avenue
Argonne, Illinois 60439

AEC-NASA TECH BRIEF

AEC-NASA Tech Briefs describe innovations resulting from the research and development program of the U.S. AEC or from AEC-NASA interagency efforts. They are issued to encourage commercial application. Tech Briefs are published by NASA and may be purchased, at 15 cents each, from the Clearinghouse for Federal Scientific and Technical Information, Springfield, Virginia 22151.

Concept for Sleeve Induction Motor with 1-msec Mechanical Time Constant

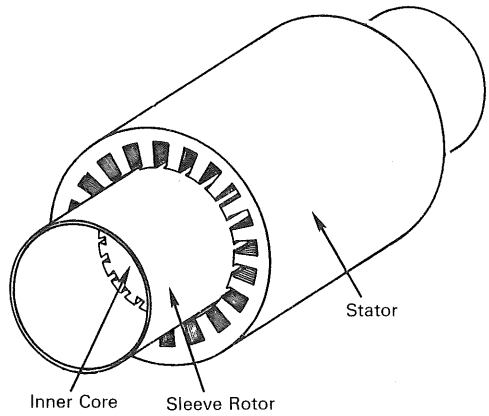

The problem:

To design a low-inertia induction motor that can be used with solid-state devices to control all-electric servo power systems. Previous methods used in various critical, high performance servo applications have required the use of complex electrohydraulic control systems. Other nonhydraulic control systems using power factor correction often produce current-buildup time delays much larger than one-fourth period, or 4.2 msec for a 60-Hz supply frequency.

The solution:

A conductive sleeve induction motor having a 1-msec mechanical time constant. The servomotor rotor inertia is small compared to the maximum force rating of the servo motion, permitting high no-load acceleration. Design optimization procedures allow minimization of the inherently-high reactive power requirement of the sleeve-type motor. Also, a control system which operates the motor under constant flux, varying frequency conditions is proposed as a means of eliminating the time delays associated with the field-energy buildup time of the usual fixed field-variable field control system.

How it's done:

The squirrel cage or solid iron rotor of the typical 2-phase servomotor is replaced with a thin sleeve of light metal revolving in the annular gap between the stationary outer and inner core members. Since low inertia in the sleeve motor can be obtained at the expense of real and reactive power requirements, a "best trade" design consideration between these quantities is made.

The apparent power rating, or rotor loss, is calculated for the rotating conductive sleeve mounted in the magnetic gap between the stator and a stationary internal cylindrical core. Distributed 2-phase windings applied to the stator produce an essentially sinusoidal field of p poles revolving at an angular speed of θ rad/sec. The maximum possible magnetic induction in the gap depends on a simple dimension ratio of the core laminations and the saturation induction of the core material. The ultimate in servo response requires that the motor operate near this maximum gap induction, in fact the mechanical time constant depends only upon the sleeve material, the operating induction, and a dimension ratio. After selecting the

(continued overleaf)

This document was prepared under the sponsorship of the Atomic Energy Commission and/or the National Aeronautics and Space Administration. Neither the United States Government nor any person acting on behalf of the United States Government assumes any liability resulting from the use of the information contained in this document, or warrants that the use of any information, apparatus, method, or process disclosed in this document may not infringe privately owned rights.

sleeve material, number of poles, operating frequency, sleeve thickness, effective gap spacing, and polar aspect ratio (core stack to pole pitch), a system of equations determines the major motor dimensions for a specified mechanical time constant and apparent power rating.

The reactive power for the gap is high because of the relatively large gap length necessitated by the sleeve thickness plus running clearance on both sides. The resulting lower power factor, or high Q, may lead to severe control amplifier problems. For this reason, the reactive power is also held close to the minimum possible value for the specified apparent power, mechanical time constant, and the selected design parameters.

The inherent low power factor, however, requires large control amplifiers, and, with the usual fixed-field, variable-field control system using power factor correction, current-buildup time delays occur in the controlled field.

To eliminate this time delay, a constant-flux, variable-frequency control technique is proposed. The field windings would be fed by a 2-phase, variable-frequency inverter. In this type control amplifier the frequency of the 2-phase output is made to vary in proportion to the input signal magnitude. Furthermore, the output voltage magnitude is made to vary in a manner which keeps the air gap flux in the motor constant. The result is a revolving field of constant strength and varying speed in the motor. In this way, the time delays usually associated with field-energy buildup are eliminated.

Notes:

1. This sleeve induction motor should be of interest to designers and users of electromechanical control systems.
2. Additional details are contained in *IEEE Transactions on Industry and General Applications,* vol. IGA-2, no. 2, p. 151–157, Mar.–Apr. 1966.
3. This device is in the conceptual stage only, and as of the date of publication of this Tech Brief, neither a model nor prototype has been constructed.
4. Inquiries concerning this innovation may be directed to:

   Office of Industrial Cooperation
   Argonne National Laboratory
   9700 South Cass Avenue
   Argonne, Illinois 60439
   Reference: B68-10185

Source: D. E. Wiegand
Reactor Engineering Division
(ARG-10124)

Patent status:

Inquiries about obtaining rights for commercial use of this innovation may be made to:

Mr. George H. Lee, Chief
Chicago Patent Group
U.S. Atomic Energy Commission
Chicago Operations Office
9800 South Cass Avenue
Argonne, Illinois 60439

NASA TECH BRIEF

NASA Tech Briefs are issued to summarize specific innovations derived from the U.S. space program, to encourage their commercial application. Copies are available to the public at 15 cents each from the Clearinghouse for Federal Scientific and Technical Information, Springfield, Virginia 22151.

Detection and Location of Metallic Objects Imbedded in Nonmetallic Structures

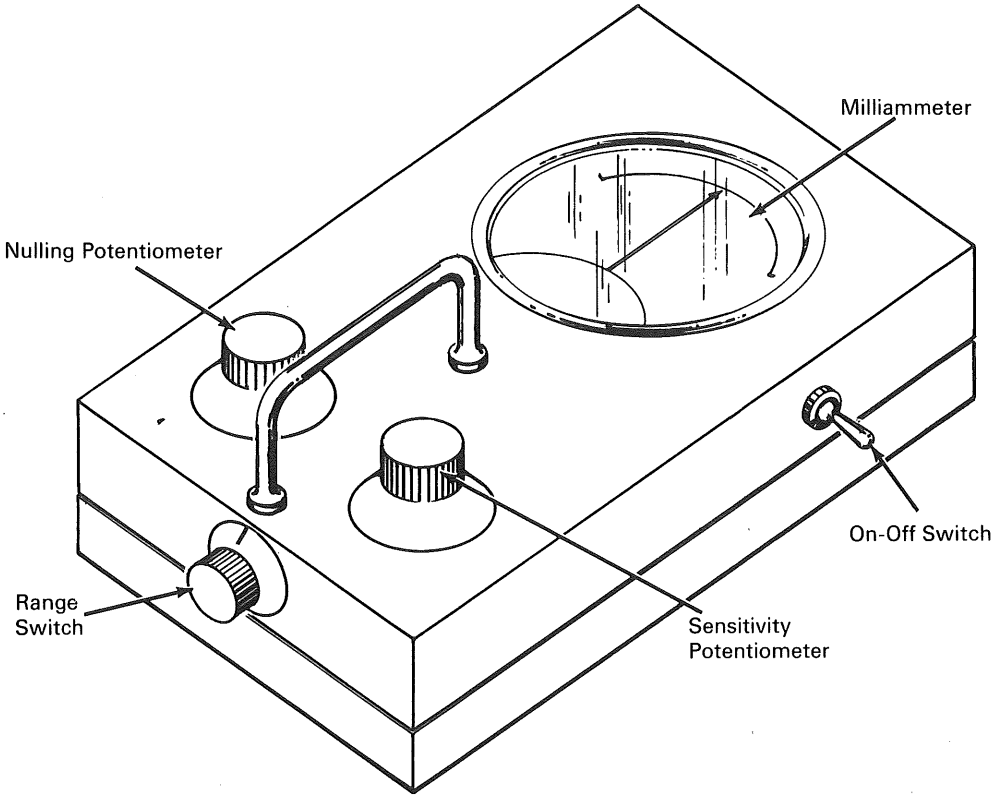

The problem:

To easily and reliably detect and locate metal objects imbedded in the nonmetallic walls, floors, or ceilings of a building or other structure. Present methods use bulky and heavy mine detectors which are not suitable in confined areas.

The solution:

The application of a small battery operated eddy current proximity measuring device that will detect metal objects the size of a dime at distances up to one foot within nonmetallic structural members. Such a device is based on the design of an eddy current proximity measuring device designed to nondestructively measure the thickness of spray-on foam insulation. This device weighs approximately two pounds, occupies approximately 60 cubic inches, and is battery powered.

(continued overleaf)

This document was prepared under the sponsorship of the National Aeronautics and Space Administration. Neither the United States Government nor any person acting on behalf of the United States Government assumes any liability resulting from the use of the information contained in this document, or warrants that such use will be free from privately owned rights.

How it's done:

A specially tuned oscillator loses power to the imbedded metal objects. The loss is proportional to the distance of the object from the instrument and its size. The signal output is amplified in an integrated amplifier, then fed into a milliammeter. In order to operate the instrument, it is held against, or close to, the surface and the switch is turned on. The device is then moved or aimed over the area to be searched. A deflection of the meter needle will indicate that the buried metal object is beneath the instrument; amount of deflecting pinpoints its location.

Note:

Inquiries concerning this invention may be directed to:

Technology Utilization Officer
Marshall Space Flight Center
Huntsville, Alabama 35812
Reference: B68-10183

Patent status:

Inquiries about obtaining rights for the commercial use of this invention may be made to NASA, Code GP, Washington, D.C. 20546.

Source: Robert L. Brown
and Robert W. Neuschaefer
(MFS-14790)

NASA TECH BRIEF

NASA Tech Briefs are issued to summarize specific innovations derived from the U.S. space program, to encourage their commercial application. Copies are available to the public at 15 cents each from the Clearinghouse for Federal Scientific and Technical Information, Springfield, Virginia 22151.

High- and Low-Pressure Pneumotachometers Measure Respiration Rates Accurately in Adverse Environments

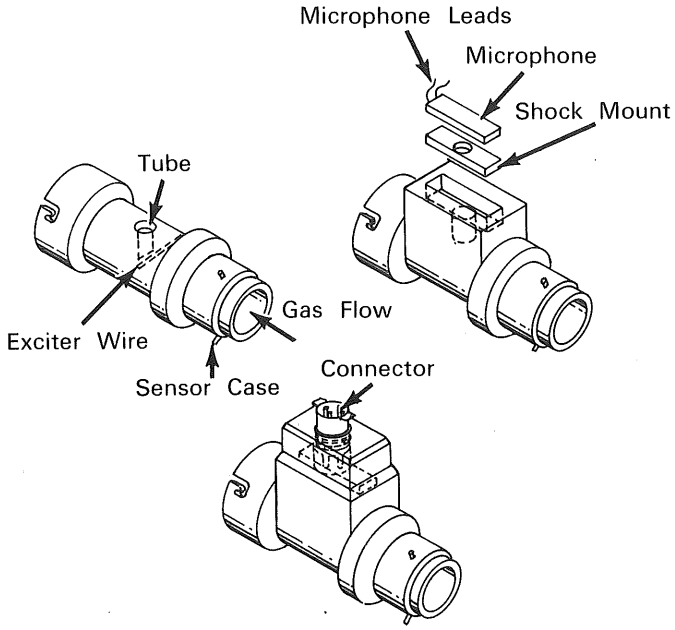

LOW PRESSURE PNEUMOTACHOMETER

The problem:

To medically monitor a subject, performing a variety of operations while piloting a high performance research aircraft, poses many problems since noise levels are high, vibration and acceleration levels are excessive, and the subject must be relatively active. For example, respiration rates, which provide valuable physiological function data, have been the subject of much research. Techniques used to date have been less than ideal since they suffer degradation from subject activity, noise and vibration, and thermal disturbances. They also impose power penalties on systems that are critically loaded to begin with.

The solution:

Respiration-rate transducers in the form of pneumotachometers that monitor either low pressure or high pressure oxygen systems. In each system the sensor is placed in series with the pilot's oxygen supply line to detect gas flow accompanying respiration.

How it's done:

In the low pressure application, a sensor case is fabricated with a coupling at each end to permit its insertion into the oxygen flow line. The body is machined to receive a small tube, shock mount, and subminiature ceramic microphone. The tube is in

(continued overleaf)

This document was prepared under the sponsorship of the National Aeronautics and Space Administration. Neither the United States Government nor any person acting on behalf of the United States Government assumes any liability resulting from the use of the information contained in this document, or warrants that such use will be free from privately owned rights.

intimate contact with the oxygen flow at one end and the ceramic microphone at the other, while the shock mount serves to isolate the microphone from aircraft vibration. An exciter wire is interposed between the entry port and exit port of the sensor case at a point between the entry port and microphone tube. When the subject inspires, oxygen encounters the exciter wire and turbulence is introduced into its flow as it passes the lower end of the microphone tube. This turbulence gives rise to an audio signal that is detected by the microphone and converted to a voltage proportional to signal amplitude. Microphone output is amplified and fed to an appropriate storage or readout medium.

Notes:

1. In the high pressure application, as illustrated below, when the subject inspires, oxygen passes through the inlet port, out through the escape hole into the sensor chamber, and exits through the outlet port to the subject's oxygen line. As oxygen leaves the escape hole it strikes the microphone diaphragm before exiting by the outlet port. The diaphragm is thus modulated by the passage of oxygen to produce a signal that is directly proportional to the subject's inspiration rate and amplitude.
2. Further information concerning this invention is presented in NASA TN D-4217, "Development of Respiration Rate Transducers for Aircraft Environments" by Robert T. McDonald and James Roman, October 1967, available from the Clearinghouse for Federal Scientific and Technical Information, Springfield, Virginia 22151; price $3.00. Inquiries may also be directed to:

   Technology Utilization Officer
   Flight Research Center
   Post Office Box 273
   Edwards, California 93523
   Reference: B68-10188

Patent status:

This invention is owned by NASA, and a patent application has been filed. Royalty-free, nonexclusive licenses for its commercial use will be granted by NASA. Inquiries concerning license rights should be made to NASA, Code GP, Washington, D.C. 20546.

Source: Robert T. McDonald and Robert J. Fagot
of Northrop Nortronics
and James A. Roman
of NASA Flight Research Center
(FRC-10012 & 10022)

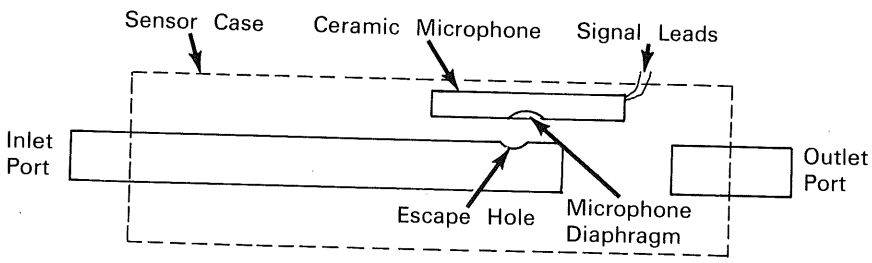

HIGH PRESSURE PNEUMOTACHOMETER

AEC-NASA TECH BRIEF

AEC-NASA Tech Briefs describe innovations resulting from the research and development program of the U.S. AEC or from AEC-NASA interagency efforts. They are issued to encourage commercial application. Tech Briefs are published by NASA and may be purchased, at 15 cents each, from the Clearinghouse for Federal Scientific and Technical Information, Springfield, Virginia 22151.

Fast-Response Cup Anemometer Features Cosine Response

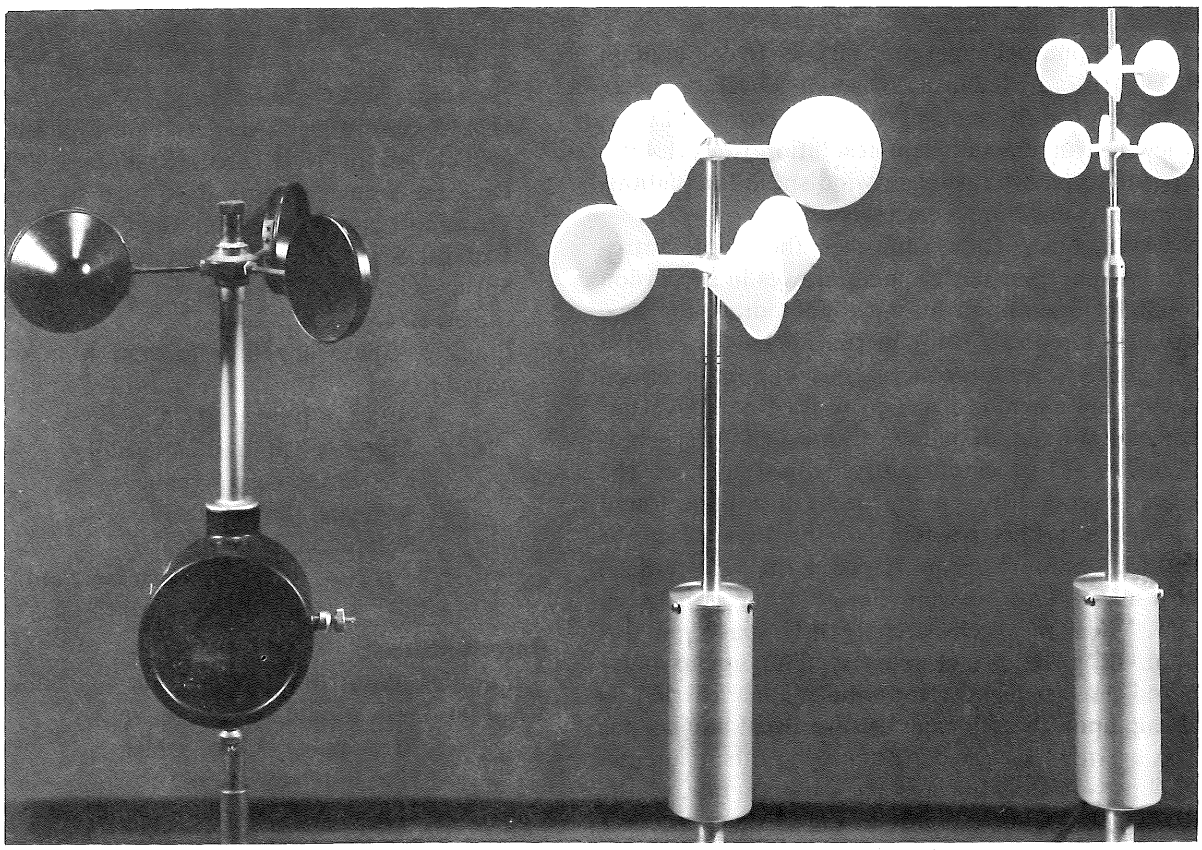

The problem:

To develop relatively simple equipment for the measurement of the true horizontal components of winds fluctuating rapidly in three dimensions. This information on the characteristics of natural turbulence is important to studies of the atmosphere's ability to disperse artificial pollutants and to exchange energy with the underlying surface. Resolution of winds into directed components ordinarily requires such devices as hot-wire anemometers or bidirectionally oriented propellers.

Prior to the development of the present design, anemometers based upon the familiar cup principle have not been suited to the task. These simple instruments cannot distinguish between horizontal and vertical flows with the precision required. Moreover, in fluctuating winds, standard cup anemometers commonly overestimate average speeds by 10 percent or more.

(continued overleaf)

This document was prepared under the sponsorship of the Atomic Energy Commission and/or the National Aeronautics and Space Administration. Neither the United States Government nor any person acting on behalf of the United States Government assumes any liability resulting from the use of the information contained in this document, or warrants that the use of any information, apparatus, method, or process disclosed in this document may not infringe privately owned rights.

The solution:

A six-cup, low-inertia anemometer that combines high resolution and fast response with a unique ability to sense only the horizontal component of the wind.

Cup rotors inherently accelerate more rapidly than they decelerate; consequently, cup instruments characteristically turn too fast in winds of fluctuating velocity. In the new design, this defect has been largely eliminated by: (a) maximizing the ratio between driving torque and rotor inertia; and (b) decreasing the difference between torques available to the rotor for acceleration and deceleration by increasing the drag coefficient of the reverse sides of the cups.

How it's done:

A 60-slot photochopper readout used in conjunction with cup rotors of unusually small wheel diameter that rotate proportionately faster in a given wind gives the new instrument sufficient resolution (only 1.4 cm per pulse) to record turbulent wind speed fluctuations as frequently as 10 times each second.

Six-cup construction smoothes the ripple introduced into the signal as each cup moves in succession through an orientation for maximum drag, the new instrument's reduced rotor inertia no longer being a sufficient flywheel to conceal this cup-pulse effect. The cups are assembled in two decks, one above the other and 60° out of phase, a so-called "staggered-six" array. Most importantly, adjustment of the vertical spacing between the decks has been found to afford a means whereby an instrument can be tuned for optimum cosine response ($u_h = \overline{V} \cos \phi$) over a useful range of wind elevation angles between $\pm$ 25°. When the decks are properly spaced in this fashion (the exact distance depending upon cup diameter and cup arm length), the wind-shading exerted by each cup upon the others in its own deck, and similar effects exerted by each deck upon the other, interact in such a way that the average rotation rate of the rotor essentially corresponds to the average speed of the horizontal component of the wind.

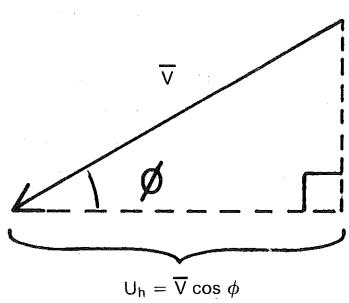

Notes:

1. Cup assemblies are fabricated of expanded polystyrene plastic. Cup arms are unusually short, the inner edge of each cup being located only one cup radius from the shaft.
2. A false shaft extension above the upper deck improves the symmetry of the instrument's response to flows on either side of horizontal.
3. An instrument of this design using cups 5.1 cm in diameter has a response length for acceleration of only 0.35 cm, corresponding to a response time of 0.1 sec in an average wind of 3.5 mps.
4. These instruments are being used to record horizontal wind fluctuation data from which turbulent energy spectra extending to frequencies as high as 2 or 3 Hz are routinely obtained.
5. The complete description of the instrument appears in *Modifications of Cup Anemometer Design to Improve the Measurement of Mean Horizontal Wind Speeds in Turbulence* by Paul Frenzen, which is included in ANL-7360, Radiological Physics Division Annual Report, July 1966 to June 1967. The report is available from the Clearinghouse for Federal Scientific and Technical Information, Springfield, Va. 22151; price: $3.00 (microfiche copies, $0.65).
7. Inquiries concerning this innovation may be directed to:

   Office of Industrial Cooperation
   Argonne National Laboratory
   9700 South Cass Avenue
   Argonne, Illinois 60439
   Reference: B68-10202

Source: Paul Frenzen
Radiological Physics Division
(ARG-90193)

Patent status:

Inquiries about obtaining rights for commercial use of this innovation may be made to:

Mr. George H. Lee, Chief
Chicago Patent Group
U.S. Atomic Energy Commission
Chicago Operations Office
9800 South Cass Avenue
Argonne, Illinois 60439

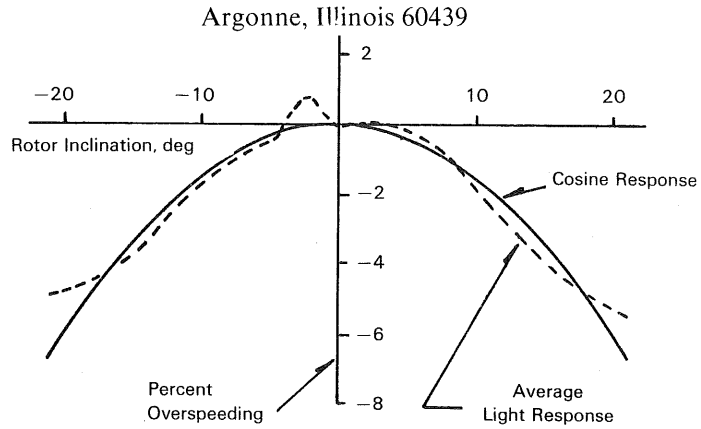

NASA TECH BRIEF

NASA Tech Briefs are issued to summarize specific innovations derived from the U.S. space program, to encourage their commercial application. Copies are available to the public at 15 cents each from the Clearinghouse for Federal Scientific and Technical Information, Springfield, Virginia 22151.

Electronic Load for Testing Power Generating Devices

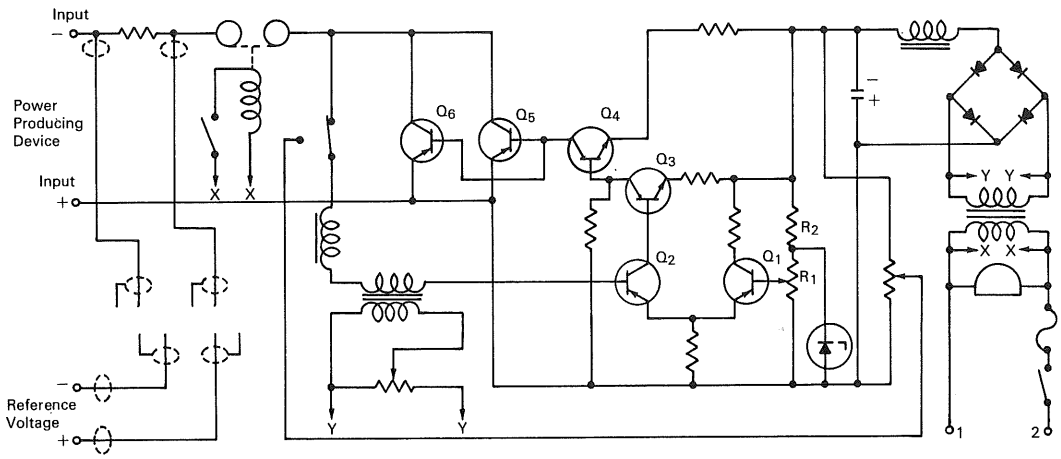

A test instrument has been devised for life test of various electric power generating devices such as thermionic energy conversion devices, thermoelectric generators, etc. The devices are connected to the input of the load and their outputs compared with a reference voltage. The load automatically adjusts until the voltage output of the power generating device matches the reference voltage. The load circuitry provides constant current or constant voltage loads as desired and may be operated to sweep between open circuit and saturation conditions at a 60 cps rate.

One embodiment of the load is illustrated and operates as described below.

The power producing device to be tested is connected across the power switching transistors Q_5 and Q_6 with the indicated polarities. The type and number of transistors (in parallel with Q_5 and Q_6) is determined by the power producing device to be tested. Q_4 drives the power switching transistors Q_5 and Q_6. Q_1 and Q_2 form a differential amplifier. A reference voltage that may be adjusted by R_1 will maintain a constant voltage across R_2.

In the constant voltage operation, the voltage of the power producing device is sensed across the switching transistor and compared at Q_2 to the reference voltage. If the voltage of the power producing device is higher than the selected reference voltage, Q_2 will drive Q_3 into conduction. This, in turn, will drive the drive transistor Q_4 until the voltage across the current switching transistors Q_5 and Q_6 approaches the selected reference voltage. Q_3 and Q_4 will provide sufficient drive to maintain this voltage at a constant level. Due to the high gains of the differential amplifier (Q_1 and Q_2) this arrangement will maintain a constant voltage across the input terminals over a wide range of currents.

In the constant current mode, the voltage sensing loop is disconnected from the input terminal and is switched across an adjustable voltage divider. A constant driving current can now be selected which will be maintained independent of the input voltage. To obtain a dynamic output performance of the device under test, the current switching transistor is alternately switched from open to saturation condition.

(continued overleaf)

This document was prepared under the sponsorship of the National Aeronautics and Space Administration. Neither the United States Government nor any person acting on behalf of the United States Government assumes any liability resulting from the use of the information contained in this document, or warrants that such use will be free from privately owned rights.

This is done at a 60 cps rate and the amplitude is adjusted by means of a potentiometer. A choke, placed in the base circuit of Q_2, prevents the load from oscillating.

Note:

Inquiries concerning this innovation may be directed to:

Technology Utilization Officer
NASA Pasadena Office
4800 Oak Grove Drive
Pasadena, California 91103
Reference: B68-10203

Patent status:

No patent action is contemplated by NASA.

Source: Gerhard Stapfer
and Evan B. Friedman
(NPO-10350)

NASA TECH BRIEF

NASA Tech Briefs are issued to summarize specific innovations derived from the U.S. space program, to encourage their commercial application. Copies are available to the public at 15 cents each from the Clearinghouse for Federal Scientific and Technical Information, Springfield, Virginia 22151.

Multilayer Plated Wire Shows Promise as Memory Device

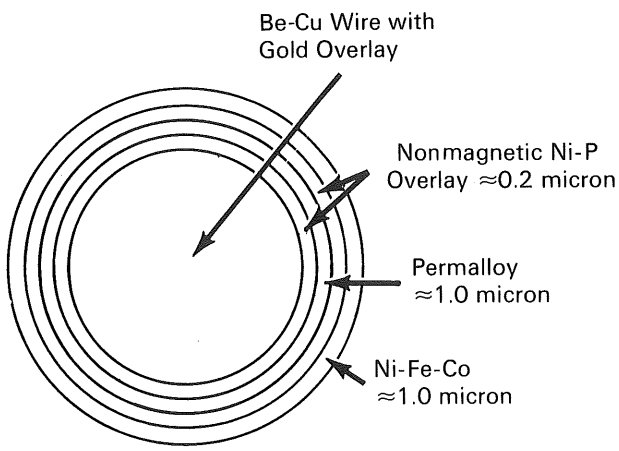

Advanced memory systems are needed in modern computer technology to keep abreast of constant improvements being made in electronic circuitry and packaging techniques. The plated wire memory in particular appears most attractive because of its high output compared to planar thin film memories and also because of its high speed and simplicity.

Basically, the device consists of 5 mil Be–Cu wire plated with an 81% Ni–19% Fe alloy about 1 micron thick crossed orthogonally by word lines. The distinguishing feature is the easy axis orientation along the circumference of the wire in a closed flux configuration. The resultant low demagnetization value in the remanent state permits relatively thick films to be used. Since the amplitude of the output is directly proportional to the volume of the material and thus to the thickness of the element, a relatively thick plated wire device is capable of outputs from 15 to 50 mv in the destructive mode and on the order of 3 to 10 mv in the nondestructive mode.

Operation of a plated wire device is similar to the operation of a single flat film in many respects. Application of a word current causes the magnetization vector to rotate toward the hard axis with the polarity of the output signal identifying the stored bit, and the central Be–Cu wire serving as the sense line. The closed flux configuration of the plated wire device enables its magnetization to be rotated to an angle smaller than 90°. Upon termination of the next read current, magnetization returns to the original state, thus providing a nondestructive readout.

Writing is by the driving of a small write current of appropriate polarity through the Be–Cu wire prior to terminating the "read" current, in a manner identical to the steering of flat films. Because the plated wire is capable of both writing and reading speeds in the submicrosecond region, it can be used with equal ease in scratch pad or program store applications.

A multilayer plated wire of cross section as illustrated has been used experimentally with promising

(continued overleaf)

This document was prepared under the sponsorship of the National Aeronautics and Space Administration. Neither the United States Government nor any person acting on behalf of the United States Government assumes any liability resulting from the use of the information contained in this document, or warrants that such use will be free from privately owned rights.

results. High-coercive force Fe–Co is plated over Ni–P preplate. An additional layer of Ni–P is plated and a low-coercive force Permalloy is plated over this Ni–P. The coercive force of the Fe–Co is designated by H_c and the low coercive force of the Permalloy by H_{cl} so that $H_c >> H_{cl}$. Bit information is written into the Fe–Co layer which acts as a steering mechanism for the Permalloy layer switching it into a "1" or "0". A low amplitude current pulse is applied, when reading information, which does not switch the Fe–Co layer (because of its high-coercive force) but does switch the low-coercive force Permalloy. The Permalloy is, therefore, always switched in the direction of the Fe–Co layer with Co acting as a keeper.

Notes:

1. This device appears superior to the conventional single layer permalloy-plated wire wherein, while operating in the nondestructive mode, the magnetization vector, by rotating through an angle approaching 90°, can destroy the written information.
2. Inquiries concerning this experimental investigation may be directed to:

   Technology Utilization Officer
   Manned Spacecraft Center
   Houston, Texas 77058
   Reference: B68-10205

Patent status:

Inquiries about obtaining rights for the commercial use of this invention may be made to NASA, Code GP, Washington, D.C. 20546.

Source: Donald Kadish
of Massachusetts Institute of Technology
under contract to
Manned Spacecraft Center

(MSC-11587)

NASA TECH BRIEF

NASA Tech Briefs are issued to summarize specific innovations derived from the U.S. space program, to encourage their commercial application. Copies are available to the public at 15 cents each from the Clearinghouse for Federal Scientific and Technical Information, Springfield, Virginia 22151.

Facsimile Video Enhancement Device

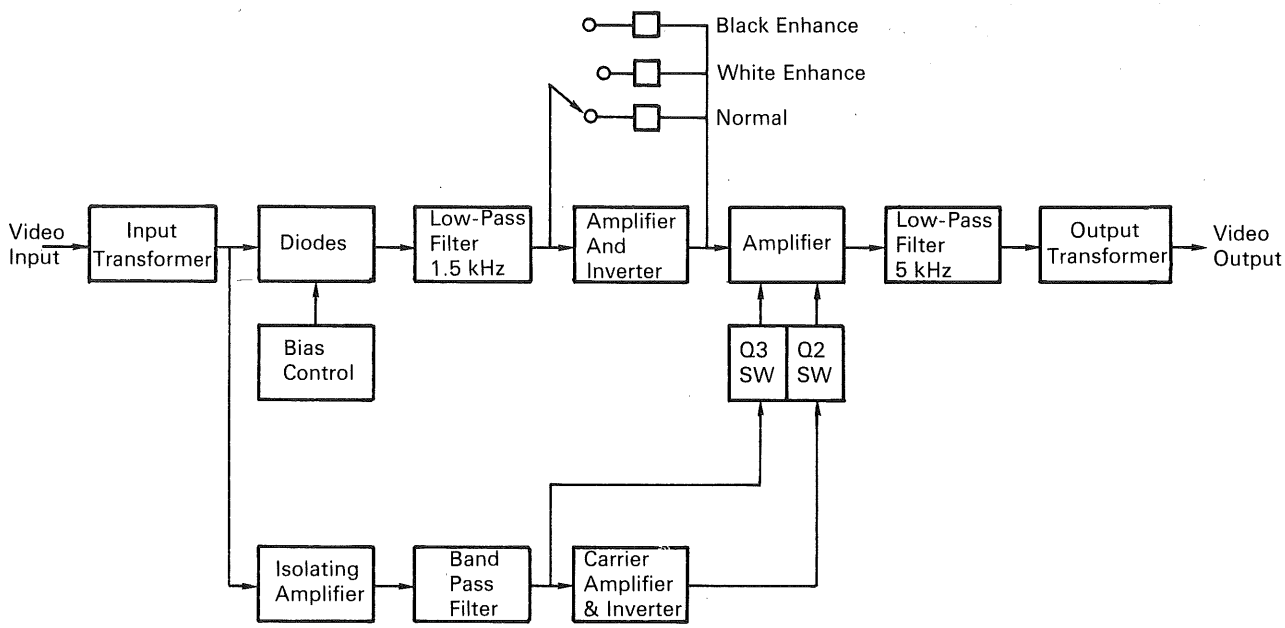

The APT (automatic picture transmission) system on some current weather satellites is similar to domestic television operation except for picture transmission which is in 240 rpm facsimile format. Similar facsimile systems are also used by commercial wire services. In the case of the satellites' APT system, the video signal is amplitude-modulated on a 2400 Hz subcarrier. This subcarrier, containing the picture, is then transmitted to the ground via the VHF transmitter. In a malfunctioning APT system, the modulation shifts from the design limits and the receiving facsimile, being unable to compensate for this shift, cannot present pictures suitable for meteorological evaluation.

To overcome this condition, a device called a video remodulation unit has been fabricated to demodulate the signal and then remodulate it, using the same carrier. By using the unit controls, modulation can be set to levels that compensate for picture in-transit degradation.

The unit corrects for the black shift observed on the modulated waveform as transmitted. Provision for selecting a nonlinear transfer function enables the user to enhance the white or black areas. There are 4 modes of operation. In the first mode, the internal circuitry is bypassed and the input signal is connected directly to the output connector. The second is a

(continued overleaf)

This document was prepared under the sponsorship of the National Aeronautics and Space Administration. Neither the United States Government nor any person acting on behalf of the United States Government assumes any liability resulting from the use of the information contained in this document, or warrants that such use will be free from privately owned rights.

linear operating mode in which the unit demodulates the input amplitude-modulated video waveform and resets the black level of the envelope waveform. The resultant waveform is amplified, its contrast levels reset and it is then applied to a modulation circuit that remodulates the waveform with the original 2400 Hz carrier frequency detected from the input waveform. The third and fourth modes operate essentially the same as the second mode, with the exception of nonlinear networks. These are switched into the feedback of the operational amplifier, which then amplifies the rebiased envelope waveform. The third mode enhances the black area of the picture, and the fourth the white area. Enhancing one area reduces contrast in the other.

Notes:

1. While this unit has been designed to enhance facsimile transmission using a 2400 Hz carrier, with modification it will improve degraded pictures on any standard facsimile carrier.
2. Inquiries concerning this invention may be directed to:

   Technology Utilization Officer
   Goddard Space Flight Center
   Greenbelt, Maryland 20771
   Reference: B68-10207

Patent status:

This invention is owned by NASA, and a patent application has been filed. Royalty-free, nonexclusive licenses for its commercial use will be granted by NASA. Inquiries concerning license rights should be made to NASA, Code GP, Washington, D.C. 20546.

Source: C. H. Vermillion
(GSC-10185)

NASA TECH BRIEF

NASA Tech Briefs are issued to summarize specific innovations derived from the U.S. space program, to encourage their commercial application. Copies are available to the public at 15 cents each from the Clearinghouse for Federal Scientific and Technical Information, Springfield, Virginia 22151.

Active RC Networks of Low Sensitivity for Integrated Circuit Transfer Function Synthesis

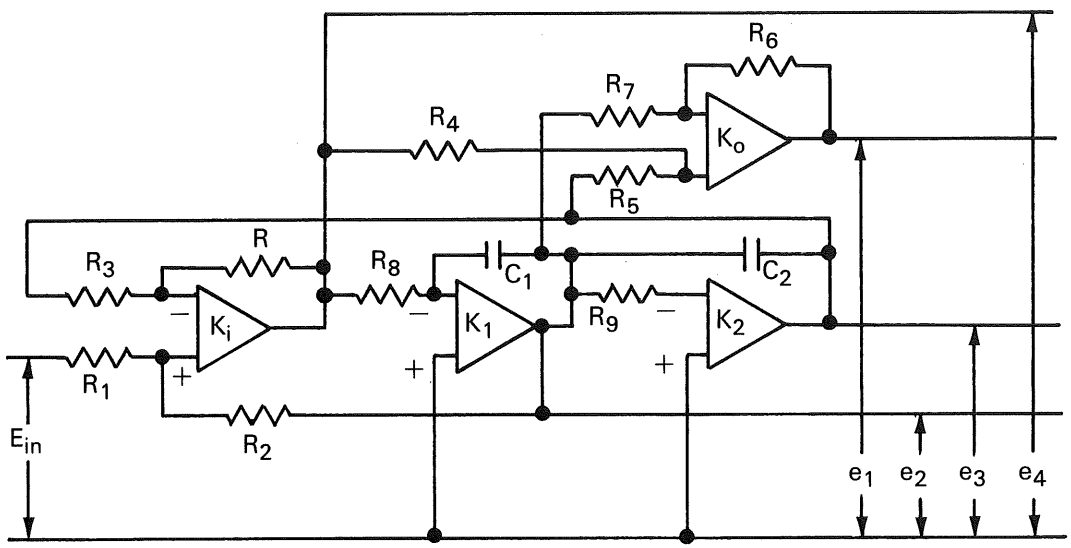

The lack of suitable inductive components for integrated circuit construction requires that other techniques be developed. Most methods of active RC filter synthesis are unsuited to high Q performance due to the extreme system sensitivity to change in the passive or the active components.

The network configuration shown is capable of extremely high Q performance with exceptional stability (insensitivity). In addition, the zeros and poles are independently adjustable. (The zeros may be located anywhere in the complex frequency plane and the poles anywhere in the left half-plane.) This network produces 2 poles and 2 finite zeros that can be arranged to produce a second order low pass, high pass, or bandpass function as desired. In addition, all functions are available simultaneously. Higher order functions are obtained by direct cascade connection of these building blocks. The frequency of maximum response and the Q are adjustable using a single resistor, R for frequency adjustment, then a second resistor R_2 for Q adjustment.

The circuit consists of two integrators and two summers that are interconnected to produce a complete second-order numerator and a second-order denominator.

Calculation and experiment show that the system is extremely insensitive to changes in both the active and passive components.

To place the zeros in the right half-plane, the signal from the first integrator, K_1, is inverted. The output

(continued overleaf)

This document was prepared under the sponsorship of the National Aeronautics and Space Administration. Neither the United States Government nor any person acting on behalf of the United States Government assumes any liability resulting from the use of the information contained in this document, or warrants that such use will be free from privately owned rights.

summer K_o, can then be eliminated as all inputs to it have the same polarity; however, it is convenient to use the output summer for isolation.

The sum of the sensitivities to the first four resistors, R, R_1, R_2, R_3 is *zero,* and all sensitivities are independent of Q. The sensitivity to changes in R_8 and C_1 will be zero if the R_8C_1 product remains fixed, as will the frequency sensitivity. In addition, the frequency sensitivity to R_9 and C_2 will be zero if the R_9C_2 product is held constant.

Note:

Complete details of this circuit are contained in: *State-Variable Synthesis for Insensitive Integrated Circuit Transfer Functions,* by W. J. Kerwin, L. P. Huelsman, and R. W. Newcomb, Solid State Circuits Journal of the IEEE, September 1967. Copies of this article are available from:

Technology Utilization Officer
Ames Research Center
Moffett Field, California 94035
Reference: B68-10210

Patent status:

No patent action is contemplated by NASA.

Source: W. J. Kerwin, L. P. Huelsman, and R. W. Newcomb
(ARC-10146)

NASA TECH BRIEF

NASA Tech Briefs are issued to summarize specific innovations derived from the U.S. space program, to encourage their commercial application. Copies are available to the public at 15 cents each from the Clearinghouse for Federal Scientific and Technical Information, Springfield, Virginia 22151.

Technique Increases Storage Capacity in Camera Tube Target

An investigation has been made in the development of techniques for increasing the signal current, where direct beam readout is used, in secondary electron conduction (SEC) camera tubes. Increasing the storage capacity and therefore the dynamic range of the SEC target permits satisfactory operation at reduced frame rates.

A large signal-to-noise ratio is required at the output of any camera tube to permit the presentation of high resolution images of pleasing quality. In SEC camera tubes, where direct beam readout is used, high signal-to-noise ratios are obtained when the signal current is large compared to the equivalent rms noise current of the preamplifier. The maximum signal current available from an SEC camera tube with a 1-inch diameter target results in a signal-to-noise ratio that is adequate for many applications. However, the signal current that can be generated with an SEC target of a given storage capacity per unit area is proportional to the frame rate and the raster area. Thus, in tubes with a small target operated at low frame rates, it is difficult to obtain a satisfactory maximum signal-to-noise ratio and hence an adequate dynamic range (the ratio of the weakest and the strongest illumination that can be presented in the same image without changing the operating parameters of the tube).

During the initial development of the SEC camera tube, 1-inch diameter targets were used to provide standard resolution performance (600 TV lines/picture height) at 30 frames/second, but recently there has been a growing interest in a wider range of operating conditions. Attention has been focused on (a) increased resolution with the 1-inch targets at 30 frames/second and (b) the development of camera tubes with 0.625-inch diameter targets operating at extremely low rates. Both these trends require increased signal current in order to maintain or increase the signal-to-noise ratio.

A report has been written to describe how far the desired increase in signal current has been achieved by using an SEC target with a large storage capacity per unit area.

Notes:

1. The storage capacity and therefore the dynamic range of the SEC target has been considerably improved. With the high capacity target, an SEC camera tube could be operated at frame rates as low as 0.625 frames/second, as far as known, for the first time. The small signal gain seems to be approximately as good as the gain of the low capacity target. A disadvantage of the high capacity target, however, is its limited storage time which restricts the high capacity target to applications using the continuous scanning operation only.
2. Inquiries concerning the above-mentioned report may be directed to:

   Technology Utilization Officer
   Manned Spacecraft Center
   Houston, Texas 77058
   Reference: B68-10213

Patent status:

No patent action is contemplated by NASA.

Source: H. R. de Vries and K. F. Boll
of Westinghouse Electric Corporation
under contract to
Manned Spacecraft Center
(MSC-11599)
Category 01

This document was prepared under the sponsorship of the National Aeronautics and Space Administration. Neither the United States Government nor any person acting on behalf of the United States Government assumes any liability resulting from the use of the information contained in this document, or warrants that such use will be free from privately owned rights.

NASA TECH BRIEF

NASA Tech Briefs are issued to summarize specific innovations derived from the U.S. space program, to encourage their commercial application. Copies are available to the public at 15 cents each from the Clearinghouse for Federal Scientific and Technical Information, Springfield, Virginia 22151.

Zinc–Oxygen Primary Cell Yields High Energy Density

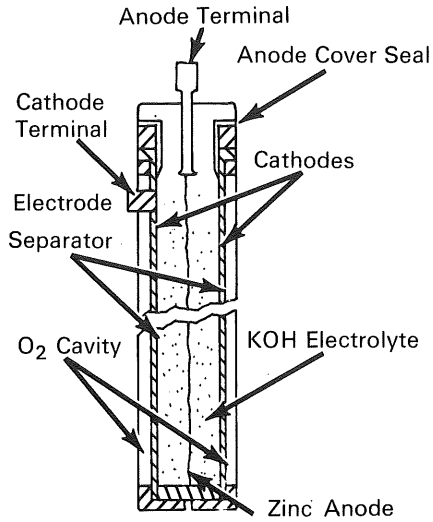

A zinc–oxygen primary cell has been developed to meet requirements for a reliable high-energy density battery for service as an auxiliary power source in space vehicle systems. The cell yields energy densities considerably in excess of conventional primary cells. For example, in a discharge time of 8 hours this cell yields an energy density of 120 watt-hours per pound of cell weight compared to 75 watt-hours per pound for a silver–zinc alkaline cell.

The zinc–oxygen cell (of square bi-cell construction to maximize zinc area per unit weight) incorporates two cathodes consisting of stable, efficient semi-permeable films. These film cathodes permit oxygen to pass through to the catalyst side to be reduced, yet retain the alkaline electrolyte (KOH) within the cell. The two cathodes, connected in parallel, are supported by a frame. The anode, made of porous zinc, is wrapped in separator material and inserted into the frame between the two cathodes. Intimate contact between the anode, separator, and cathode is achieved by proper cell support and stacking. The electrolyte, which provides a continuous ionic path, is used in an amount just sufficient to saturate the anode structure and separator material.

The oxidation–reduction reactions that occur in the cell during electrical power withdrawal may be represented as follows:

$$\text{Anode: } Zn + 4OH^- \rightarrow ZnO_2^{2-} + 2H_2O + 2e^-$$
$$\text{Cathode: } 1/2\ O_2 + H_2O + 2e^- \rightarrow 2OH^-$$
$$\text{Cell: } Zn + 1/2\ O_2 \rightarrow ZnO$$

The zinc is oxidized at the anode, as electrons are released to the external circuit. These electrons pass through the external circuit to the cathode where they take part in the reduction of oxygen to hydroxyl ions. The net cell reaction results in oxidation of zinc and reduction of oxygen to form zinc oxide. Overall cell potential is 1.617 volts.

(continued overleaf)

This document was prepared under the sponsorship of the National Aeronautics and Space Administration. Neither the United States Government nor any person acting on behalf of the United States Government assumes any liability resulting from the use of the information contained in this document, or warrants that such use will be free from privately owned rights.

Analytical studies were made to establish the optimum number of cells and stacking configurations in batteries required to yield the maximum energy density and overall system reliability. The results of these studies show that maximum energy densities occur when the batteries are designed to operate at current densities of 30 mA/cm^2. Maximum reliability and minimum battery weight would be achieved using a stacking configuration of 23 series-connected modules with 6 parallel-connected cells per module. A total of 138 series/parallel-connected cells will be required for a 28-volt, 400 A-hr battery system.

Note:

Inquiries concerning these cells may be directed to:

Technology Utilization Officer
Marshall Space Flight Center
Huntsville, Alabama 35812
Reference: B68-10218

Patent status:

No patent action is contemplated by NASA.

Source: Stewart Chodash
of Leesona Moos Laboratory
under contract to
Marshall Space Flight Center
and C. B. Graff
of Marshall Space Flight Center
(MFS-14661)

NASA TECH BRIEF

NASA Tech Briefs are issued to summarize specific innovations derived from the U.S. space program, to encourage their commercial application. Copies are available to the public at 15 cents each from the Clearinghouse for Federal Scientific and Technical Information, Springfield, Virginia 22151.

New Electrical Impedance Plethysmograph Monitors Cardiac Output

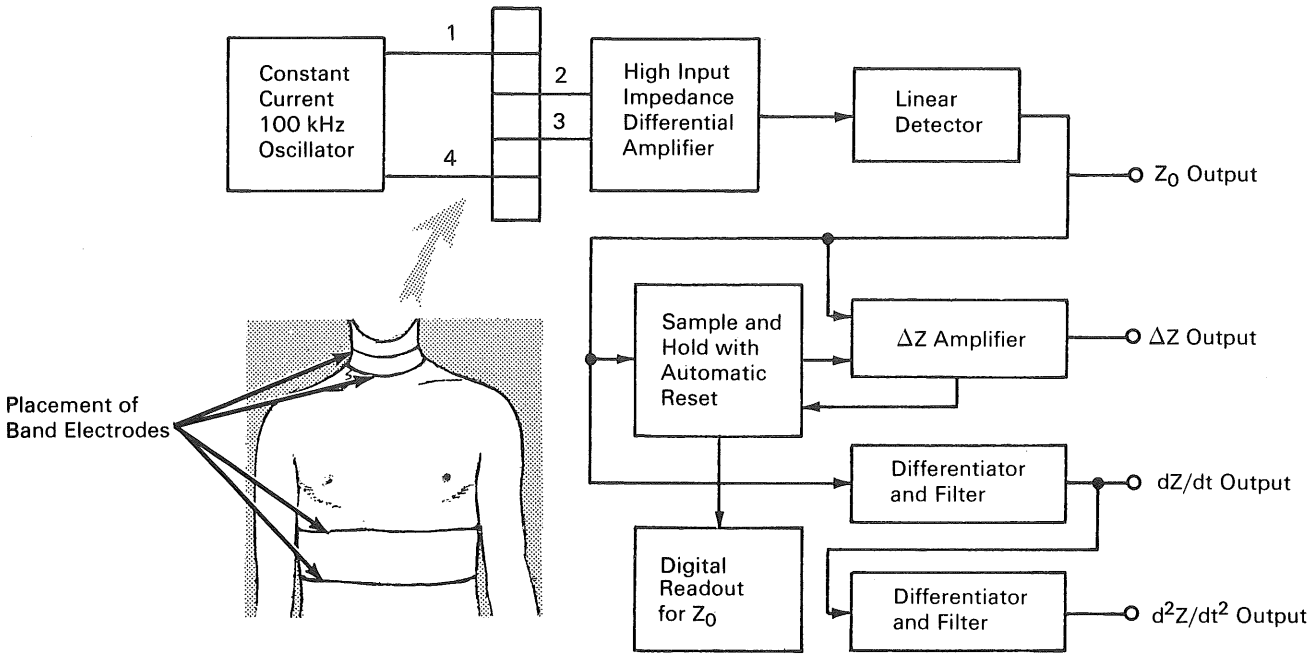

A four-electrode impedance plethysmograph has been developed to satisfy a need in medical clinics and research laboratories for a simple, bloodless method of measuring ventricular stroke volume or cardiac output of humans. In using the instrument, two band electrodes are placed around the subject's neck, a third band is placed around the thorax at the level of the xiphisternal joint, and a fourth band around the lower abdomen. The electrodes at the upper neck and the abdomen are excited by a 100 kHz sinusoidal current and the resultant voltage (impedance) changes occurring with the cardiac cycle are monitored from the other two electrodes. Stroke volume is calculated from the first time derivative (dz/dt) of the impedance change data, using a formula relating impedance change to volume change in a conducting medium. The new instrument is automatic, operates with only one recording channel, and minimizes patient discomfort.

As shown in the block diagram, current from the 100-kHz oscillator is fed to the thorax (bands 1 and 4) by means of coaxial cables. These have electrically driven shields to reduce the effective cable capacity and thereby maintain high output impedance at the electrodes. The voltage from the thorax (bands 2, 3) is recorded by a differential amplifier having coaxial leads. The use of this amplifier allows a ground to be placed anywhere on the body. The differential input impedance of the amplifier measured at the cable ends using 100 kHz current is 10^5 ohms. Positive feedback

(continued overleaf)

This document was prepared under the sponsorship of the National Aeronautics and Space Administration. Neither the United States Government nor any person acting on behalf of the United States Government assumes any liability resulting from the use of the information contained in this document, or warrants that such use will be free from privately owned rights.

is used on the input to reduce the effects of cable capacity. The common mode rejection is 50 dB at 100 kHz. The output of the differential amplifier is fed to a linear detector, whose output in turn is fed to a stable sample and hold circuit and to the ΔZ (impedance change) amplifier. This amplifier also receives an input from the sample and hold circuit and subtracts the two inputs to give the ΔZ output.

The sample portion of the sample and hold circuit can be operated either manually by a switch or automatically. The automatic operation is achieved by sensing the output of the ΔZ amplifier and then sampling when the output exceeds an adjustable preset limit. This allows the system to record the small ΔZ changes due to the cardiac signal; but if respiration, movement, or other artifact causes a larger change in ΔZ, the system will automatically rebalance in approximately 40 milliseconds. The output of the detector is also fed to two analog differentiators to give the first and second time derivatives (dz/dt and d^2z/dt^2 respectively). The null balance circuit connected to the sample and hold output, nulls an accurate dc voltage against the output of the sample and hold circuit to accurately measure the value of the mean impedance Z_0.

Significant features of this impedance plethysmograph are as follows:

1. High output impedance (10^5 ohms) at the electrodes for the current source.
2. High input impedance (10^5 ohms) at the electrodes for the voltage pickup system.
3. Use of a floating electrode system, not requiring grounding.
4. One percent absolute accuracy and linearity
5. Fully automatic operation, with a balancing time of 40 milliseconds.
6. Manual balancing that requires only the movement of one switch.
7. A low-noise first derivative output (80 mv peak to peak).
8. Power required, 25 watts at 110 vac (50–400 Hz); weight, 16 lbs.; volume less than 1 cubic ft.

Note:

Complete technical details may be obtained from:
Technology Utilization Officer
Manned Spacecraft Center
Houston, Texas 77058
Reference: B68-10220

Patent status:

No patent action is contemplated by NASA.

Source: W. G. Kubicek, R. P. Patterson, and D. A. Witsoe
of the University of Minnesota
under contract to
Manned Spacecraft Center
(MSC-11447)

NASA TECH BRIEF

NASA Tech Briefs are issued to summarize specific innovations derived from the U.S. space program, to encourage their commercial application. Copies are available to the public at 15 cents each from the Clearinghouse for Federal Scientific and Technical Information, Springfield, Virginia 22151.

Semiconductor AC Static Power Switch

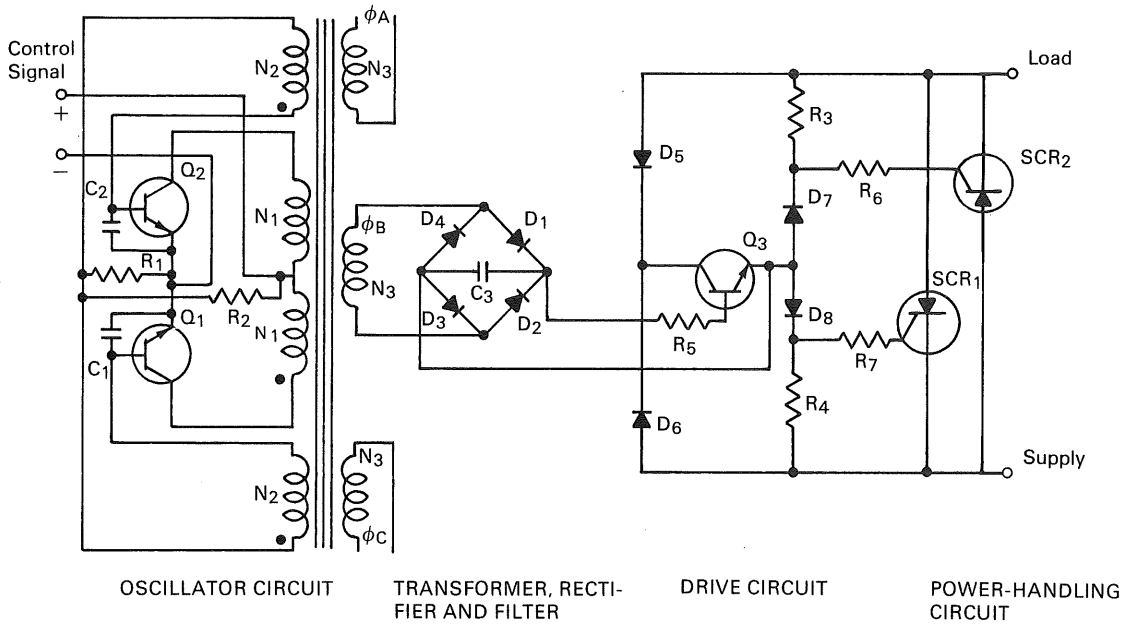

The problem:

Switches for aerospace power systems must have long life and high reliability and must operate satisfactorily in severe environments, including high vibration and shock conditions. Conventional electromechanical switches and relays often have undesirable characteristics for these applications; contact bounce, contact pitting, arcing, slow switching speed, etc.

The solution:

The construction of an AC (400 cps) static switch using semiconductors such as transistors and silicon controlled rectifiers (SCR's) which are reliable, capable of long life, and contain no moving parts.

How it's done:

Minimum power drain from the control signal is achieved by having the control signal turn on a small switch which in turn supplies turn-on power to the main SCR's. Since the control signal may or may not be grounded, an oscillator–transformer–rectifier circuit provides isolation between the control signal and the switch, and permits the use of a single control signal to operate all three phases of the switch.

The four main sections of the switch are the oscillator circuit, rectifier and filter, drive circuit, and power-handling circuit.

The oscillator is an astable multivibrator using two signal transistors (Q_1 and Q_2) that alternately conduct

(continued overleaf)

This document was prepared under the sponsorship of the National Aeronautics and Space Administration. Neither the United States Government nor any person acting on behalf of the United States Government assumes any liability resulting from the use of the information contained in this document, or warrants that such use will be free from privately owned rights.

and cut off. The input is 10 volts DC at 10 milliamperes (100 mW) and the output power is 60 milliwatts. The switch will operate with control signal input as low as 5 volts at 5 milliamperes over its temperature operating range of −40° to 80°C. The oscillator transformer has three output windings, designed for 3.5 volts at 6 milliamperes each. Each winding feeds a full-wave bridge rectifier and filter, the output of which is 2 volts. This voltage is applied to the drive transistor (Q_3) which saturates and in turn supplies power from the power line to the power handling SCR's through D_5 to D_6, D_7 to D_8, and R_6 to R_7.

The switch has positive turn-on over its temperature operating range when the power line voltage is at least 8 volts. Under normal conditions, the drive transistor dissipates less than 0.1 watt. However, if the switch is turned on when the AC supply voltage is at its maximum, the base drive will not be sufficient to hold the transistor in saturation. For this particular application, as much as 225 watts peak power may be dissipated in the drive transistor; thus, a high power transistor is used. The switch has a design rating of 4 amperes and has a continuous overload capability of 14 amperes for a range of heat-sink temperatures from −40° to 80°C.

Notes:

1. The desirable characteristics of this static switch are the absence of moving parts (and the associated wear), and the high gain possibilities between the control power and the power transferred.
2. Due to their capacity for a large number of operations, static switches are particularly suited to applications such as on–off type regulation, position controls for the orientation of solar panels, radio antennas, flashing lights, etc. They are also useful in applications which require fast response time such as the interconnection of alternators for parallel operation. Due to their relatively high resistance to shock and vibration, static switches are well suited to applications where accidental switching caused by mechanical vibration or shock cannot be tolerated.
3. Inquiries concerning this innovation may be directed to:

   Technology Utilization Officer
   Lewis Research Center
   21000 Brookpark Road
   Cleveland, Ohio 44135
   Reference: B68-10224

Patent status:

No patent action is contemplated by NASA.

Source: James Vrancik
(LEW-10344)

AEC-NASA TECH BRIEF

AEC-NASA Tech Briefs describe innovations resulting from the research and development program of the U.S. AEC or from AEC-NASA interagency efforts. They are issued to encourage commercial application. Tech Briefs are published by NASA and may be purchased, at 15 cents each, from the Clearinghouse for Federal Scientific and Technical Information, Springfield, Virginia 22151.

Lightweight Heater Generates High Temperatures from Low Current

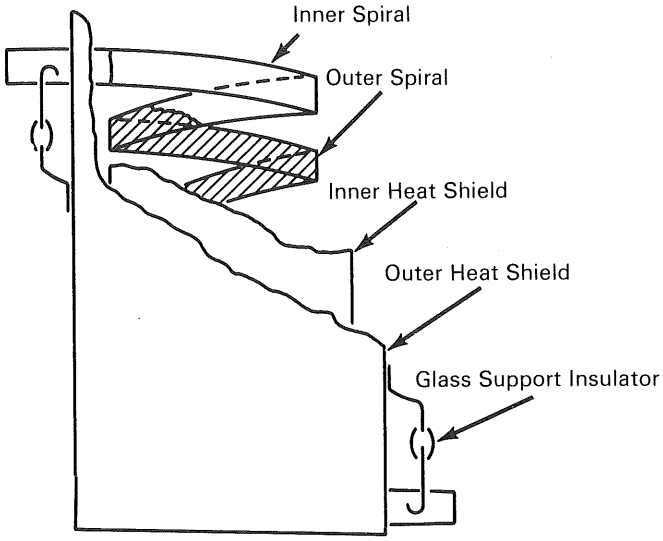

The problem:

To design a small heater with a high temperature capability to operate on low current, and be of simple, compact configuration and light in weight.

The solution:

A double spiral molybdenum heater element that uses low current, needs no insulation, and requires support only at the ends, which are also the power input points.

How it's done:

Two molybdenum spirals are wound with the same pitch, but in opposite directions. The spirals are assembled one inside the other and are spot-welded for support where they intersect. This eliminates sag in the heater. The double spiral heater is the electrical equivalent of a single spiral element with strips of the same length but twice the width.

Notes:

1. Because there is no insulation or internal support necessary, the heater is lightweight. It is essentially rigid so that it could be used in portable equipment and appliances or in a confined space. Since it is easily sterilized, it can be used in clean rooms and sterile environments. Its temperature potential will vary with its size and environment.
2. In development tests, a four- to five-inch long double heater in a vacuum generated a temperature of 1000°C and required a current of only 75 amps. It has proven extremely durable.
3. Inquiries concerning this innovation may be directed to: Sandia Office of Industrial Cooperation Org. 3413
   Sandia Corporation
   Post Office Box 5800
   Albuquerque, New Mexico 87115
   Reference: B68-10223

(continued overleaf)

This document was prepared under the sponsorship of the Atomic Energy Commission and/or the National Aeronautics and Space Administration. Neither the United States Government nor any person acting on behalf of the United States Government assumes any liability resulting from the use of the information contained in this document, or warrants that the use of any information, apparatus, method, or process disclosed in this document may not infringe privately owned rights.

Patent status:

No patent action is contemplated by AEC or NASA.

Source: E. L. Hansen
(SAN-10004)

NASA TECH BRIEF

NASA Tech Briefs are issued to summarize specific innovations derived from the U.S. space program, to encourage their commercial application. Copies are available to the public at 15 cents each from the Clearinghouse for Federal Scientific and Technical Information, Springfield, Virginia 22151.

Improved Atomic Resonance Gas Cell for Use in Frequency Standards

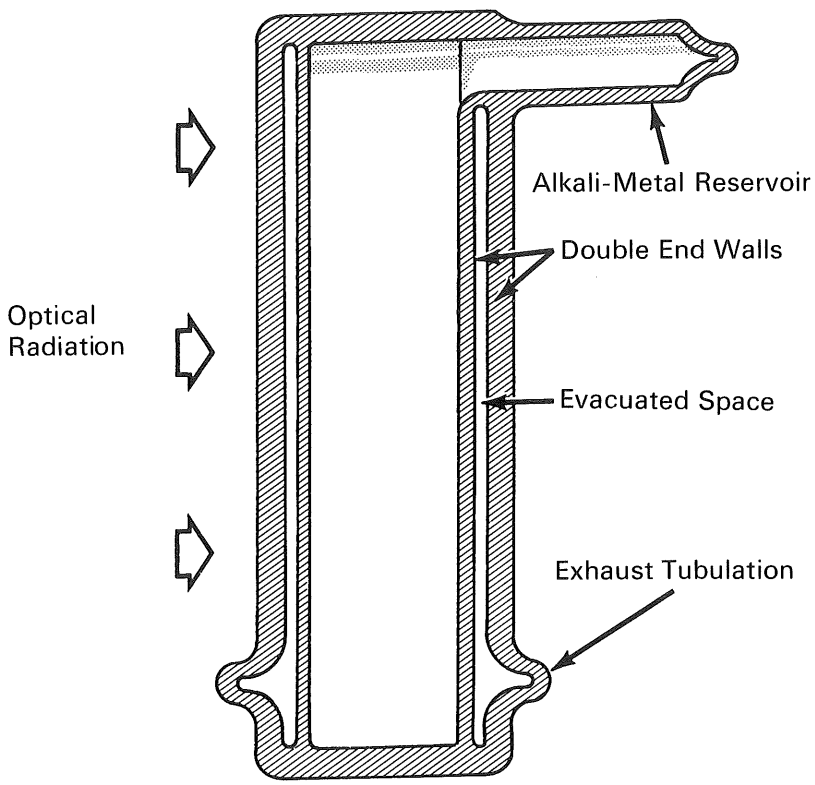

An atomic resonance gas cell has been designed to maintain a stable operating frequency in the presence of pressure fluctuations in the ambient atmosphere. In earlier designs, the effects of atmospheric pressure fluctuations on the operating frequency of the cell were somewhat reduced by providing the cell with domed, instead of flat, end walls. The new design, employing a double-wall construction, accomplishes an order-of-magnitude reduction in pressure sensitivity as compared to the domed end-wall cell.

The new atomic resonance gas cell includes an envelope which is transparent to radiation in the optical region and to microwave energy at the atomic resonance frequency of the alkali-metal vapor (e.g., rubidium or cesium mixed with an inert buffer gas) within the envelope. The end walls consist of an inner disc-shaped partition and an outer disc-shaped partition which enclose an evacuated space. This space serves to prevent atmospheric pressure from being transmitted through the end wall structure to the gas

(continued overleaf)

This document was prepared under the sponsorship of the National Aeronautics and Space Administration. Neither the United States Government nor any person acting on behalf of the United States Government assumes any liability resulting from the use of the information contained in this document, or warrants that such use will be free from privately owned rights.

within the cell. The alkali metal is coated on the inside wall of a tubular extension which serves as a reservoir for the metal. At the operating temperature of the cell (85°C for rubidium), the alkali metal is vaporized into the cell proper.

In use, the gas cell is arranged within a microwave cavity resonator so that the microwave fields at the atomic resonance frequency are coupled through the cell walls into the buffered alkali-metal vapor. Optical pumping radiation is passed axially through the cell to raise the vapor to a nonequilibrium energy state from which microwave energy transitions may be induced to obtain microwave atomic resonance of the vapor. In a frequency standard, the microwave cavity is tuned for resonance at the resonance of a hyperfine field-independent transition, and microwave resonance of the gas is detected to derive a frequency-standard output.

Patent status:

Title to this invention has been waived under the provisions of the National Aeronautics and Space Act [42 U.S.C. 2457 (f)], to Varian Associates, 611 Hansen Way, Palo Alto, California 94303.

Source: G. R. Huggett
of Varian Associates
under contract to
Manned Spacecraft Center
(MSC-11666)

NASA TECH BRIEF

NASA Tech Briefs are issued to summarize specific innovations derived from the U.S. space program, to encourage their commercial application. Copies are available to the public at 15 cents each from the Clearinghouse for Federal Scientific and Technical Information, Springfield, Virginia 22151.

Electrocardiograph Transmitted by RF and Telephone Links in Emergency Situations

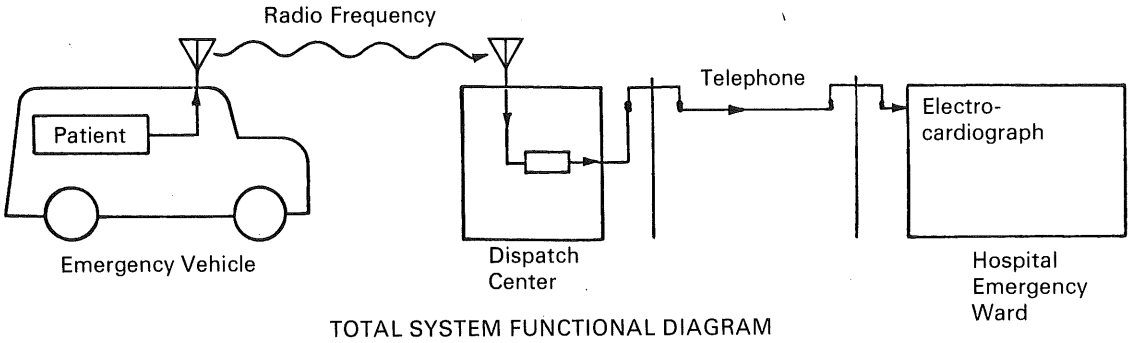

TOTAL SYSTEM FUNCTIONAL DIAGRAM

In the handling of injured or stricken human subjects at a distance from hospital emergency facilities, diagnosis of required therapy has in the past been delayed by that time increment involved in transporting the subjects to the hospital. To eliminate the major portion of this delay, a system has been devised whereby the cardiovascular function of the subject may be monitored at the hospital facility by means of an rf/telephone-transmitted electrocardiograph of the subject from the ambulance immediately following arrival at the emergency scene.

This system permits the use of voice (standard) rf transmitting and receiving components between the ambulance and a centralized dispatch station (to afford optimum use of hospital selection by location) and commercial voice telephone connection to the selected hospital emergency room. The overall system is illustrated above and the separate functional units are shown in the following illustrations. Success with this idea has been accomplished by a combination of simple amplification and basic filtering techniques in the emergency vehicle electronics and the use of relatively anechoic devices for speaker-to-microphone arrangement at the three operational locations, emergency vehicle, dispatch center, and hospital emergency ward.

Notes:

1. This technique should be of interest to emergency services and all rescue organizations.
2. Inquiries concerning this invention may be directed to:

   Technology Utilization Officer
   Flight Research Center
   Post Office Box 273
   Edwards, California 93523
   Reference: B68-10233

Patent status:

Inquiries about obtaining rights for the commercial use of this invention may be made to NASA, Code GP, Washington, D.C. 20546.

Source: Charles E. Lewis, Jr., Lewis R. Carpenter, and Robert T. McDonald (FRC-10031)

(continued overleaf)

This document was prepared under the sponsorship of the National Aeronautics and Space Administration. Neither the United States Government nor any person acting on behalf of the United States Government assumes any liability resulting from the use of the information contained in this document, or warrants that such use will be free from privately owned rights.

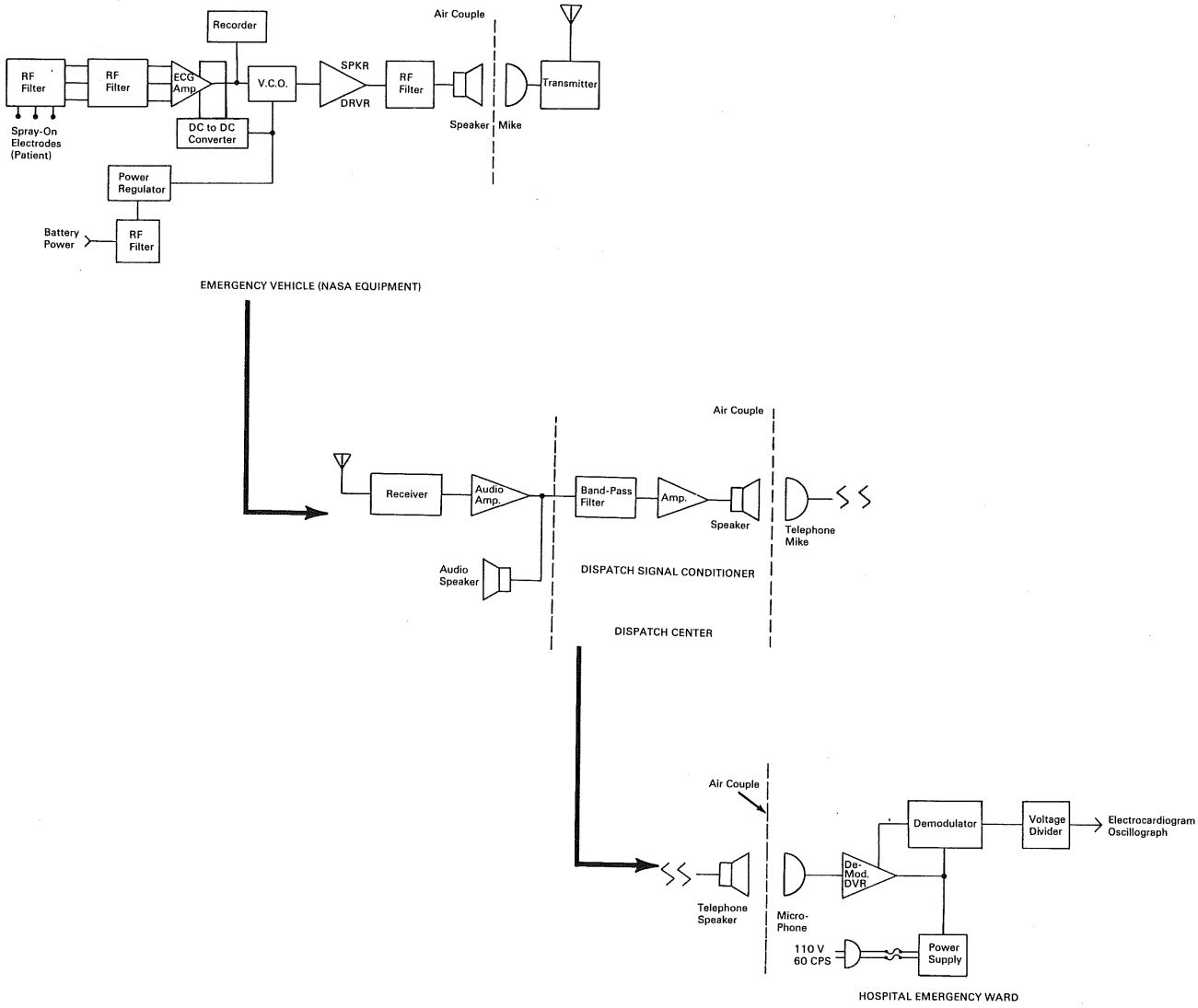
Recorder
Air Couple
RF Filter
RF Filter
ECG Amp.
V.C.O.
SPKR
DRVR
RF Filter
Transmitter
Spray-On Electrodes (Patient)
DC to DC Converter
Speaker
Mike
Power Regulator
Battery Power
RF Filter
EMERGENCY VEHICLE (NASA EQUIPMENT)
Air Couple
Receiver
Audio Amp.
Band-Pass Filter
Amp.
Speaker
Telephone Mike
Audio Speaker
DISPATCH SIGNAL CONDITIONER
DISPATCH CENTER
Air Couple
Demodulator
Voltage Divider
Electrocardiogram Oscillograph
De-Mod. DVR
Telephone Speaker
Micro-Phone
110 V 60 CPS
Power Supply
HOSPITAL EMERGENCY WARD

AEC-NASA TECH BRIEF

AEC-NASA Tech Briefs describe innovations resulting from the research and development program of the U.S. AEC or from AEC-NASA interagency efforts. They are issued to encourage commercial application. Tech Briefs are published by NASA and may be purchased, at 15 cents each, from the Clearinghouse for Federal Scientific and Technical Information, Springfield, Virginia 22151.

Quasi-Static Vapor Pressure Measurements on Reactive Systems in Inert Atmosphere Box

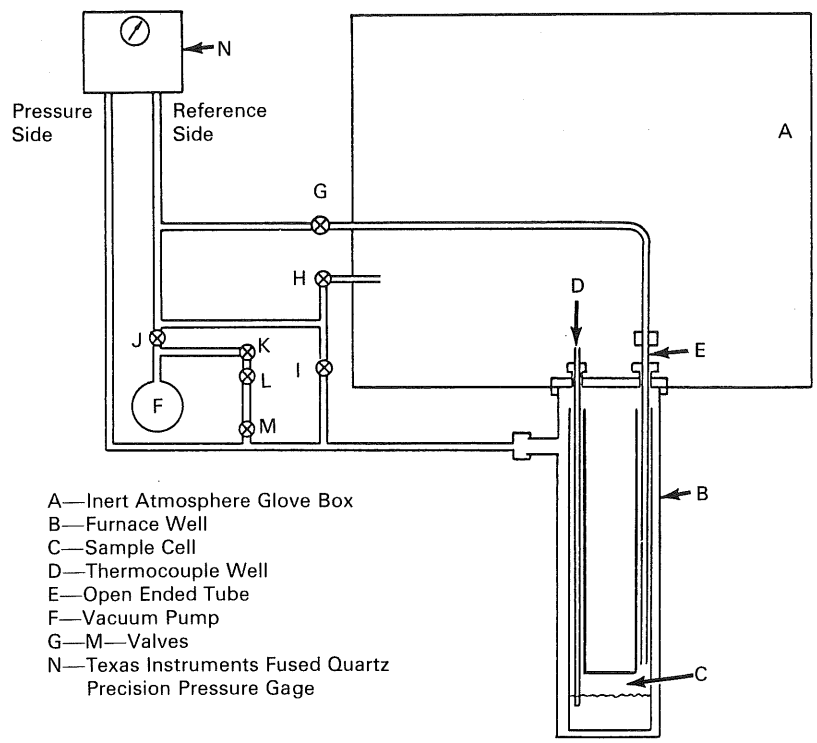

Application:

The apparatus permits vapor pressure measurements (and all preparatory operations) to be made on air-sensitive systems in an inert atmosphere glove box. Once the apparatus is loaded with the sample and all connections made, all measuring operations may be performed outside the box. The method is advantageous if the system must be isolated or removed from the experimenter.

Description:

The apparatus is, in effect, a single-tube adaptation of the double-tube quasi-static technique. A true single-tube design would help minimize sample composition changes caused by holdup in the condensation zone. In such a design the thermocouple well could be welded into the sample cell.

The sample temperature remains steady and uniform during a measurement. At the start of a measurement, the box, including the reference side of the gauge, is full of helium at a pressure greater than the vapor pressure of the sample. With valves H, I, and J closed and G open, pressure is reduced in steps by operating valves K, L, and M. The volume between valves K and L is smaller than that between valves L

(continued overleaf)

This document was prepared under the sponsorship of the Atomic Energy Commission and/or the National Aeronautics and Space Administration. Neither the United States Government nor any person acting on behalf of the United States Government assumes any liability resulting from the use of the information contained in this document, or warrants that the use of any information, apparatus, method, or process disclosed in this document may not infringe privately owned rights.

and M, so a choice of pressure decrement is available, depending on the sequence of operation of valves K, L, and M.

During the decremental pressure changes, the pressure gauge functions as a differential pressure detector. When the first long-lasting pressure difference is established (30 seconds or more), the pressure has been reduced to, or slightly below, the vapor pressure of the sample. At this point, valve G is closed; valves H, I, and K remain closed; and valve J is opened to evacuate the reference side of the gauge. This done, the pressure indicated on the pressure gauge is recorded as the vapor pressure of the sample at the given temperature.

To break vacuum in the system, valve J is closed and valve H opened slowly to admit helium from the glove box until the gauge reads zero. Pressures throughout the system now have been equalized. Valves G and I are opened and bleeding is continued slowly with valve H. In this way, helium is admitted to both arms of the sample cell and to tube E to prevent sweeping vapor out of the cell.

Notes:

1. Details are available in *Review of Scientific Instruments,* vol. 37, no. 6, p. 717–719, June 1966.
2. Additional information may be obtained from:
   Office of Industrial Cooperation
   Argonne National Laboratory
   9700 South Cass Avenue
   Argonne, Illinois 60439
   Reference: B68-10236

Source: A. K. Fischer
Chemical Engineering Division
(ARG-90142)

Patent status:

Inquiries about obtaining rights for commercial use of this innovation may be made to:

Mr. George H. Lee, Chief
Chicago Patent Group
U.S. Atomic Energy Commission
Chicago Operations Office
9800 South Cass Avenue
Argonne, Illinois 60439

NASA TECH BRIEF

NASA Tech Briefs are issued to summarize specific innovations derived from the U.S. space program, to encourage their commercial application. Copies are available to the public at 15 cents each from the Clearinghouse for Federal Scientific and Technical Information, Springfield, Virginia 22151.

Astronaut Space Suit Communication Antenna

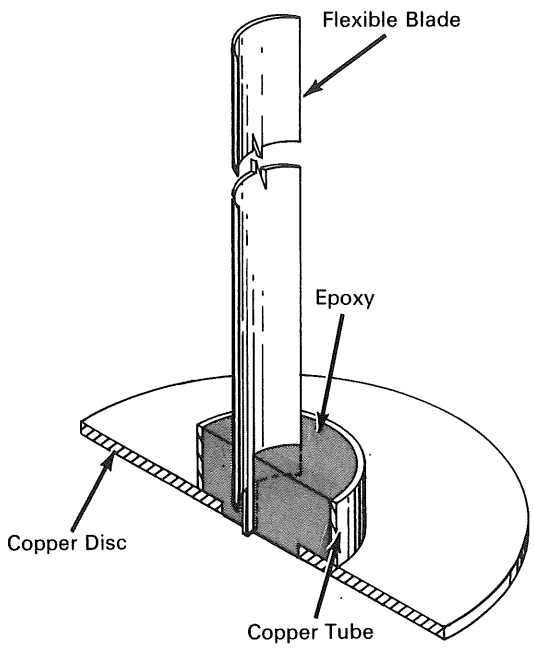

In carrying out his investigations on the moon surface, the astronaut must maintain communication with the Lunar Excursion Module (LEM) as he moves about. He must also have unencumbered use of his hands. For these reasons, an investigation has been made of communication antenna design for mounting on the astronaut's backpack.

One design consists of a dual frequency transmission line mounted in a foam filled fiberglass cavity. Tests of this antenna resulted in worst case null depths from −19 to −30 db for normal backpack heights, thus reducing the maximum useful range for astronaut-to-LEM to less than 400 yards.

A second design, consisting of a spring steel monopole in a blade-type configuration, has shown superior performance characteristics. This antenna is mounted in a copper cup filled with a potting compound that is recessed in the center to facilitate bending the blade flat for stowing when not in use. Tests of this antenna resulted in worst case null depths from −5 to −11 db, amounting to an appreciable gain in maximum useful range of astronaut-to-LEM. This antenna exhibits an unusually broad bandwidth characteristic over the LEM operating frequency range of 259.7 MHz to 296.8 MHz with a voltage standing wave ratio of 1.6:1 or less.

(continued overleaf)

This document was prepared under the sponsorship of the National Aeronautics and Space Administration. Neither the United States Government nor any person acting on behalf of the United States Government assumes any liability resulting from the use of the information contained in this document, or warrants that such use will be free from privately owned rights.

Notes:

1. The wide bandwidth, not normally associated with monopole antennas, is mainly due to the relatively large mounting cup diameter of 1-1/8 inches and the favorable impedance characteristic, achieved by using the backpack hard cover and the thermal garment for a ground plane. The monopole antenna operates as an asymmetric dipole because of the irregular ground plane with a characteristic impedance between the 36-ohm monopole and the 72-ohm dipole, represented by the coax lead.
2. Inquiries concerning this innovation may be directed to:

   Technology Utilization Officer
   Manned Spacecraft Center
   Houston, Texas 77058
   Reference: B68-10238

Patent status:

No patent action is contemplated by NASA.

Source: Jefferson F. Lindsey, III
and Gareth H. Nason
(MSC-12101)

NASA TECH BRIEF

NASA Tech Briefs are issued to summarize specific innovations derived from the U.S. space program, to encourage their commercial application. Copies are available to the public at 15 cents each from the Clearinghouse for Federal Scientific and Technical Information, Springfield, Virginia 22151.

Parallel-to-Serial Biphase-Data Converter

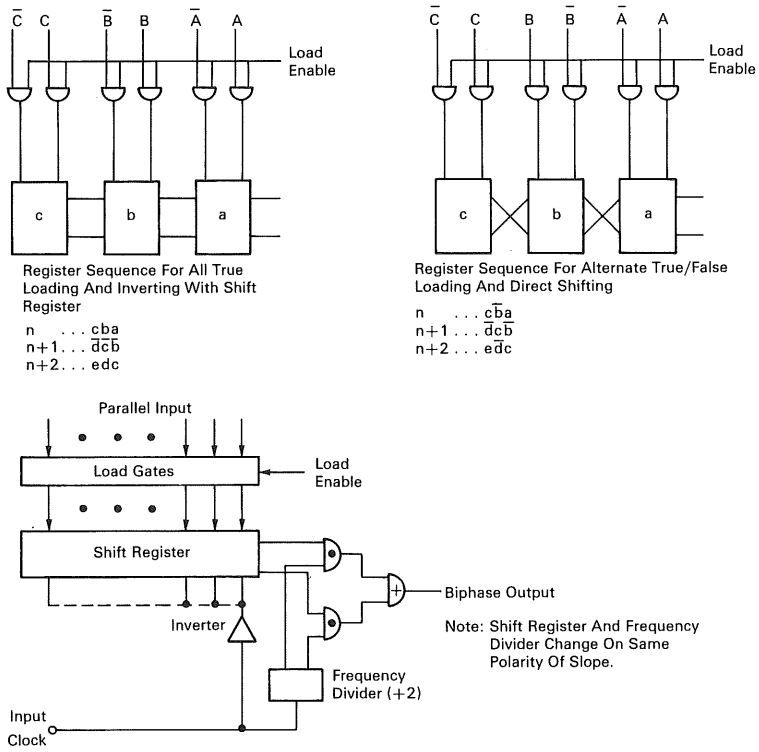

A data converter has been designed to produce a serial biphase output signal from parallel input data. Alternate bits are loaded into a shift register in complement form so that the bits appear at the end of the shift register in a true-complement form sequence. Use of a simple "exclusive-or" and a frequency divider generates the biphase signal with no timing "race" conditions. The logic illustrated generates biphase by (1) causing an output midbit voltage transition for each frequency divider change by forcing a change in comparison state of the "exclusive-or" output gates, and (2) causing the shift register output stage to change state (hence comparison state) for two sequential bits of the same state and to remain the same (no comparator change) to generate a change in output bit state.

The shift register and frequency divider flip-flops change state on the same polarity of input slope. With an inverter placed between the frequency divider input and shift register input, the frequency divider

(continued overleaf)

This document was prepared under the sponsorship of the National Aeronautics and Space Administration. Neither the United States Government nor any person acting on behalf of the United States Government assumes any liability resulting from the use of the information contained in this document, or warrants that such use will be free from privately owned rights.

changes states one-half bit period before the shift register receives a clock pulse. Both frequency divider and shift register are closed at the input clock rate.

Notes:

1. Logical state of a bit is decided by either (a) loading the parallel data alternately true and false, or (b) coupling shift stages so that a stage assumes the logical inverse of the preceding stage for each shift pulse. Shift operation occurs on one clock pulse slope while the count operation occurs on the other.
2. Inquiries concerning this innovation may be directed to:

   Technology Utilization Officer
   Manned Spacecraft Center
   Houston, Texas 77058
   Reference: B68-10241

Patent status:

No patent action is contemplated by NASA.

Source: R. D. Truelove
of North American Aviation, Inc.
under contract to
Manned Spacecraft Center
(MSC-11600)

NASA TECH BRIEF

NASA Tech Briefs are issued to summarize specific innovations derived from the U.S. space program, to encourage their commercial application. Copies are available to the public at 15 cents each from the Clearinghouse for Federal Scientific and Technical Information, Springfield, Virginia 22151.

Welder Analyzer

A welder analyzer circuit has been developed for the evaluation and certification of resistance welding machines. The analyzer is capable of measuring peak current, peak voltage, peak power, total energy, and first-pulse energy. The analyzer may be used as an energy monitor while welding is being performed, or it may be used with a precision shunt load for a pure electrical evaluation of the weld machine.

When the welder analyzer is used in conjunction with a standard shunt load, it is a system that permits the weld machine to be completely analyzed and evaluated. In itself, the analyzer will not ensure a perfect weld. Its primary purpose is to enable the evaluation of weld strength from measurements of the operating parameters (peak current, peak voltage, peak power, total energy, and first-pulse energy). The shunt, which functions as a constant, standard load is used by removing the welding electrodes and clamping the upper and lower shunt arms into the electrode slots. By using the shunt in this manner, the pressure variable is eliminated from the electrical measurements. Data obtained from experimental measurements which establish the pressure, peak power, and energy required to produce an optimum weld on two workpieces of the same size with a given resistance welder should produce the same (optimum) results with any other resistance welder.

Note:

Details may be obtained from:

Technology Utilization Officer
Manned Spacecraft Center
Houston, Texas 77058
Reference: B68-10242

Patent status:

No patent action is contemplated by NASA.

Source: L. L. Miller
of General Motors Corporation
under contract to
Manned Spacecraft Center
(MSC-12068)

Category 01

This document was prepared under the sponsorship of the National Aeronautics and Space Administration. Neither the United States Government nor any person acting on behalf of the United States Government assumes any liability resulting from the use of the information contained in this document, or warrants that such use will be free from privately owned rights.

NASA TECH BRIEF

NASA Tech Briefs are issued to summarize specific innovations derived from the U.S. space program, to encourage their commercial application. Copies are available to the public at 15 cents each from the Clearinghouse for Federal Scientific and Technical Information, Springfield, Virginia 22151.

Improved Traveling Wave Maser Amplifier

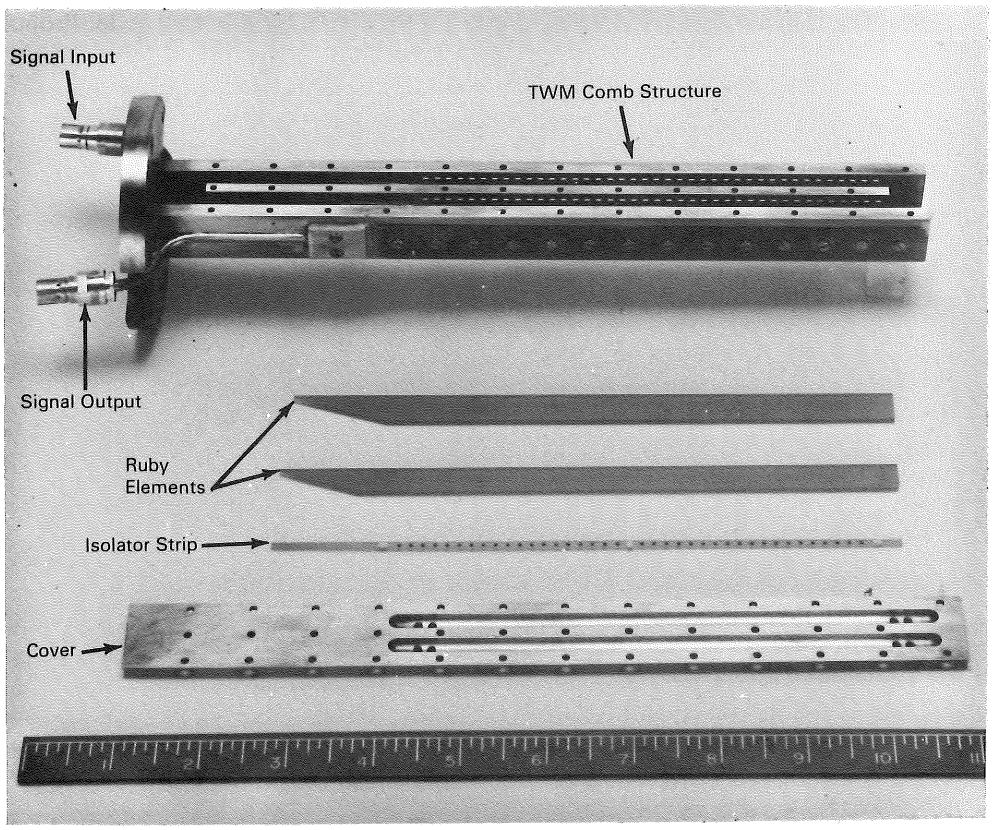

A traveling wave maser (TWM) that operates at S-band frequencies is characterized by a greatly improved gain-bandwidth product with relatively low equivalent-noise temperature. Tests indicate that its performance exceeds that of any other type of S-band amplifier. The improved performance and easier fabrication of the new maser were achieved by combining the best features of previous designs in a single structure. These features include fabrication of the comb structure from a single piece of copper; use of simple signal-coupling loops; an improved clamping procedure for the ruby elements and isolator; use of higher quality ruby (zero-degree Czochralski ruby); use of single crystal yttrium iron garnet (YIG) isolator material; use of ruby, rather than passive material, to support the isolator discs; use of a comb-tooth shape

(continued overleaf)

This document was prepared under the sponsorship of the National Aeronautics and Space Administration. Neither the United States Government nor any person acting on behalf of the United States Government assumes any liability resulting from the use of the information contained in this document, or warrants that such use will be free from privately owned rights.

that yields maximum gain; and use of internal field-staggering coils with iron shims to adjust gain and bandwidth of the maser.

The physical appearance and dimensions of the major components of the maser are represented in the illustration. These include the unitary waveguide-comb structure; the ruby elements that occupy the spaces on each side of a comb (four in all); the isolator strip comprised of a ruby element and YIG discs; and the waveguide cover.

The maser amplifier provides 46-dB net gain and a 3-dB bandwidth of 46 MHz when operated at a refrigerator temperature of 4.4°K. The equivalent input noise temperature (at the ambient waveguide interface) was measured to be less than 6°K from 2270 to 2300 MHz.

Notes:

1. This maser could find application in world-wide communication (TV and multichannel telephone) via satellite. The intended use is for deep space communication.
2. Details may be obtained from:

   Technology Utilization Officer
   NASA Pasadena Office
   4800 Oak Grove Drive
   Pasadena, California 91103
   Reference: B68-10244

Patent status:

Inquiries about obtaining rights for the commercial use of this invention may be made to NASA, Code GP, Washington, D.C. 20546.

Source: R. C. Clauss
Jet Propulsion Laboratory
(NPO-10548)

NASA TECH BRIEF

NASA Tech Briefs are issued to summarize specific innovations derived from the U.S. space program, to encourage their commercial application. Copies are available to the public at 15 cents each from the Clearinghouse for Federal Scientific and Technical Information, Springfield, Virginia 22151.

Miniature Pressure Transducer for Stressed Member Application

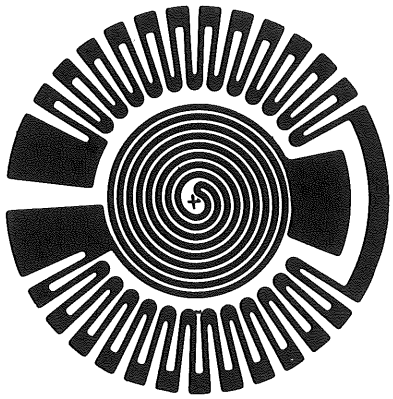

Strain Gage Pattern

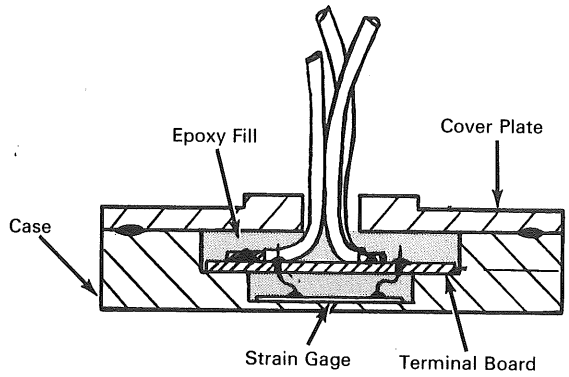

A miniature pressure transducer has been designed and fabricated in such a way that it responds to static or dynamic pressures acting against a structural surface without introducing errors caused by stresses in the structural surface. This is accomplished by a thin stainless steel pressure sensing diaphragm with an attached foil strain gage. The strain gage is bonded to the stressed surface and has a very thin profile and low mass.

A metal film strain gage is installed on the inner surface of the housing diaphragm by conventional strain gage application procedures, using hard epoxy adhesive. Gold-plated wires 0.001 inch in diameter are soldered to the three tabs of the strain gage element. These wires are passed through holes in a miniature terminal board that is bonded to a land at the center of the transducer housing. The 0.001-inch diameter wires are each soldered to one end of the terminal element. Larger (0.019) lead-in wires are soldered to the other end of each terminal element and passed out through the access hole in the transducer cover plate. The cover plate is then joined to the transducer housing by an overlapping spot-weld process using a capacitor discharge welder. The void between the cover plate and terminal board is filled with epoxy to afford maximum protection for lead wire ends and to provide a seal for the back side of the transducer.

Notes:

1. Zero balance of 4 transducers tested did not deviate more than 0.03% of full scale per °F over a temperature range of 32° to 120°F. Sensitivity of the 4 transducers remained within 0.47% of their respective full scale room temperature outputs over the same temperature range.
2. Inquiries concerning this innovation may be directed to:

   Technology Utilization Officer
   Manned Spacecraft Center
   Houston, Texas 77058
   Reference: B68-10246

(continued overleaf)

This document was prepared under the sponsorship of the National Aeronautics and Space Administration. Neither the United States Government nor any person acting on behalf of the United States Government assumes any liability resulting from the use of the information contained in this document, or warrants that such use will be free from privately owned rights.

Patent status:

No patent action is contemplated by NASA.

Source: R. R. Walker and C. G. Wickham
of North American Aviation, Inc.
under contract to
Manned Spacecraft Center
(MSC-11869)

NASA TECH BRIEF

NASA Tech Briefs are issued to summarize specific innovations derived from the U.S. space program, to encourage their commercial application. Copies are available to the public at 15 cents each from the Clearinghouse for Federal Scientific and Technical Information, Springfield, Virginia 22151.

Harmonic Distortion Analyzer Speeds Setup of Magnetic Tape Recorders

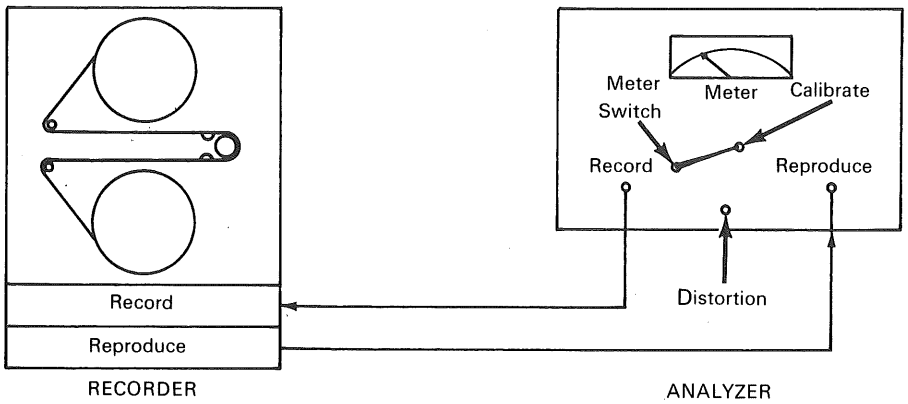

A harmonic distortion analyzer has been developed to effect rapid and accurate setup and calibration of magnetic tape instrumentation recorders. When setting up and calibrating such recorders, it is necessary to establish a proper recording-head current to obtain an acceptable signal-to-noise ratio and minimize distortion products in the recorded data signal. This analyzer conforms to the generally accepted criterion that the proper recording level has been achieved when a signal at a selected frequency is recorded on a properly functioning recorder at such a record level as to cause the reproduced signal to have 1% third-harmonic content. It would be particularly useful in facilities where a large number of instrumentation recorders are in operation and it becomes necessary to make frequent checks for proper recording level and performance.

The analyzer is portable (weighs less than 5 pounds). It requires no warmup period and need not be calibrated for normal usage. No power is consumed by its selective filter components, so that failures that would require component replacement and instrument recalibration are precluded. The analyzer has its own precision signal source and indicating meter, eliminating the need for accessory test equipment which must be used with much more complicated-to-operate and costly commercially available wave analyzers. In contrast to the commercial instruments also, the new analyzer has only one functional front panel control and requires no special skill to operate. Average setup time with this analyzer is approximately 30 seconds per track. When necessary, the analyzer can be completely recalibrated in several minutes by any technician familiar with a standard rms meter and signal generators.

The harmonic distortion analyzer is connected to the magnetic tape recorder as shown in the sketch. The recorder is placed in a "record" mode at the

(continued overleaf)

This document was prepared under the sponsorship of the National Aeronautics and Space Administration. Neither the United States Government nor any person acting on behalf of the United States Government assumes any liability resulting from the use of the information contained in this document, or warrants that such use will be free from privately owned rights.

selected tape speed, and the precision signal from the analyzer is simultaneously recorded and reproduced. The meter switch on the analyzer panel is placed in the "calibrate" position, and the reproduce level of the recorder is adjusted for 100 percent indication on the meter. The switch is then placed in the "distortion" position, and the record level control on the recorder is adjusted to obtain an indication of 1 percent on the meter. This procedure is repeated (usually two or three times) until the meter consistently reads 100 percent in the "calibrate" position and 1 percent in the "distortion" position. This procedure is performed for each data track on the recorder.

Note:

Complete technical details may be obtained from:

Technology Utilization Officer
Goddard Space Flight Center
Greenbelt, Maryland 20771
Reference: B68-10254

Patent status:

Inquiries about obtaining rights for the commercial use of this invention may be made to NASA, Code GP, Washington, D.C. 20546.

Source: D. F. Tinari
(GSC-10198)

NASA TECH BRIEF

NASA Tech Briefs are issued to summarize specific innovations derived from the U.S. space program, to encourage their commercial application. Copies are available to the public at 15 cents each from the Clearinghouse for Federal Scientific and Technical Information, Springfield, Virginia 22151.

Acquisition of Pseudonoise Signals by Sequential Estimation

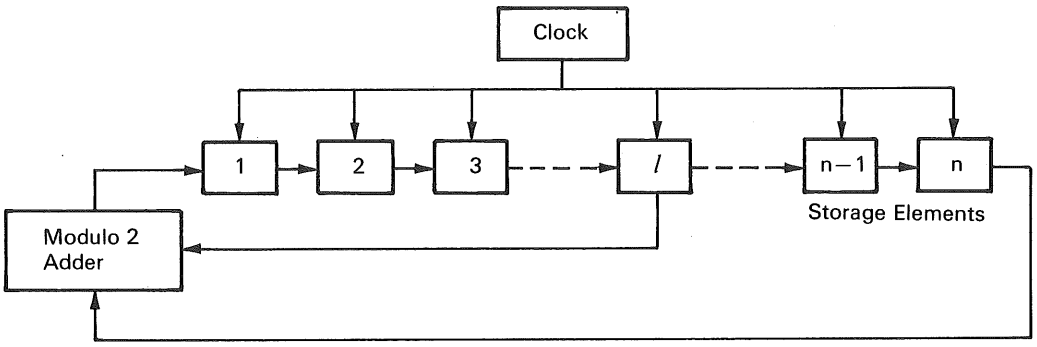

Pseudonoise digital modulation is used in a number of tracking and communications systems. In most cases it is necessary that the receivers of such systems bring an identical locally generated pseudonoise signal into time synchronism with the incoming pseudonoise signal. This acquisition process may require a relatively long time because of the period of the pseudonoise signals used and because of the autocorrelation properties of the signals.

A developmental acquisition system, which has been under study, has been given the acronym RASE, Rapid Acquisition by Sequential Estimation. This system has been shown to be particularly suitable for medium input signal-to-noise (S/N) ratios, a common condition of many high-quality tracking systems. The theoretical acquisition times agree closely with experimental values for the case where false alarm and false dismissal probabilities are low. Average acquisition time of 74 milliseconds has been demonstrated for a −10 db S/N ratio using a pseudonoise signal suitable for high-accuracy tracking to a range of 3,300 kilometers. Previous sweeping acquisition techniques for the same conditions would result in an average acquisition time of 1.7 seconds. The system is relatively simple and automatically provides shorter acquisition times and better S/N ratios than swept systems or matched-filter stepping acquisition systems.

The pseudonoise signals are usually generated by feedback shift registers of the form shown in the block diagram. The n-stage shift register shown can produce a binary sequence whose length is 2^n-1 bits. The transmitter and receiver each contain identical shift registers so that identical sequences are formed. In general, the received sequence may initially arrive having any phase with respect to the receiver generated sequence. It has been recognized that, in the absence of noise, the optimum acquisition technique is simply to load the first n received bits into the receiver sequence generator and let the generator start from that initial condition. It will then continue to produce a sequence which is approximately in phase with the incoming sequence. A tracking loop can

(continued overleaf)

This document was prepared under the sponsorship of the National Aeronautics and Space Administration. Neither the United States Government nor any person acting on behalf of the United States Government assumes any liability resulting from the use of the information contained in this document, or warrants that such use will be free from privately owned rights.

maintain the phase from that time on, following any variations of doppler due to target dynamics or other causes.

The RASE system makes its best estimate of the first n received bits, loads the receiver sequence generator with that estimate, and starts operation of the sequence generator and the tracking circuits. If the correct estimate was loaded, tracking will occur. At the same time, a cross-correlation is performed between the input signal and the signal from the local sequence generator. If the cross-correlation indicates the receiver to contain the correct sequence and tracking to be occurring, no further action is taken. If the cross-correlation indicates that an incorrect estimate was made, a new estimate of the input is made, loaded, and tracked. This process is continued until the correct estimate is finally obtained.

Note:

Details may be obtained from:

Technology Utilization Officer
Marshall Space Flight Center
Huntsville, Alabama 35812
Reference: B68-10258

Patent status:

No patent action is contemplated by NASA.

Source: R. B. Ward
of Lockheed Palo Alto Research Laboratory
under contract to
Marshall Space Flight Center
(MFS-13898)

NASA TECH BRIEF

NASA Tech Briefs are issued to summarize specific innovations derived from the U.S. space program, to encourage their commercial application. Copies are available to the public at 15 cents each from the Clearinghouse for Federal Scientific and Technical Information, Springfield, Virginia 22151.

Silicon Strain Sensors Enable Pressure Measurement at Cryogenic Temperatures

Diffused, heavily doped silicon strain-gage sensor elements have been developed for operation in pressure transducers over a wide temperature range. Optimization of gage characteristics, excitation-source impedance, bridge-circuit parameters, and transducer structure has led to the design of miniature pressure transducers which exhibit zero and sensitivity shifts of less than ±3 percent of full scale throughout the temperature range from +250° to −450°F (700°F temperature span). Small thermal mass combined with close coupling between a metallic diaphragm (force summing member) and sensor elements minimizes sensitivity to temperature transients. Silicon was selected as the most satisfactory semiconductor material from which to fabricate wide temperature range strain sensors for the following reasons: (1) Silicon offers the best combination of piezoresistive and mechanical properties of any known semiconductor material. (2) Silicon device processing techniques are well developed and readily adaptable to fabrication of miniature gage elements. (3) The piezoresistive behavior of silicon is sufficiently well known to permit prediction of gage characteristics on the basis of impurity type and concentration.

Although the sensors were specially developed for low-temperature operation, they perform equally well at much higher temperatures, thus providing continuous measurement capability over a 700°F temperature range.

Prototype pressure transducers (0.8-inch diameter × 1.1-inch length) incorporating the silicon sensor elements have met the following specifications:

Pressure Range: 0 to 2000 psig

Combined Nonlinearity and Hysteresis:
less than 1.1% F.S. above −320°F and less than 35% F.S. from −320°F to −450°F

Repeatability:
less than 1% F.S., except for one unit (of three) which indicated 9.5% at −446°F only

Compensated Temperature Range: −320° to +250°F

Temperature Effects within Specified Temperature Range:

0.321%/°F maximum from −108° to +250°F } Zero
2.2%/°F maximum from −320° +250°F }
0.064%/°F maximum from −320°F to +250° } Full
0.074%/°F maximum from −446° to +250°F } Range

Excitation: 10v

Output Voltage: 30 mv F.S. ±10% at 75°F

Frequency Response: 1000 Hz

Acceleration: 50 g, 200 to 3000 Hz

Accleration Effect:
less than 0.1% F.S./50 g or 0.002% F.S./1 g

Shock: 1000 g (1 ms duration with no damage)

Note:

Complete details may be obtained from:
Technology Utilization Officer
Marshall Space Flight Center
Huntsville, Alabama 35812
Reference: B68-10262

Patent status:

Inquiries about obtaining rights for the commercial use of this invention may be made to NASA, Code GP, Washington, D. C. 20546.

Source: R. Bowman, J. Burns, and W. McLellan
of Electro-Optical Systems, Inc.
under contract to
Marshall Space Flight Center
(MFS-14703)

Category 01

This document was prepared under the sponsorship of the National Aeronautics and Space Administration. Neither the United States Government nor any person acting on behalf of the United States Government assumes any liability resulting from the use of the information contained in this document, or warrants that such use will be free from privately owned rights.

NASA TECH BRIEF

NASA Tech Briefs are issued to summarize specific innovations derived from the U.S. space program, to encourage their commercial application. Copies are available to the public at 15 cents each from the Clearinghouse for Federal Scientific and Technical Information, Springfield, Virginia 22151.

Improved Fuel-Cell-Type Hydrogen Sensor

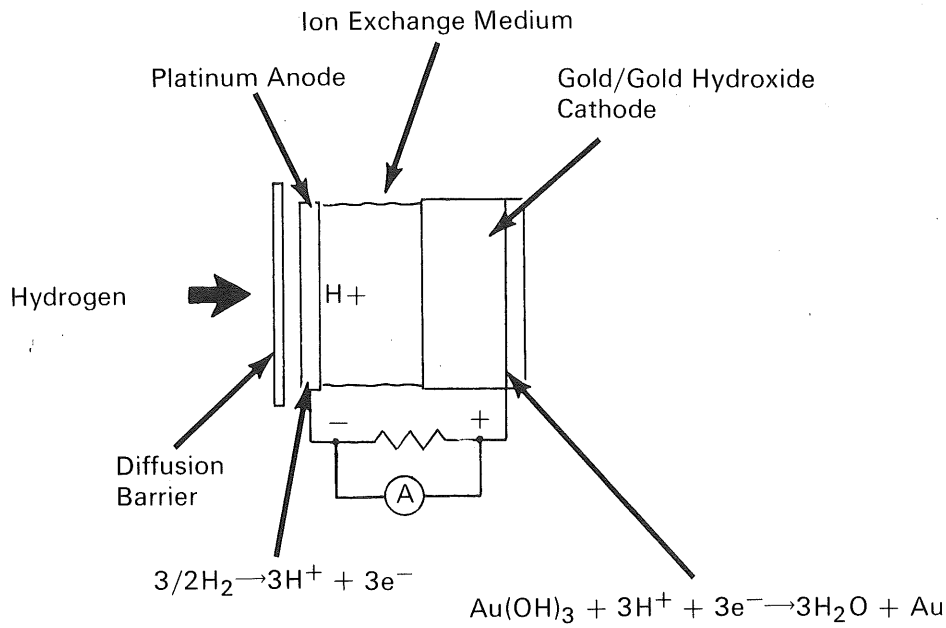

The conventional hydrogen sensor based on the fuel cell principle requires a continuous supply of gaseous oxygen to the cathode. This need for gaseous oxygen is eliminated in a modified hydrogen sensor by replacing the oxygen cathode with a cathode consisting of a sealed paste of gold hydroxide ($Au(OH)_3$) and a pure gold (Au) current collector. The net reaction which occurs during cell operation is the reduction of the gold hydroxide to gold and water, with a half-cell potential of 1.4 volts. Ionic reactions at the electrodes are shown in the sketch.

As in the case of the conventional sensor cell, the improved cell includes a polymer diffusion barrier for the hydrogen, an ion exchange medium, and an external circuit. The current appearing in the external circuit is directly proportional to the partial pressure of the hydrogen gas at the diffusion barrier.

Advantages of the improved hydrogen sensor are:

1. A supply of oxygen gas is eliminated, thereby making the sensor considerably lighter, smaller, and less costly.
2. Sensor fabrication is simplified, since the gold hydroxide electrode is not dependent on a multiphase catalyst interface required with the oxygen electrode.
3. A low stoichiometric mass of gold hydroxide is required to sustain sensor operation.

(continued overleaf)

This document was prepared under the sponsorship of the National Aeronautics and Space Administration. Neither the United States Government nor any person acting on behalf of the United States Government assumes any liability resulting from the use of the information contained in this document, or warrants that such use will be free from privately owned rights.

4. The high half-cell potential of the cathode prevents reversal from oxygen-containing diluents, thereby enabling measurement of hydrogen partial pressures independently of the diluent.

Note:

Complete details may be obtained from:

Technology Utilization Officer
Marshall Space Flight Center
Huntsville, Alabama 35812
Reference: B68-10263

Patent status:

Inquiries about obtaining rights for the commercial use of this invention may be made to NASA, Code GP, Washington, D.C. 20546.

Source: M. D. Rutkowski and F. P. Rudek
of General Electric Company
under contract to
Marshall Space Flight Center
(MFS-14656)

NASA TECH BRIEF

NASA Tech Briefs are issued to summarize specific innovations derived from the U.S. space program, to encourage their commercial application. Copies are available to the public at 15 cents each from the Clearinghouse for Federal Scientific and Technical Information, Springfield, Virginia 22151.

Conceptual Dead Weight Device To Provide Pressure Calibration

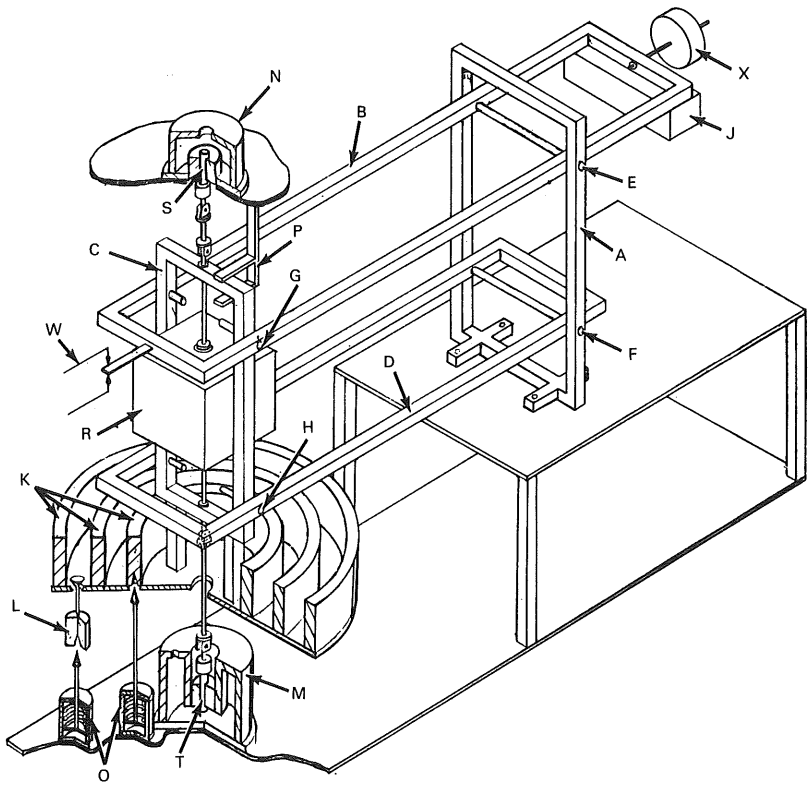

The problem:

To develop a pressure calibration system capable of setting accurate pressures in either absolute or gage ranges.

The solution:

A dead weight testing device, using a common force plane piston manometer to set accurate gage pressures in pounds per square inch. An additional piston gage easily adapts the device for absolute pressure calibration.

How it's done:

The basic device, shown in the figure, is a cantilever system, formed by four cast aluminum structures A, B, C, and D. Structure A, externally supported, is connected to B, C, and D by pivot devices (E, F, G, and H). Structures B, C, and D rotate in a small arc

(continued overleaf)

This document was prepared under the sponsorship of the National Aeronautics and Space Administration. Neither the United States Government nor any person acting on behalf of the United States Government assumes any liability resulting from the use of the information contained in this document, or warrants that such use will be free from privately owned rights.

about the pivots in A so that a parallelogram configuration is constantly retained. A set of mechanical stops (P) limits the rotation to approximately one-half inch. Structure B, the lever arm, has a rigid weight (J) and an adjustable counterweight (X) at one end, and a zero referencing assembly (W) at the other.

Structure C contains an electric motor R which, through reduction gear trains, rotates two universal-jointed shafts. These shafts rotate precise area pistons (S and T) in the absolute pressure assembly (N) and gage pressure assembly (M). Attached to a lower extension of structure C is a circular aluminum plate, upon which dead weights K and L are placed or removed by a system of air-controlled lifting devices (O).

In operation of the device, all weights are first removed from the circular plate by the lifting devices. The tare weight or tare pressure in the system is eliminated by adjusting the counterweight until a zero reference is established.

The dead weights are then initially placed on the circular plate. This load, however, is not sensed by the system for the lower mechanical stop prevents the device from rotating with this addition.

To obtain a gage pressure reading, air pressure is applied to the gage pressure assembly. This causes an upward force on the piston gage T, which in turn exerts a force on the thrust bearing of structure C. When the force is sufficient to overcome the dead weight, structure C moves off the mechanical stop. An accurate gage pressure reading is provided at the zero reference by a servo-controlled metering of the pressure to the gage pressure assembly.

To obtain a reading in pounds per square inch absolute, a vacuum is attached to the absolute pressure assembly. The vacuum acts against piston gage S to remove the atmospheric pressure value from the dead weights. The reading is then taken from the zero reference.

Notes:

1. This unique calibration device uses the basic principles of a primary standard, is relatively maintenance free, and is accurate to 0.05%. It is capable of calibrating more than one item during a calibration sequence, is designed to reduce space requirements, and can be used with an automatic readout system.
2. This information should be of interest to manufacturers and users of pressure gages in a variety of fields.
3. Inquiries concerning this innovation may be directed to:

   Technology Utilization Officer
   Marshall Space Flight Center
   Huntsville, Alabama 35812
   Reference: B68-10264

Patent status:

No patent action is contemplated by NASA.

Source: G. Olson and G. Karcher
of the Chrysler Corporation
under contract to
Marshall Space Flight Center
(MFS-14672)

AEC-NASA TECH BRIEF

AEC-NASA Tech Briefs describe innovations resulting from the research and development program of the U.S. AEC or from AEC-NASA interagency efforts. They are issued to encourage commercial application. Tech Briefs are published by NASA and may be purchased, at 15 cents each, from the Clearinghouse for Federal Scientific and Technical Information, Springfield, Virginia 22151.

Moebius Resistor Is Noninductive and Nonreactive

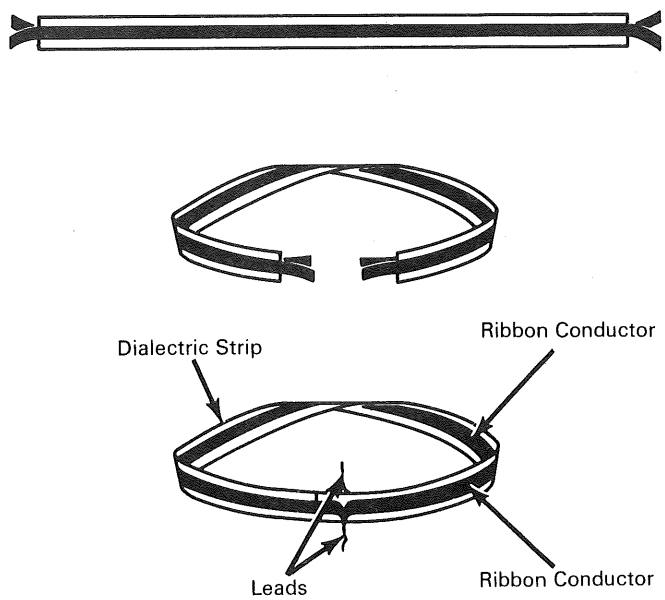

The problem:

To develop an electrical resistor that has no residual mutual- or self-inductance and is nonreactive at high frequencies.

The solution:

A Moebius strip made of insulated resistive materials with electrical leads attached directly opposite one another provides a noninductive, nonreactive resistor which is simple, inexpensive, and flexible in usage, and can be made to almost any desired size and shape.

How it's done:

Two ribbon conductors of equal length are affixed on opposite sides of a strip of dielectric. The assembly is then given a single twist and the ends are joined to form a Moebius surface. The ends of the conductors are soldered together and the resistor terminals are attached to the directly opposed solder joints. Current applied to the terminals will travel in opposite directions, so that the electromagnetic fields cancel each other, resulting in an essentially noninductive, nonreactive resistor with a low time constant. Bifilar wire may be used instead of resistive ribbon, eliminating the need for a center dielectric strip. Thin film conductors on flat substrates can also be used to make Moebius resistors.

Two or more sets of resistive wire may be mounted laterally on the same nonconductive strip, with about 1/16-inch spacing, and connected to form multi-Moebius resistors in one unit. There is no change in the

(continued overleaf)

This document was prepared under the sponsorship of the Atomic Energy Commission and/or the National Aeronautics and Space Administration. Neither the United States Government nor any person acting on behalf of the United States Government assumes any liability resulting from the use of the information contained in this document, or warrants that the use of any information, apparatus, method, or process disclosed in this document may not infringe privately owned rights.

time-constant of the individual resistors, nor does one in any way affect the operation of the others, even when they are assembled in parallel or in series.

The performance of the Moebius resistor is unaffected by its form, size, or length. Once it is connected into a Moebius shape, it can be folded or wound around a cylindrical core or a card, or even into a ball, resulting in compact packaging of the resistor for use in miniaturized circuits. The Moebius resistor does not couple to metallic objects, external fields, or itself. When the bridge is nulled the resistor can be handled or changed in form without disturbing the balance. The conductors must not be touched and the spacing between them must not be altered.

Inductance and reactance are virtually eliminated in this resistor because the Moebius strip is topologically a single-sided surface. The pulse divides at the terminals equally, since the impedance is the same in both directions. One pulse travels with a right-handed orientation and the other opposite to it in all respects; therefore, the pulses do not cancel. The polarity is reversed when the pulses have traveled one-half the resistor's length where the DC resistance is one-half the total value. At this point, the potentials of the separated pulses are equal and of opposite phase. They continue until they reach the terminals again where they have decreased to zero. As with other resistors, the Moebius resistor uses the entire conductor length to dissipate the pulse energy; however, the dielectric of the Moebius resistor is used more efficiently, since two equal pulses travel throughout its volume between the conductors.

Notes:

1. If the terminals are not directly opposed, the resistor becomes inductive, with maximum inductance when the terminals are separated by one-half the length of the loop.
2. Inquiries concerning this innovation may be directed to:

   Sandia Office of Industrial Cooperation
   Org. 3413
   Sandia Corporation
   Post Office Box 5800
   Albuquerque, New Mexico 87115
   Reference: B68-10267

Patent status:

Inquiries about obtaining rights for commercial use of this innovation may be made to:

Mr. Dudley W. King, Chief
Albuquerque Patent Group
U.S. Atomic Energy Commission
Post Office Box 5400
Albuquerque, New Mexico 87115

Source: R. L. Davis
(SAN-10020)

NASA TECH BRIEF

NASA Tech Briefs are issued to summarize specific innovations derived from the U.S. space program, to encourage their commercial application. Copies are available to the public at 15 cents each from the Clearinghouse for Federal Scientific and Technical Information, Springfield, Virginia 22151.

Vibration Testing and Dynamic Studies of Relays

A study has been undertaken to determine the separation criteria for a preloaded, idealized set of contacts when they are subjected to a steady-state sinusoidal excitation and when the elasticity of one contact is nonlinear. The study consists of two phases; theoretical and experimental.

The set of contacts is taken as a two-mass, two-spring system with one nonlinear spring of the Duffing hardening type. With arbitrary system parameters, such a system represents a variety of contact configurations. A linear system is represented by the special case where the nonlinear coefficient becomes zero.

The contact set is idealized by assuming lumped parameters; that is, massless springs and springless masses. The contact preload is assumed without regard to its origin.

Separation criteria are determined for the contact set under the assumption of negligible damping. The point of impending contact separation is a point of transition from a single degree-of-freedom system to a two degree-of-freedom system. Consequently, it is only necessary to consider the single degree-of-freedom system in determining the separation criteria.

Scope of the theoretical study includes the development of the equations of motion of the system; the development of the mathematical model for impending separation of the contacts; a qualitative analysis of system response; and the solution of the mathematical model for impending separation in terms of system parameters and preload.

The scope of the experimental study includes the design and construction of a large scale model of the contactor system; instrumentation of the model; testing of selected theoretical separation criteria; and investigation of system response within the unstable response regions.

Note:

Copies of a complete report on this study are available from:

Technology Utilization Officer
Marshall Space Flight Center
Huntsville, Alabama 35812
Reference: B68-10268

Patent status:

No patent action is contemplated by NASA.

Source: Oklahoma State University
under contract to
Marshall Space Flight Center
(MFS-14542)

Category 01

This document was prepared under the sponsorship of the National Aeronautics and Space Administration. Neither the United States Government nor any person acting on behalf of the United States Government assumes any liability resulting from the use of the information contained in this document, or warrants that such use will be free from privately owned rights.

AEC-NASA TECH BRIEF

AEC-NASA Tech Briefs describe innovations resulting from the research and development program of the U.S. AEC or from AEC-NASA interagency efforts. They are issued to encourage commercial application. Tech Briefs are published by NASA and may be purchased, at 15 cents each, from the Clearinghouse for Federal Scientific and Technical Information, Springfield, Virginia 22151.

Low Energy Ohmmeter Can Be Used To Test Sensitive Circuits, Other Meters

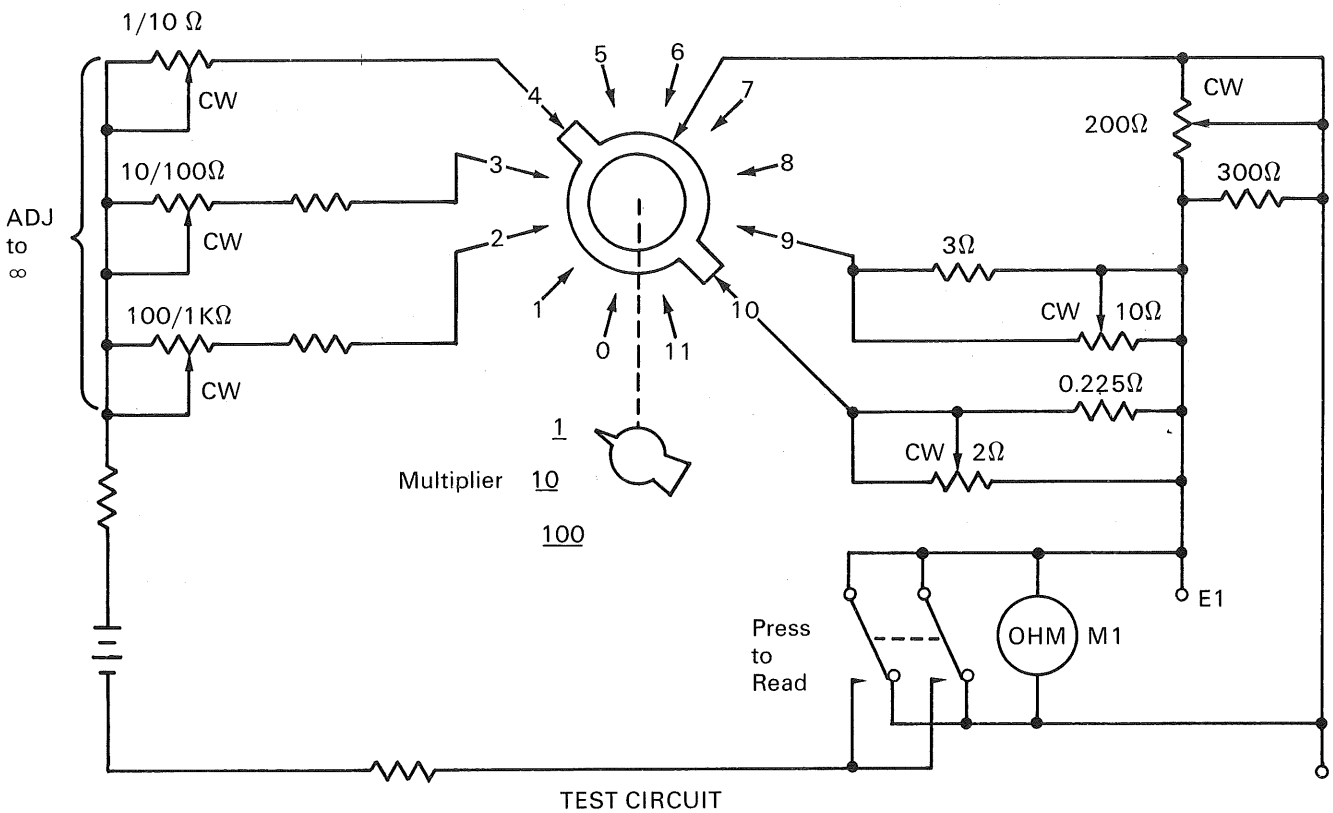

The problem:

To develop an ohmmeter of sufficiently low energy output that it may be used to test extremely sensitive circuits (such as explosive switches or other meters) safely, reliably, and accurately.

The solution:

A hazardous circuit ohmmeter measures resistance from 0.01 to 500 ohms on three ranges with an energy level of 31.25 microwatts delivered to the external circuit when a 0.2 ohm resistance is measured on the 1× range. The energy is lower for all other measurements by a factor of the range multiplier on the other ranges.

How it's done:

A 1.34-volt mercury cell provides the power for the test circuit, shown in the schematic. The possibility of damage to the item being tested from overvoltage or

(continued overleaf)

This document was prepared under the sponsorship of the Atomic Energy Commission and/or the National Aeronautics and Space Administration. Neither the United States Government nor any person acting on behalf of the United States Government assumes any liability resulting from the use of the information contained in this document, or warrants that the use of any information, apparatus, method, or process disclosed in this document may not infringe privately owned rights.

overcurrent as a result of component failure is minimized in two ways: (1) limiting resistors are installed in the circuit at each end of the cell, and (2) the meter, which is connected directly to the ohmmeter terminals, is paralleled by at least two resistors. The test circuit for each range is a resistance network which, including the resistance of the meter, is equal to the center scale value. A rheostat is provided in each network so that it may be adjusted precisely to that value for each of the three ranges. The battery also has a rheostat in the circuit which permits the current to be set for full-scale deflection of the meter for each range. The three ranges, times 1, times 10, and times 100, are selected by changing the resistance network, including the resistance of the meter, by the factor of the multiplier and increasing the control resistance to provide full-scale deflection of the meter.

The safety of the design is ensured by two or more resistors on all series and parallel resistor circuits to preclude the danger of short circuit failure. The coil of the meter is in parallel to avoid the possibility of excessive voltage being applied to the terminals because of an open resistor. Since the meter is connected directly to the terminals of the ohmmeter, a check for "set to infinity" performed before each test will indicate any component failure before the unit is connected to the unknown resistance. Therefore, the only hazard is failure of a component between the set-to-infinity check and the actual test.

Reliability is achieved by using a ruggedized, taut band meter and packaging the assembly in a shock-absorbing carrying case to protect it against vibration, shock, dust, and moisture. In addition, all components except the meter are operated at less than 25 percent of their rating. The set-to-infinity check verifies reliability because failure of any component will make it impossible to adjust to infinity.

A 2-percent meter with 0.5-percent scale linearity and an ohmmeter scale can be tested for accuracy with a scale calibration chart. The network rheostat assures further accuracy. Additional information, including maximum and typical error charts, are available from Sandia Corporation.

Notes:

1. A polyurethane-foam-lined aluminum case provides protection for the unit assembly. Its dimensions are approximately 9 by 13 by 7 inches, and its weight is about 12 pounds.
2. The highest currents on the three ranges with a 5-millivolt meter and a low range resistance of 0.2 ohm at midscale are 25 milliamps on the 1× range, 2.5 milliamps on the 10× range, and 0.25 milliamp on the 100× range, all delivered at zero ohms. The highest voltage delivered to the external circuit is 5 millivolts at infinity on any range.
3. Inquiries concerning this innovation may be directed to:

   Sandia Office of Industrial Cooperation
   Org. 3413
   Sandia Corporation
   Post Office Box 5800
   Albuquerque, New Mexico 87115
   Reference: B68-10269

Patent status:

No patent action is contemplated by AEC or NASA.

Source: Laurence W. Platt
(SAN-10013)

NASA TECH BRIEF

NASA Tech Briefs are issued to summarize specific innovations derived from the U.S. space program, to encourage their commercial application. Copies are available to the public at 15 cents each from the Clearinghouse for Federal Scientific and Technical Information, Springfield, Virginia 22151.

Noise Figure Measurement Concept for Acoustic Amplifiers

A concept has been reported for measuring the noise figure for acoustic amplifiers in a very direct and revealing manner. The report also suggests some of the physical conditions necessary for long-term acoustic memory devices.

The method incorporates the design of optimum-length buffer crystals used in conjunction with an amplifier section whose gain is equal to total structure loss. A signal can thus be admitted at the input and reflected back and forth in the circuit, being amplified each time it passes through the amplifier section, until it is lost in the increasing system noise. Measuring the time required to saturate the signal with noise should give a direct measurement of the amplifier noise figure.

Notes:

1. This method is intended to give a direct measure of the acoustic amplifier alone rather than the sum of various circuit noise figures.
2. The report delves mathematically into the major theoretical considerations and should be useful as a laboratory aid in the study of acoustic amplification.
3. This development is in conceptual stage only, and, as of date of publication of this Tech Brief, neither a model nor prototype has been constructed.

Patent status:

No patent action is contemplated by NASA.

Source: V. R. Johnson and J. R. Yeager
of Microwave Electronics
under contract to
Goddard Space Flight Center
(GSC-10066)

Category 01

This document was prepared under the sponsorship of the National Aeronautics and Space Administration. Neither the United States Government nor any person acting on behalf of the United States Government assumes any liability resulting from the use of the information contained in this document, or warrants that such use will be free from privately owned rights.

NASA TECH BRIEF

NASA Tech Briefs are issued to summarize specific innovations derived from the U.S. space program, to encourage their commercial application. Copies are available to the public at 15 cents each from the Clearinghouse for Federal Scientific and Technical Information, Springfield, Virginia 22151.

Recharge Unit Provides for Optimum Recharging of Battery Cells

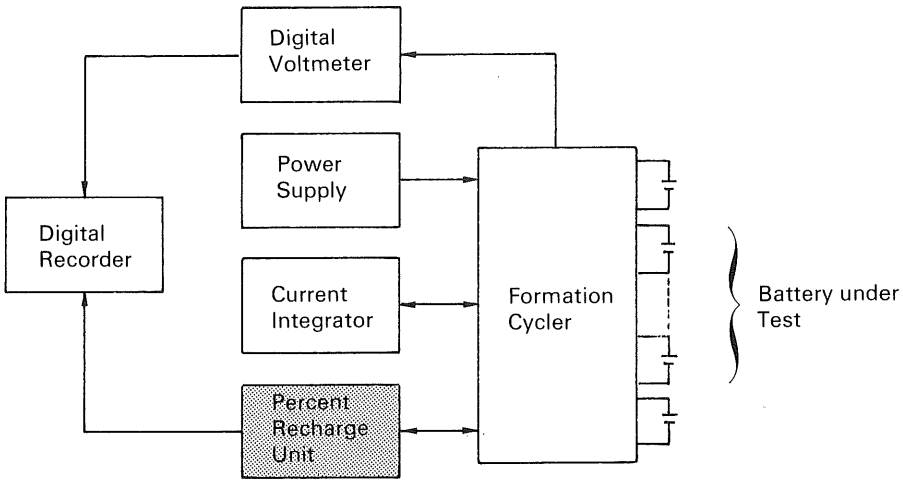

Since the voltage slope of a rechargeable battery is very small near the upper preset voltage limit, voltage sensing is not the ideal way of determining when charging of individual cells in the battery should be cut off. A "percent recharge unit," which has been developed, permits each cell of a rechargeable battery to be charged to a preset percentage value of the discharge ampere-hour capacity of the cell. This preset percentage value is set on the front panel and has a range of 100 percent to 199 percent in 1-percent increments. This unit operates in conjunction with an automatic formation cycler, a current integrator, a digital recorder, a digital voltmeter, and a power supply for battery charging. The entire system automatically monitors and controls a rechargeable battery subjected to charge–discharge cycling tests. Without the percent recharge unit in the system, the formation cycler would monitor the voltage of each cell in the battery and automatically remove a cell from the battery when its voltage reached an upper preset limit during charge or a lower preset limit during discharge.

With the percent recharge unit in the system, the process begins by connecting a fully charged battery (containing up to 20 cells) to the formation cycler. The fully charged battery is discharged into an internal load in the formation cycler, with the current time integrator monitoring the ampere-hour discharge capacity. During this discharge mode, pulses which are generated by the current integrator are counted by 20 discharge counters located within the percent recharge unit. Each cell of the battery has its own discharge counter. When a cell is removed from the battery by the formation cycler because of a low preset voltage limit, the cell control relay located in the formation cycler applies an inhibit level to the cell counter gate, preventing the integrator pulses from being applied to the discharge counter representing that cell. Therefore, at the end of the battery discharge cycle the digital information stored in each of the 20 discharge counters represents the discharge

(continued overleaf)

This document was prepared under the sponsorship of the National Aeronautics and Space Administration. Neither the United States Government nor any person acting on behalf of the United States Government assumes any liability resulting from the use of the information contained in this document, or warrants that such use will be free from privately owned rights.

ampere-hour capacity of each of the corresponding battery cells.

During the battery charge mode, pulses from the current integrator are applied to a single charge counter within the percent recharge unit. Therefore, the digital information in this charge counter represents the ampere-hour charge applied to the battery. The percent recharge unit sequentially multiplies the ampere-hour discharge capacity stored in each cell counter by the percentage value set on the front panel and compares this product to the ampere-hour value accumulated in the charge counter. If this product is equal to or less than the value in the charge counter, a signal is sent to the formation cycler which causes it to bypass that cell. Cell identification, voltage, and ampere-hour capacity are recorded by the printer each time a cell is removed from the battery.

Note:

Complete details may be obtained from:

Technology Utilization Officer
Goddard Space Flight Center
Greenbelt, Maryland 20771
Reference: B68-10273

Patent status:

No patent action is contemplated by NASA

Source: D. Baer and F. E. Ford
(GSC-10688)

AEC-NASA TECH BRIEF

AEC-NASA Tech Briefs describe innovations resulting from the research and development program of the U.S. AEC or from AEC-NASA interagency efforts. They are issued to encourage commercial application. Tech Briefs are published by NASA and may be purchased, at 15 cents each, from the Clearinghouse for Federal Scientific and Technical Information, Springfield, Virginia 22151.

High-Voltage Pulse Generator Develped for Wide-Gap Spark Chambers

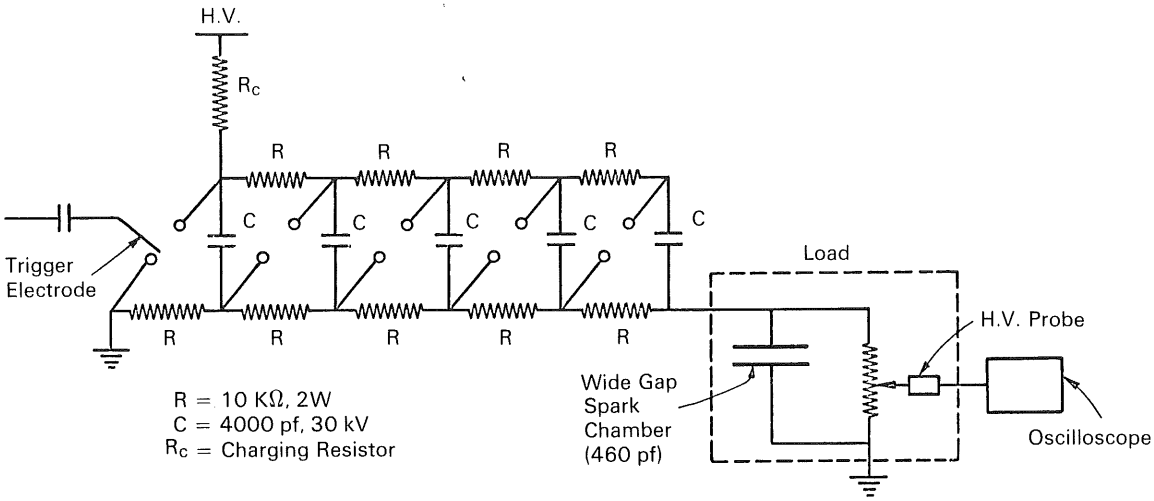

The problem:

To design a high-voltage pulse generator capable of producing a rapidly-rising 100 kv pulse. Prior techniques for generating high-voltage pulses as used in high-precision, wide-gap spark chambers have slow rise times, require large internal inductances, and produce excessive external electromagnetic radiation.

The solution:

A low-inductance, high-capacitance Marx pulse generator using a coaxial configuration that produces a 2.5 ns rise time, 100 kv pulse across a purely resistive load. The generator design and coaxial configuration provides for minimization of internal inductance and suppression of external electromagnetic radiation.

How it's done:

The Marx pulser employs capacitor parallel-charging, series-discharging principles to obtain voltage multiplication. A spark-gap chamber provides a series capacitor discharge path upon triggering the spontaneous breakdown threshold of the first gap.

The spark gaps of the generator are enclosed in a pressurized nitrogen atmosphere which allows the charging voltage to be varied by changing the nitrogen pressure. The inner wall of the pressure vessel is painted with a white reflective coating, providing an optical path to permit the unfired gaps to be irradiated with ultraviolet light from the fired gaps. The capacitors are barium titanate cylinders with silver plated ends and the electrodes are polished brass hemispheres 11 mm in diameter. To insure that the operating voltage can be set near the spontaneous breakdown threshold of the first gap, the gap is adjusted so that it breaks down at a slightly lower voltage than the other gaps.

Notes:

1. This information should be of interest to persons in the field of electromagnetic pulse studies or simulation and flash X-ray generation.

(continued overleaf)

This document was prepared under the sponsorship of the Atomic Energy Commission and/or the National Aeronautics and Space Administration. Neither the United States Government nor any person acting on behalf of the United States Government assumes any liability resulting from the use of the information contained in this document, or warrants that the use of any information, apparatus, method, or process disclosed in this document may not infringe privately owned rights.

2. Additional details are contained in "A Simple Marx High Voltage Pulse Generator for Wide Gap Spark Chambers," by L. P. Keller and E. G. Walschon, Argonne National Laboratory, published in *Review of Scientific Instruments,* (1966) vol. 37, p. 1258–1259.
3. Inquiries concerning this innovation may be directed to:

   Office of Industrial Cooperation
   Argonne National Laboratory
   9700 South Cass Avenue
   Argonne, Illinois 60439
   Reference: B68-10283

Source: L. P. Keller
and E. G. Walschon
High Energy Physics Division
(ARG-10136)

Patent status:

Inquiries about obtaining rights for commercial use of this innovation may be made to:

Mr. George H. Lee, Chief
Chicago Patent Group
U.S. Atomic Energy Commission
Chicago Operations Office
9800 South Cass Avenue
Argonne, Illinois 60439

NASA TECH BRIEF

NASA Tech Briefs are issued to summarize specific innovations derived from the U.S. space program, to encourage their commercial application. Copies are available to the public at 15 cents each from the Clearinghouse for Federal Scientific and Technical Information, Springfield, Virginia 22151.

Deep Space FM System, A Concept

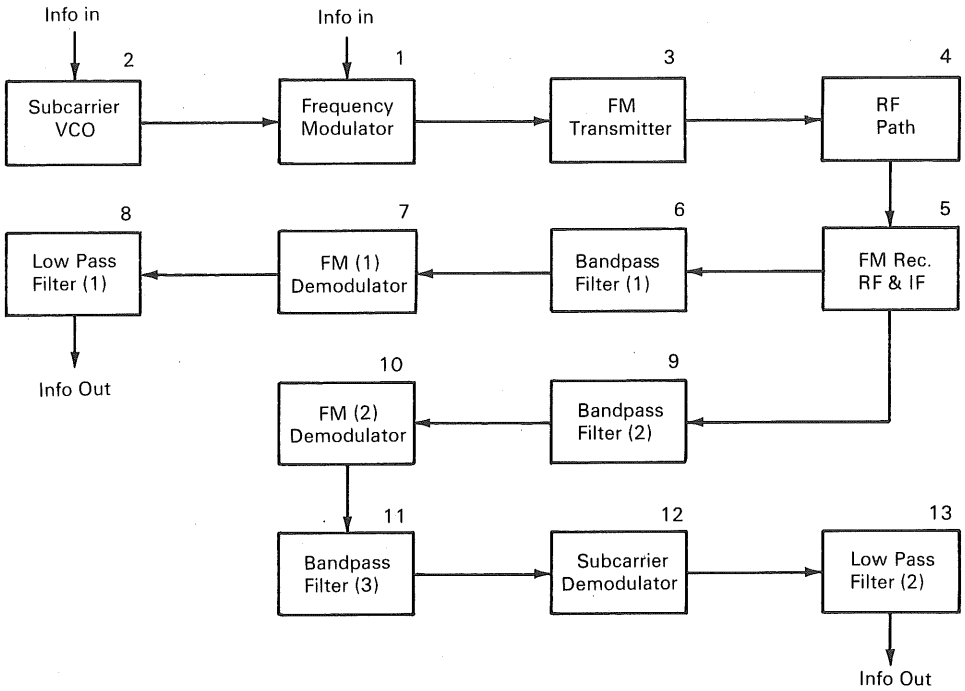

In the diagram, item 1 is a frequency modulator which is modulated by a baseband information signal. It is also modulated by a subcarrier from the subcarrier's voltage controlled oscillator (VCO), shown as item 2. This VCO is also modulated by an information signal. The frequency modulated signal from item 1 is transmitted by the fm transmitter, item 3. The rf path, item 4, consists of the transmitting antenna cable, transmitting antenna, free space, receiving antenna, and receiving antenna cable. This portion of the system is quite conventional. However, the information bandwidth and subcarrier frequency must be selected so as to provide frequency separation at the receiving terminal.

Item 5 is a portion of the fm receiver consisting of the rf and i.f. sections. The rf and i.f. bandwidth must be sufficiently wide to pass the normal spectrum for the signal transmitted. The fm demodulators are not included in item 5. Item 6 is a bandpass filter, #1.

The predetection bandwidth for most systems is taken to be equal to twice the sum of the deviation and the highest modulating frequency. For some systems, the predetection bandwidth may be reduced to equal twice the highest modulating frequency or twice the frequency deviation whichever is larger. In this system the bandpass filter #1, is made substantially less. It is less than twice the modulating frequency and is also less than twice the deviation. For

(continued overleaf)

This document was prepared under the sponsorship of the National Aeronautics and Space Administration. Neither the United States Government nor any person acting on behalf of the United States Government assumes any liability resulting from the use of the information contained in this document, or warrants that such use will be free from privately owned rights.

example, a 1 MHz signal may be used for the subcarrier frequency and the total deviation may also be as high as 1 MHz. While the bandpass filter #1, item 6, may be only 1 MHz wide, conventional design practice would require the filter to be 4 MHz. With a bandwidth only 1/4 normal bandwidth, the fm threshold will be 6 db lower, compared to conventional equipment. This will double the range and permit the operation with a signal 6 db weaker than normal.

Since the signal is deviated beyond the passband and also has frequency components well outside the bandlimits, this filter, item 6, will cause a loss in signal components. Specifically, the subcarrier components will be lost. The amount of energy outside the passband will be dependent upon the deviation of this subcarrier. If the deviation is ±600 kHz for example, there is only about 1 db energy outside of the passband as the deviation ratio is 0.6. To maintain the 6 db improvement in threshold, the noise bandwidth of the bandpass filter #1, item 6, must be reduced to 800 kHz. FM demodulator #1, item 7, is used to demodulate the baseband signal. The spectrum of the transmitted signal produced by the baseband modulation, with the subcarrier off, must be confined to the 800 kHz bandwidth. For the conditions specified in this example, the baseband signal will be demodulated by fm demodulator #1, item 7. The low pass filter #1, is used to limit the post detection bandwidth to that necessary for the information baseband being transmitted.

Since the information carried by the subcarrier is lost in the bandpass filter #1, it is necessary to provide another channel for this information. Bandpass filter #2 should be 4 MHz using conventional design practice but may be reduced some. The flat portion of the passband is required to be at least 2 MHz (for the example) so that the first order sidebands of the subcarrier are not suppressed. It also must be wider to pass the modulation components of the subcarrier.

When fm demodulator #1 is operated at the fm threshold, fm demodulator #2, item 10, will be operating below threshold. Consequently, noise spikes will be generated at fm demodulator #2, item 10. The output of fm demodulator #2 is fed to bandpass filter #3, item 11. Bandpass filter #3 is centered at the subcarrier frequency components of the modulated subcarrier. Therefore, it is considerably narrower than bandpass filter #2. Bandwidth reduction improves the signal-to-noise ratio so that the signal from bandpass filter #3, item 11, is above the threshold for the subcarrier demodulator, item 12. As long as the signal-to-noise ratio is adequate at the subcarrier demodulator, the information carried by the subcarrier can be satisfactorily recovered. The low pass filter #2, item 13, limits the output bandwidth to that required for the information transmitted using the subcarrier.

Notes:

1. This system would permit transmission of data where the deviation is greater than 1/2 the predetection bandwidth. It would provide satisfactory performance at greater distances or with lower signal levels than present systems.
2. This development is in conceptual stage only, and, as of date of publication of this Tech Brief, neither a model nor prototype has been constructed.

Patent status:

No patent action is contemplated by NASA.

Source: G. D. Doland
of Lockheed Electronics Company
under contract to
Manned Spacecraft Center
(MSC-11825)

NASA TECH BRIEF

NASA Tech Briefs are issued to summarize specific innovations derived from the U.S. space program, to encourage their commercial application. Copies are available to the public at 15 cents each from the Clearinghouse for Federal Scientific and Technical Information, Springfield, Virginia 22151.

Dynamic Linearity Measurement Technique

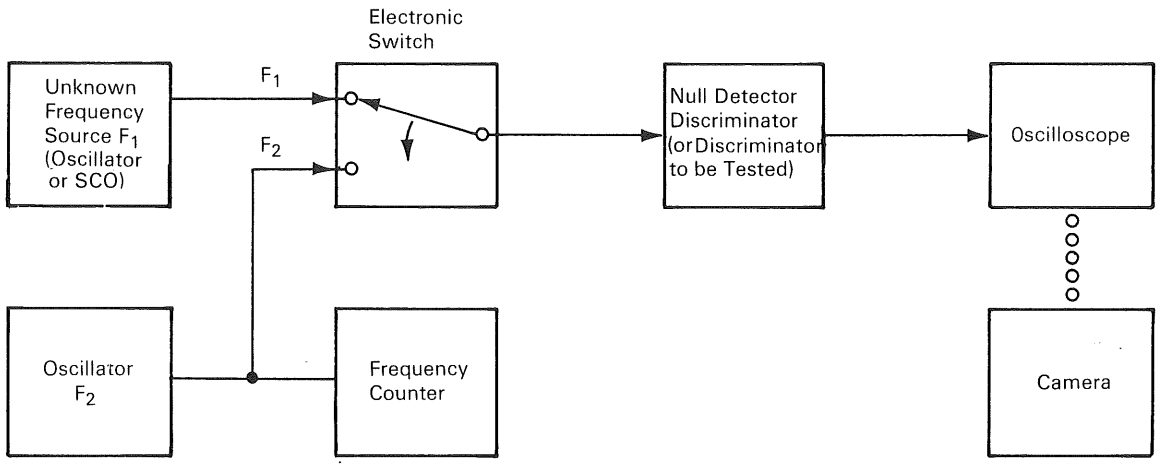

Static linearity of a frequency modulated (FM) subcarrier oscillator (SCO) and an FM discriminator is quite easily measured. There has been, however, no adequate method or technique that will independently measure the dynamic linearity of an FM SCO or discriminator. The basic problem is to measure a particular frequency that is not held constant over a specific time interval.

A technique has been devised that uses an FM discriminator as a high gain null detector to produce an error signal as two signals, one of known frequency, the other of unknown frequency, are electronically switched to the discriminator input. This analog error signal becomes zero when both input signal frequencies coincide.

Considering the figure, which shows the equipment and its arrangement, when both frequency sources are at the same frequency ($F_1 = F_2$), the net output from the discriminator will be zero. When the sources are at different frequencies ($F_1 \neq F_2$), a square wave will appear at the discriminator output, of amplitude directly proportional to the frequency difference ($F = F_2 - F_1$) of the two oscillators and of repetition rate directly proportional to the electronic switch speed. The amplitudes of the signal generator outputs are unimportant because of the broad limiting action of the discriminator. The discriminator is fully limiting with an output of 5 mv rms or greater.

Note:

Inquiries concerning this innovation may be directed to:

Technology Utilization Officer
Kennedy Space Center
Kennedy Space Center, Florida 32899
Reference: B68-10290

Patent status:

No patent action is contemplated by NASA.

Source: Karl Merz and Leon Morrell
of The Boeing Company
under contract to
Kennedy Space Center
(KSC-10186)

Category 01

This document was prepared under the sponsorship of the National Aeronautics and Space Administration. Neither the United States Government nor any person acting on behalf of the United States Government assumes any liability resulting from the use of the information contained in this document, or warrants that such use will be free from privately owned rights.

AEC-NASA TECH BRIEF

AEC-NASA Tech Briefs describe innovations resulting from the research and development program of the U.S. AEC or from AEC-NASA interagency efforts. They are issued to encourage commercial application. Tech Briefs are published by NASA and may be purchased, at 15 cents each, from the Clearinghouse for Federal Scientific and Technical Information, Springfield, Virginia 22151.

Crvogenic Liquid Level Measuring Probe

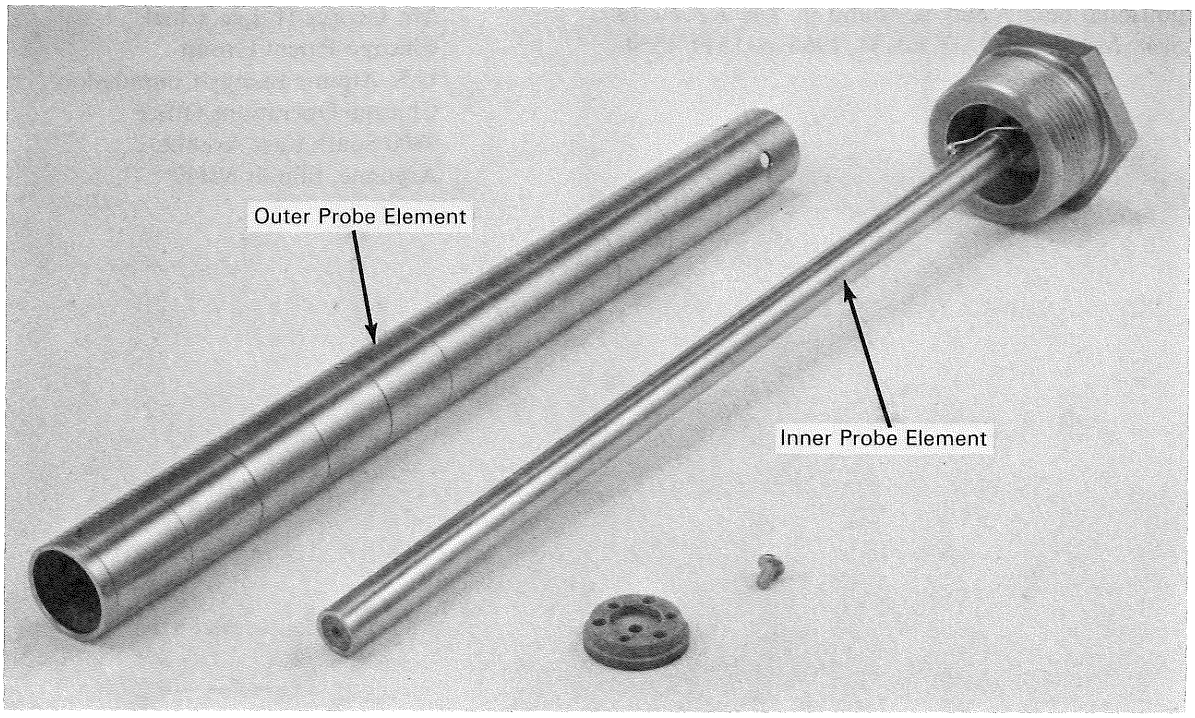

The problem:

To design a probe to measure the static and dynamic levels of cryogenic liquids in a hydrogen bubble chamber. The sensitive volume, pressure, and density of the liquid are dependent on the liquid height. The probe must be able to perform at −246°C with a short response time.

The solution:

A universal liquid level measuring probe, with a unique frequency discriminator, which provides continuous readings on the levels of nitrogen, hydrogen, or helium to an accuracy of ±1%. The probe has a dynamic response time of less than 150 μsec. allowing boiling conditions or other turbulence to be observed throughout all the transition stages.

How it's done:

The coaxial probe, immersed in the liquid, measures the difference in the dielectric constants between the liquid and gas phases of the media. The probe capacity is therefore a function of the height of the liquid within the probe elements. The probe and its associated cable constitute the capacity in the tuned circuit of an oscillator and a change in the liquid level is reflected as an oscillator frequency change.

(continued overleaf)

This document was prepared under the sponsorship of the Atomic Energy Commission and/or the National Aeronautics and Space Administration. Neither the United States Government nor any person acting on behalf of the United States Government assumes any liability resulting from the use of the information contained in this document, or warrants that the use of any information, apparatus, method, or process disclosed in this document may not infringe privately owned rights.

A unique feature of the probe is its frequency discriminator. A voltage controlled oscillator is phase-locked to the probe oscillator frequency. The error voltage required to tune the voltage controlled oscillator to the probe oscillator is then a function of the liquid level.

A percentage readout is used with the probe to provide a more efficient use of the instrument's dynamic range and to reduce operator error. In addition, the system may be used in a data logger to record liquid levels in a number of containers through a scanning operation.

Notes:

1. Results are available for a number of test measurements made with N_2 and He^4.
2. Additional details may be found in *The Review of Scient. Instrms.*, vol. 37, no. 11, 1966, p. 1549–1554.
3. Inquiries concerning this innovation may be directed to:

Office of Industrial Cooperation
Argonne National Laboratory
9700 South Cass Avenue
Argonne, Illinois 60439
Reference: B68-10291

Source: J. A. Dinkel,
Particle Accelerator Division
and C. R. Wegner,
High Energy Physics
(ARG-10138)

Patent status:

Inquiries about obtaining rights for commercial use of this innovation may be made to:

Mr. George H. Lee, Chief
Chicago Patent Group
U.S. Atomic Energy Commission
Chicago Operations Office
9800 South Cass Avenue
Argonne, Illinois 60439

NASA TECH BRIEF

NASA Tech Briefs are issued to summarize specific innovations derived from the U.S. space program, to encourage their commercial application. Copies are available to the public at 15 cents each from the Clearinghouse for Federal Scientific and Technical Information, Springfield, Virginia 22151.

Random Access–Random Release Relay Switching Matrix

An XY relay switching matrix has been designed to provide complete random access and random release of 400 points. It combines the best features of conventional switching matrices. The most outstanding features of the new system are its versatility and unique control circuitry.

Associated with each point of the 400 point XY relay switching matrix is a mercury-wetted bistable relay with independent set and reset coils. A relay is opened or closed by momentarily energizing its set or reset coil. The relays, commercially available components, are mounted in units of four on a printed circuit board. One hundred board assemblies, housed in a drawer, provide the 400 switching points. These points are opened or closed in any desired sequence without affecting other points. Operation of the matrix is performed by means of a desk keyboard.

The matrix incorporates a memory feature which, when used with various display/readout techniques, would permit additional switching capabilities, for example, presetting and programming. It is adaptable for remote programming of electronic and electromechanical switching and control systems.

Note:

Complete details may be obtained from:
Technology Utilization Officer
Marshall Space Flight Center
Huntsville, Alabama 35812
Reference: B68-10301

Patent status:

No patent action is contemplated by NASA.

Source: J. A. Carter and F. E. Evans
of North American Rockwell Corporation
under contract to
Marshall Space Flight Center
(MFS-12590)

Category 01

This document was prepared under the sponsorship of the National Aeronautics and Space Administration. Neither the United States Government nor any person acting on behalf of the United States Government assumes any liability resulting from the use of the information contained in this document, or warrants that such use will be free from privately owned rights.

NASA TECH BRIEF

NASA Tech Briefs are issued to summarize specific innovations derived from the U.S. space program, to encourage their commercial application. Copies are available to the public at 15 cents each from the Clearinghouse for Federal Scientific and Technical Information, Springfield, Virginia 22151.

Conceptual Apparatus for Detecting Leaks of Nonconductive Liquids

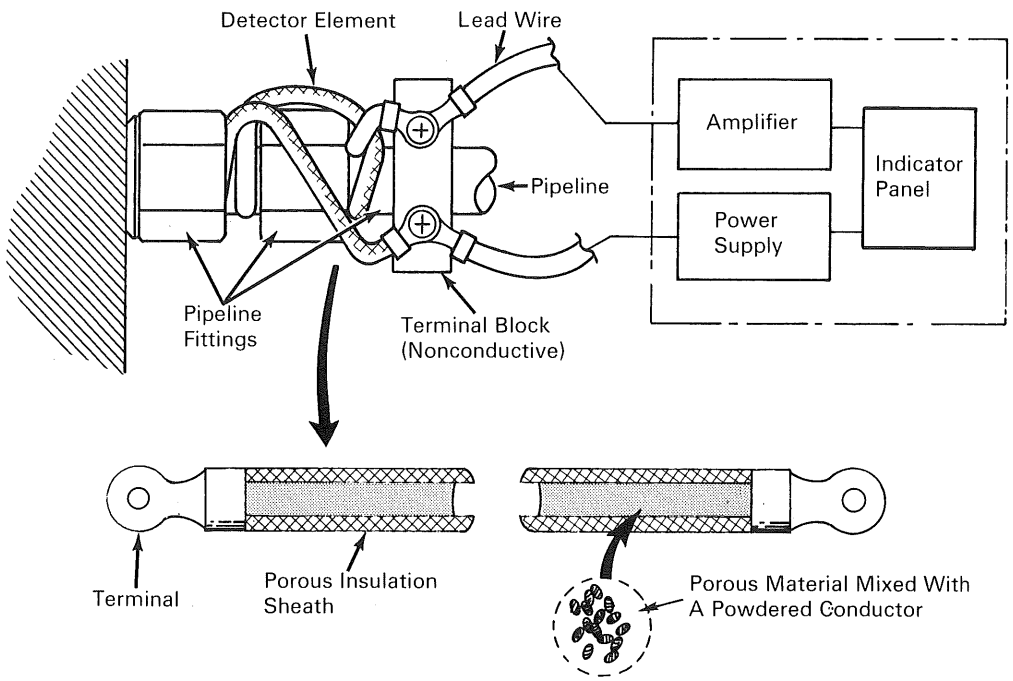

The illustration shows a conceptual apparatus for detecting leaks at joints in lines carrying electrically nonconductive liquids, such as oil in the pipelines of a hydraulic system. The proposed apparatus could include a panel that would give a visual or audible indication of a leak (to permit manual shutdown) and/or an electromechanical actuator that would automatically cut off the flow when a leak occurs at any of the monitored pipeline joints. The primary use of the detection apparatus would be in inaccessible areas where visual inspection for leaks would be difficult or impossible, such as in aircraft, ships, submarines, and industrial processing systems.

The leak detector element would consist of a porous insulation sheath containing a porous material (e.g., cellulose) admixed with an electrically conductive powder (copper, aluminum, or graphite). The mixture within the sheath would remain electrically conductive until an oil or other nonconductive liquid saturates the element at some section and breaks or appreciably reduces the conductive continuity of the element. As shown in the illustration, a detector element would be wrapped around pipeline connections where leaks could occur. Terminals attached to the detector element would be connected in series with an electrical power supply, an alarm, and a valve actuator to shut

(continued overleaf)

This document was prepared under the sponsorship of the National Aeronautics and Space Administration. Neither the United States Government nor any person acting on behalf of the United States Government assumes any liability resulting from the use of the information contained in this document, or warrants that such use will be free from privately owned rights.

off the flow of liquid when a leak is detected (within seconds from the time a leak appears).

Note:

This aparatus is presented as a concept only; neither a model nor a prototype has been built as of the date of this Tech Brief.

Patent status:

No patent action is contemplated by NASA.

Source: G. D. Walsh
of The Boeing Company
under contract to
Marshall Space Flight Center
(MFS-14713)

NASA TECH BRIEF

NASA Tech Briefs are issued to summarize specific innovations derived from the U.S. space program, to encourage their commercial application. Copies are available to the public at 15 cents each from the Clearinghouse for Federal Scientific and Technical Information, Springfield, Virginia 22151.

Current-Limiting Voltage Regulator

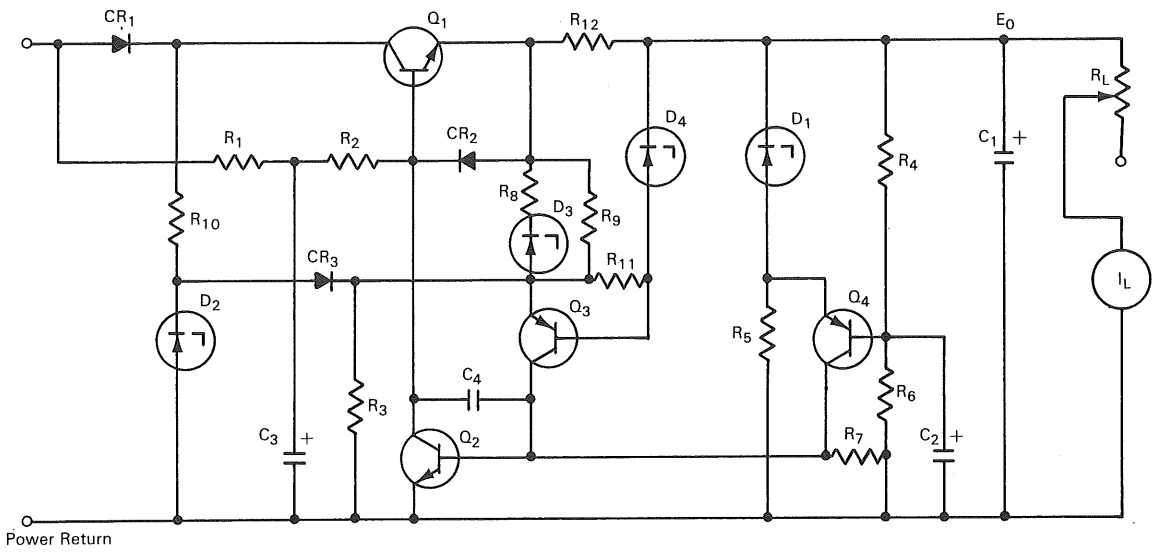

A voltage regulator has been designed to operate within preset current limits. The regulator acts as a circuit breaker to prevent overload failure and automatically resets when the overload is removed.

Normal voltage control is accomplished by the voltage sampling circuit consisting of Q_4 and associated components, R_4, R_6, C_2, R_7, R_5, and zener diode D_1. An increase in the output voltage (E_0) causes an increase in the current through Q_2 with subsequent starving of the base of Q_1. This results in an output voltage drop (E_0) to the level set by R_4.

Transistor Q_3 is the current-limiting control device. Current sampling resistor R_{12} controls the current available through D_4 to the base of Q_3. Zener diode D_4 is forward biased as a conventional diode except under very light load conditions. Q_3 exercises some control as an output voltage regulating element under normal operating conditions to supplement the action of Q_4. Current limiting level is adjusted by the choice of R_9. The combination of R_9 and R_3 sets the operating level at the emitter of Q_3 below current-limiting levels. Above the current-limiting level, the combination of R_9, R_{10}, and R_3 sets the voltage at the emitter of Q_3 so that, as Q_1 is shut off, excess power is dissipated in the parallel circuits of R_1, R_2, Q_2, and R_{10}, CR_3 and R_3.

The combination of R_8 and D_3 and the elements CR_2, R_{11}, and D_4 serve to provide temperature compensation. The remaining components are typical of series-type regulator circuits and do not deserve special mention.

(continued overleaf)

This document was prepared under the sponsorship of the National Aeronautics and Space Administration. Neither the United States Government nor any person acting on behalf of the United States Government assumes any liability resulting from the use of the information contained in this document, or warrants that such use will be free from privately owned rights.

Notes:

1. The important feature of this circuit is the power dissipated in the series transistor Q_1, which is approximately constant from normal load to short-circuit condition. In the conventional current-limiting approach, the power dissipation of Q_1 increases from normal load to short-circuit condition.
2. Details may be obtained from:

   Technology Utilization Officer
   Manned Spacecraft Center
   Houston, Texas 77058
   Reference: B68-10305

Patent status:

This invention is owned by NASA, and a patent application has been filed. Royalty-free, nonexclusive licenses for its commercial use will be granted by NASA. Inquiries concerning license rights should be made to NASA, Code GP, Washington, D.C. 20546.

Source: E. F. Cleveland
(MSC-11824)

NASA TECH BRIEF

NASA Tech Briefs are issued to summarize specific innovations derived from the U.S. space program, to encourage their commercial application. Copies are available to the public at 15 cents each from the Clearinghouse for Federal Scientific and Technical Information, Springfield, Virginia 22151.

Communication System Features
Dual Mode Range Acquisition Plus Time Delay Measurement

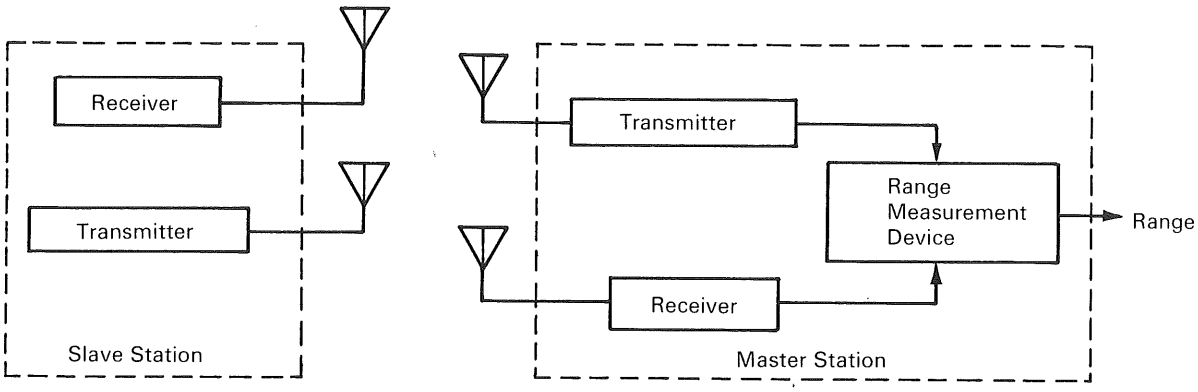

A communication system has been designed to overcome two very troublesome problems involved in following and measuring the movements of high velocity airborne or space probing vehicles.

The first involves target acquisition and breaks down to (1) providing a sufficient accuracy which requires a high bit rate resulting in a high doppler shift necessitating a small range cell per bit; and (2) adequate unambiguous range indications requiring a low word rate. This system automatically switches between a coarse range measurement or slow code acquisition mode and a tracking mode using combined low word rate signal and a high bit rate signal.

The range acquisition system uses a pseudonoise (PN) code to determine range. In range acquisition, the master station receiver first centers on a coarse quanta from the slave station transponder while simultaneously seeking to center on a fine quanta. Following coarse range acquisition, a dual mode is initiated using half-added coarse and fine quanta signals. The receiver then tracks range using the dual signals with a frequency-controlled oscillator to adjust fine range with detected coarse range. The coarse quanta is chosen so that doppler shift in the system is avoided. When synchronized, PN code generators are used to define the quanta in terms of elapsed time with selected units of the high speed signals being half-added with coarse quanta bits.

The second involves a time measurement system that reduces uncontrolled phase variations in the demodulated signal, usually attributable to temperature and other environmental fluctuations. The master station transmitter emits signals modulated by a PN code and the slave station transponder returns it to the master station receiver. A frequency controlled oscillator in this receiver is automatically adjusted to determine the time lag or delay, introduced into the modulation components, caused by the propagation time between the two stations, thereby indicating range or distance between the two stations. Typically, the master station transmitter supplies a reference signal to a range measurement device. The master station

(continued overleaf)

This document was prepared under the sponsorship of the National Aeronautics and Space Administration. Neither the United States Government nor any person acting on behalf of the United States Government assumes any liability resulting from the use of the information contained in this document, or warrants that such use will be free from privately owned rights.

receiver in turn sends its frequency-controlled oscillator signal as adjusted by the slave station transponder output signal to the same range measurement device. Here, the two signals are compared, the time difference between the reference signal and the frequency-controlled oscillator signal representing the time delay. In addition to propagation time, the total time delay includes delays introduced by the electronics, which, when known, are compensated for.

Notes:

1. The technique described may be found useful in police and other civil communications systems and by designers of avionics and commercial communications equipment.
2. Inquiries concerning this invention may be directed to:

   Technology Utilization Officer
   Marshall Space Flight Center
   Huntsville, Alabama 35812
   Reference: B68-10306

Patent status:

Title to this invention has been waived under the provisions of the National Aeronautics and Space Act [42 U.S.C. 2457 (f)], to Motorola, Inc., Scottsville, Arizona.

Source: Stanley W. Atwood,
Arthur W. Kline, Jr., and Neil E. Welter
of Motorola, Inc.
under contract to
Marshall Space Flight Center
(MFS-14323 & 14324)

NASA TECH BRIEF

NASA Tech Briefs are issued to summarize specific innovations derived from the U.S. space program, to encourage their commercial application. Copies are available to the public at 15 cents each from the Clearinghouse for Federal Scientific and Technical Information, Springfield, Virginia 22151.

Encapsulation Technique Eliminates Thermal Stresses in Welded Electronic Modules

The problem:

High stresses occur in encapsulated electronic components and welds which are subjected to temperature extremes.

The solution:

Apply first a coating of a thinned room-temperature-vulcanizing (RTV) silicone rubber having a high coefficient of expansion and the ability to remain flexible at extremely low temperatures and then an encapsulating epoxy resin having a relatively low coefficient of expansion (compared to other epoxies) as the encapsulating material. Thus, as the temperature decreases, the faster-shrinking RTV silicone rubber tends to provide room for the slower shrinking epoxy resin as it cools, and thus prevents possible damage to the components during temperature cycling. The RTV rubber is in a thin layer (0.002 inch) so that it does not create excessive stresses in the components. This encapsulation technique will minimize embedment and thermal stresses in welded electronic modules over the temperature range of −200° to +200°F.

Note:

A transducer for measuring embedment and thermal stresses in welded electronic modules is described in Tech Brief 67-10367. Inquiries may also be directed to:

Technology Utilization Officer
Marshall Space Flight Center
Huntsville, Alabama 35812
Reference: B68-10307

Patent status:

Inquiries about obtaining rights for the commercial use of this invention may be made to NASA, Code GP, Washington, D.C. 20546.

Source: M. Kimmel
of North American Rockwell Corporation
under contract to
Marshall Space Flight Center

(MFS-14581)

Category 01

This document was prepared under the sponsorship of the National Aeronautics and Space Administration. Neither the United States Government nor any person acting on behalf of the United States Government assumes any liability resulting from the use of the information contained in this document, or warrants that such use will be free from privately owned rights.

NASA TECH BRIEF

NASA Tech Briefs are issued to summarize specific innovations derived from the U.S. space program, to encourage their commercial application. Copies are available to the public at 15 cents each from the Clearinghouse for Federal Scientific and Technical Information, Springfield, Virginia 22151.

Solid State High-Voltage Pulser Operates with Low Supply Voltage

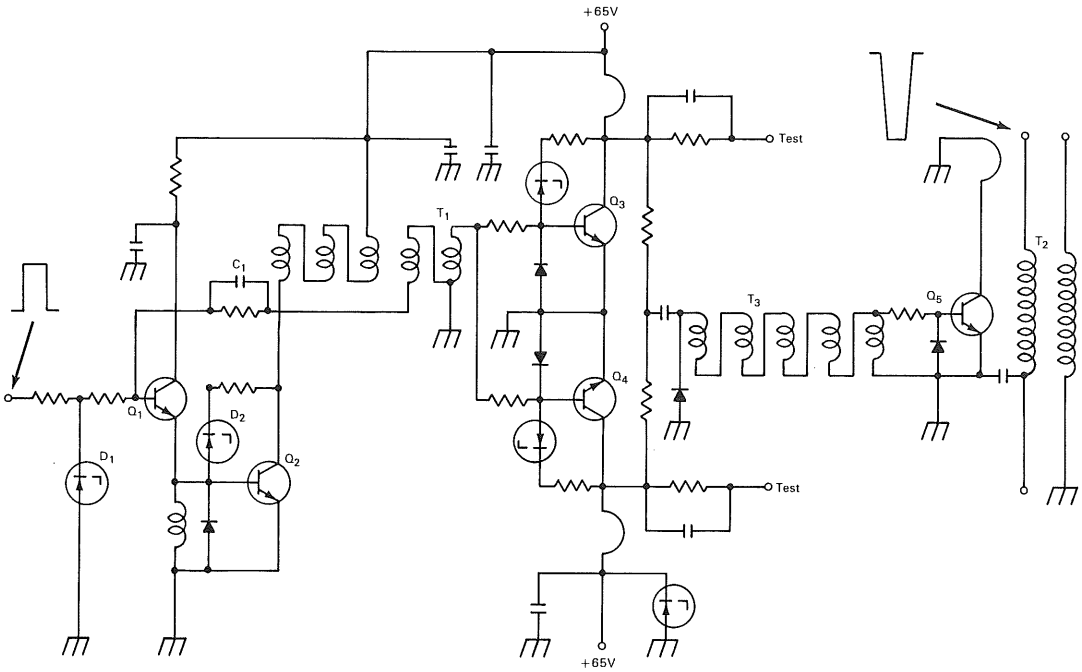

This solid state, high-speed circuit has been designed for application as a klystron cathode pulser. The circuit delivers 3-kilowatt, 3-kilovolt pulses from a bifilar filament transformer. Unlike most state-of-the-art pulsers, which require high supply voltages to generate high-voltage pulses, the new circuit requires only 65 volts to generate 3-kilovolt pulses. The circuit offers advantages in operational safety and reliability and in improved packaging design. Special components which make low-voltage operation possible are broadband video transformers. These transformers are wound in two configurations: (1) transmission line, multifilar toroids and (2) loop coupling toroids. Choice of core material for the transformers depends on pulse width and duty cycle requirements.

Operation of the klystron cathode pulser can be understood from the circuit diagram. Transistors Q_1 and Q_2 form a stabilized amplifier, providing a 15 dB power gain for the base drive requirements of transistors Q_3 and Q_4. Stabilization is achieved by negative feedback from one secondary of transformer T_1 to the summation point of the base of Q_1. Zener D_1

(continued overleaf)

This document was prepared under the sponsorship of the National Aeronautics and Space Administration. Neither the United States Government nor any person acting on behalf of the United States Government assumes any liability resulting from the use of the information contained in this document, or warrants that such use will be free from privately owned rights.

is incorporated in the signal input network of Q_1 to regulate the drive voltage. Zener D_2, connected between the base and collector of Q_2, is used to prevent the backswing of T_1 from exceeding the supply voltage. When such transients occur, the zener avalanche causes Q_2 to conduct, thus preventing collector-to-base avalanche. The transistor will therefore operate at near its full voltage capabilities within its safe secondary breakdown region. Coupling and matching from the drive amplifier to the dual base input circuit of transistors Q_3 and Q_4 are made via a transmission line toroidal transformer to minimize capacitance and leakage reactance. Parallel lines of known constants are used to approximate a true transmission line, providing a unity power factor or VSWR over many frequency decades. For the same load conditions, a conventional transformer resulted in a 1 MHz bandwidth compared to a bandwidth of more than 100 MHz for the transmission line device.

Notes:

1. Experiments have shown that the circuit can be adapted to generate high-speed, high-voltage, high-stability power pulses at megawatt levels.
2. Complete details may be obtained from:

   Technology Utilization Officer
   Marshall Space Flight Center
   Huntsville, Alabama 35812
   Reference: B68-10308

Patent status:

No patent action is contemplated by NASA.

Source: W. E. Milberger
of Westinghouse Electric Corporation
under contract to
Marshall Space Flight Center
(MFS-14034)

NASA TECH BRIEF

NASA Tech Briefs are issued to summarize specific innovations derived from the U.S. space program, to encourage their commercial application. Copies are available to the public at 15 cents each from the Clearinghouse for Federal Scientific and Technical Information, Springfield, Virginia 22151.

Feasibility Study of Wireless Power Transmission Systems

A study has been made of the feasibility of using microwave or laser energy for wireless transfer of power from a manned, Earth-orbiting central station to unmanned astronomical substations. This is a recent conception, and details of a power-transfer system have not been established. Therefore, the possibility of wireless power transfer is judged on the basis of the state of research and development in power generation, transmission, and conversion.

Existing microwave power generation is more than adequate for the estimated 2 kW requirement of a satellite substation. Generators such as superpower Amplitrons have a laboratory output exceeding 400 kW of cw power at a wavelength of 10 cm. In an unoptimized power system (including generation, transmission, and conversion) with an overall efficiency of 18 percent, an Amplitron could supply power for several substations. Microwave power transmission would require better efficiency than is acceptable for present radar and communication systems. One idea for improving efficiency is to form a convergent beam in an ellipsoidal transmission "envelope." Calculations involving the relationship between antenna size and operating wavelength show that antenna size can be reduced as wavelength is reduced. However, generator efficiency also diminishes with shorter wavelength. The implication is that improvement of generator efficiency for operation at shorter wavelengths (less than 3 cm) would permit a significant reduction in antenna size. Direct conversion of microwave to dc power is a more recent development than power generation. Semiconductor diodes and close-spaced thermionic diode rectifiers are considered the most promising components for aerospace applications. A microwave power transfer system has already been used experimentally to operate a helicopter device; and a beam-riding system is under development. This is an attempt to use a microwave beam to control a distant helicopter as well as supply its operating power. The present availability and performance of microwave components and the progress being made in research and development point to the feasibility of a practical wireless power-transfer system for aerospace use within a few years.

Laser high-power development, being newer, is behind microwave technology. The highest power attained in the laboratory has been 7 kW, with a CO_2–N_2–He medium. Despite the short history of its development, however, power generation is progressing rapidly; the 7 kW output represents more than a threefold increase within the year. Laser power transmission and conversion still are in the research stage. One of the goals of research in power transmission is to obtain a long-lived refractor that will withstand high-power radiation. Lenses of doped germanium (Ge–Sb–Se) and of ultrapure germanium are being tested for this use. Laser energy has been converted to electric power by means of photovoltaic detectors. These are semiconductor diodes with p-n junctions of Cd–Hg–Te alloys, and can be made for efficient operation at the CO_2 laser wavelength. Calculations similar to those made for microwave antenna size show that transmission and receiving apertures would be much smaller

(continued overleaf)

This document was prepared under the sponsorship of the National Aeronautics and Space Administration. Neither the United States Government nor any person acting on behalf of the United States Government assumes any liability resulting from the use of the information contained in this document, or warrants that such use will be free from privately owned rights.

for the laser beam. This offers a special advantage over a microwave system, which must compromise between transfer efficiency and antenna size.

Notes:

1. The feasibility study contributes to general knowledge of the state of the art and should be of interest to those concerned with future development of wireless power transmission systems for industrial and commercial applications.
2. Complete details may be obtained from:

   Technology Utilization Officer
   Marshall Space Flight Center
   Huntsville, Alabama 35812
   Reference: B68-10309

Patent status:

No patent action is contemplated by NASA.

Source: W. J. Robinson, Jr.
(MFS-14691)

NASA TECH BRIEF

NASA Tech Briefs are issued to summarize specific innovations derived from the U.S. space program, to encourage their commercial application. Copies are available to the public at 15 cents each from the Clearinghouse for Federal Scientific and Technical Information, Springfield, Virginia 22151.

Standards for Compatibility of Printed Circuit and Component Lead Materials

Microminiature electronic component technology has been faced with many packaging problems. Essentially, the problems relate to the compatibility of lead materials, joining techniques, transfer molding concepts, printed circuit board materials, and process and material specifications. In an effort to resolve these problems, an investigation was conducted to extend the usefulness of existing process data and fabrication technology and to develop other refinements. The investigation was divided into four task categories: (1) analysis of welding parameters; (2) evaluation of printed circuit board materials; (3) development of microsoldering techniques; and (4) study of transfer molding. The primary objectives of these tasks were to: (1) determine correlation between microweld pulse parameters, infrared emission, and weld strength; (2) evaluate printed circuit board materials to determine requirements and availability of materials to be used in space environment; (3) develop criteria and techniques applicable to microsoldering as applied to thin films, thick films, and flat packs; and (4) develop quality criteria and process limits for transfer molding. The results of the investigation are summarized below:

1. Welding Parameters—To study the effects of varying welding parameters, statistical experiments were designed using four wire materials. These welding parameters included Watt-second energy, weld pulse risetime, and electrode pressure for each wire combination. During each weld, simultaneous recordings were made of voltage, current, and infrared radiation. Set-down and weld strength were also recorded. Analysis of the information derived from the statistical experiments revealed new insights into critical weld pulse parameters, with particular emphasis on pulse slope and energy and their effects on the physical weld characteristics, such as metallic structure and strength.

Correlation between infrared heat radiation and the quality of the weld joint has been verified. This correlation is important because it is the basis for a reliable in-process nondestructive inspection technique that is instantaneous and automatic. That this infrared radiation technique is one possible solution to the problem of obtaining consistent high-quality welds under volume production conditions is amply documented from the thousands of welds performed.

2. Printed Circuit Board Materials—The influence of space environment on the electrical and mechanical properties of circuit board material was evaluated to determine the material type most satisfactory for use in space applications. The investigation included an analysis of the techniques of etching, soldering, and welding to determine their effect on the outgassing rate of boards subjected to a high-vacuum environment.

The laboratory testing condition established as satisfactory for material exposure is a vacuum of 1.0×10^{-5} mm of Hg. This test environment permitted executing the program in five phases. Phase 1 was a mass material screening exposure to the simulated environment. Phase 2 was a selective, more detailed material exposure analysis utilizing a microbalance for more precise weight loss determinations. Phase 3 was an analysis of the test results of Phase 2. Phase 4 summarized the conclusions based on the results. Phase 5 dealt with material types best suited for space applications.

(continued overleaf)

This document was prepared under the sponsorship of the National Aeronautics and Space Administration. Neither the United States Government nor any person acting on behalf of the United States Government assumes any liability resulting from the use of the information contained in this document, or warrants that such use will be free from privately owned rights.

3. Microsoldering—The various factors involved in microsoldering were studied, and extensive tests were conducted to determine the most compatible combination of soldering methods, solder alloy, flux type, deposited surfaces, and pad size that would produce acceptable solder joints on thin and thick film circuits.

Acceptable solder joints were determined through the pull, fatigue, creep, and environmental tests. The primary results of the study are as follows:

(a) The most constant and acceptable joints were obtained by using a modified parallel gap resistance weld-soldering machine. Hand soldering with extensive skill could meet minimum requirements. Optical soldering was not suited to applications study in this program.

(b) A commercial low-temperature melting alloy proved to be satisfactory for soldering solid gold wire. Where gold-plated (less than 0.000070-inch) copper and Kovar leads were used, 60Sn/40Pb provided the highest strengths.

(c) Mild fluxes are recommended for microsoldering operations.

(d) The most satisfactory thin film surfaces for the solder joint area were chrome/gold/chrome (0.000015-inch)/gold (0.000020- to 0.000070-inch).

(e) Platinum gold ink, oven cured, provided the most satisfactory surface for thick films; palladium gold was almost as good.

4. Transfer Molding—Transfer molding of epoxy compounds was found to be an effective, reliable, and low cost method of encapsulating cordwood electronic modules. To apply this technique, it was necessary to establish quality assurance requirements. A preliminary procurement specification was prepared for soft flow epoxy compounds capable of polymerization at 250°F or below at 480 psi maximum pressure. Six compounds (from three suppliers) met the initial screening tests and were subsequently run through extensive electrical, physical, mechanical, and thermal tests. Data from these tests were then used to establish a proposed Material Specification and Design Guideline for transfer molding of electronic circuits. A developmental mold was designed and fabricated. This mold, by change of an insert, can accommodate modules from 1×1×1 to 1×1×3.50 inches. The mold was checked for proper filling and venting and then was used for molding test modules.

Note:

Complete details may be obtained from:

Technology Utilization Officer
Marshall Space Flight Center
Huntsville, Alabama 35812
Reference: B68-10310

Patent status:

No patent action is contemplated by NASA.

Source: Martin Marietta Corporation
under contract to
Marshall Space Flight Center
(MFS-14531)

NASA TECH BRIEF

NASA Tech Briefs are issued to summarize specific innovations derived from the U.S. space program, to encourage their commercial application. Copies are available to the public at 15 cents each from the Clearinghouse for Federal Scientific and Technical Information, Springfield, Virginia 22151.

Improved Electro-Optical Tracking System

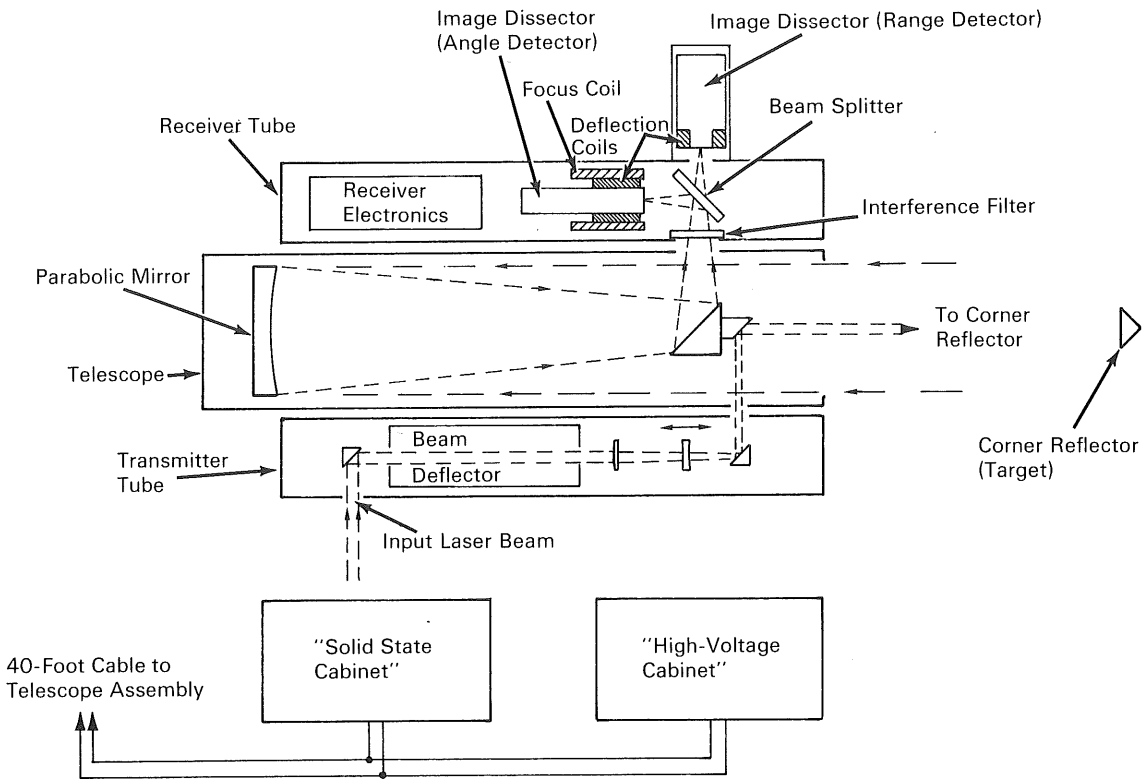

The schematic diagram represents a prototype of an electro-optical system designed to track a space vehicle from the instant of liftoff to a maximum slant range of 10 kilometers. The system employs a laser beam illuminating source, an electronic laser beam deflector, and an image dissector photomultiplier which search for the target (an optical corner reflector), acquire it, and track it electronically anywhere within a 1° × 1° field of view. Several major improvements are realized by the introduction of an electronically scannable transmitter and receiver to an ordinary optical tracking system. In addition to providing a scanning capability for search and acquisition, this system permits the transmitter and receiver to follow rapid movements or accelerations of the target electronically.

The system consists of an optical telescope assembly and two electronics cabinets. The components of the telescope assembly are contained in three aluminum tubes and a small electronics chassis, all of which are

(continued overleaf)

This document was prepared under the sponsorship of the National Aeronautics and Space Administration. Neither the United States Government nor any person acting on behalf of the United States Government assumes any liability resulting from the use of the information contained in this document, or warrants that such use will be free from privately owned rights.

supported by a bezel casting. The latter is designed to mount directly onto the elevation gimbal of an existing NASA precision tracking pedestal. The two components which give the system its unique electronic scanning capability are the beam deflector and the image dissector. The transmitter tube contains the beam deflector, which can electronically steer the laser beam in two dimensions with maximum deflections of approximately ±0.33 degree. The collimating lenses magnify this to ±0.50 degree and also adjust the output laser beamwidth to a nominal 1/44 degree. The receiver tube contains a standard image dissector, which is a photomultiplier with an imaging section that allows its small instantaneous field of view to be scanned in two dimensions. The ultimate accuracy of the system is provided by the image dissector, which performs like a star tracker with an electronically controllable bias. The only function of the laser and beam deflector is to illuminate the corner reflector so that the beam dissector can track it. The telescope is a simple Newtonian astronomical unit. It images a 1° × 1° field of view onto the photocathode of the image dissector. The latter, however, scans only a portion of this field at one time, specifically a square field measuring 100 arc seconds on a side. Solid state control electronics and logic circuitry for the system are contained in one cabinet. A second cabinet contains three high-voltage power supplies and two high-voltage amplifiers for driving the beam deflector.

Notes:

1. This system may be of interest in the fields of air defense and commercial air traffic control.
2. Complete details may be obtained from:

   Technology Utilization Officer
   Marshall Space Flight Center
   Huntsville, Alabama 35812
   Reference: B68-10311

Patent status:

Inquiries about obtaining rights for the commercial use of this invention may be made to NASA, Code GP, Washington, D.C. 20546.

Source: R. E. Johnson and P. F. Weiss
of Sylvania Electronic Systems
under contract to
Marshall Space Flight Center
(MFS-14791)

NASA TECH BRIEF

NASA Tech Briefs are issued to summarize specific innovations derived from the U.S. space program, to encourage their commercial application. Copies are available to the public at 15 cents each from the Clearinghouse for Federal Scientific and Technical Information, Springfield, Virginia 22151.

System Measures Arc Energy Dissipated in Relay Contact Cycling

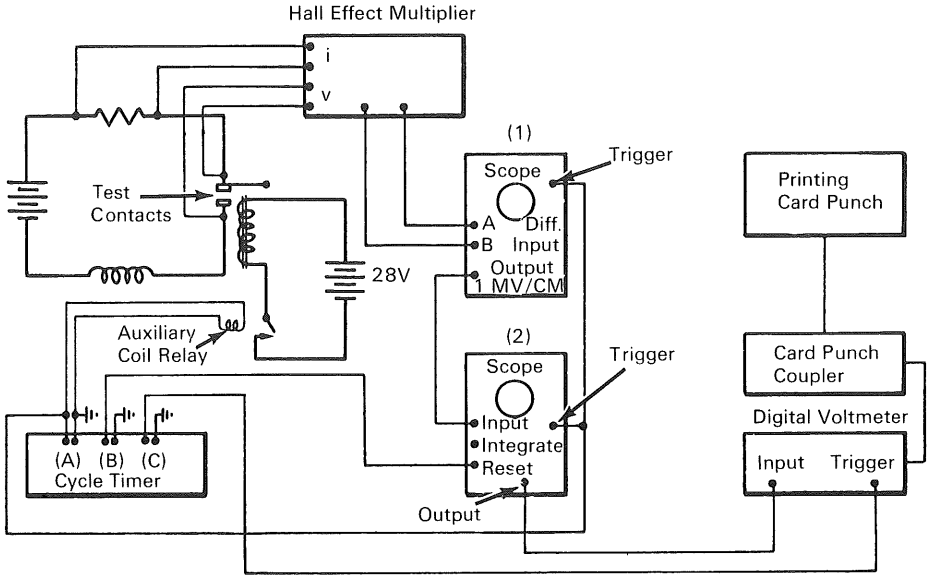

A system has been devised for measuring the energy dissipated at the contacts of a relay operating in an electrical circuit. The system measures as well as records the energy for a large number of repetitive operations. It allows changes to be easily made in the cycle time, relay circuit parameters, and portion of the energy measured (i.e., the energy dissipated when opening the circuit, closing the circuit, or both).

The block diagram shows how the measuring system is set up. The cycle timer, which controls the operation of the entire system, consists of a motor-driven shaft with adjustable cams. The cycle time can be adjusted by changing the gear ratio; in addition, the duration and time of each switch closure is individually adjustable. The cycle timer may operate in conjunction with a 28-volt power supply to provide timed voltages as well as contact closures. For example, channel (A) of the timer supplies the voltage to energize an auxiliary relay whose contacts control the coil circuit of the relay under test. This auxiliary relay provides the following advantages: It prevents the large inductive voltage produced by the relay coil from being fed back into the system. It permits the use of an external power supply for the test relay coil, thereby preventing excessive transient loading of the cycle timer supply. The Hall effect multiplier produces a voltage which is proportional to the product of the instantaneous current and voltage (that is instantaneous power) at the contacts under test. The output of the multiplier is connected to the 1 mv per cm differential input of a specially modified oscilloscope (1). The scope has been modified to provide a low-impedance high-level output in addition to the visual display of instantaneous power. The output voltage

(continued overleaf)

This document was prepared under the sponsorship of the National Aeronautics and Space Administration. Neither the United States Government nor any person acting on behalf of the United States Government assumes any liability resulting from the use of the information contained in this document, or warrants that such use will be free from privately owned rights.

from this oscilloscope is applied to the input of a controlled integrator (not shown) whose output is the instantaneous value of energy. A type O plug-in unit for the second oscilloscope (2) is fitted with a relay control circuit for this purpose. This relay is controlled by cycle timer channel (B).

The output of the integrator is displayed on the cathode ray tube of oscilloscope (2) and measured by a digital voltmeter. The diagram shows the connection of the cycle timer channel (C) to the digital voltmeter to trigger the measurement. When the portion of the energy to be measured has been integrated, the trigger input to the digital voltmeter is closed to ground. This initiates a 100 msec time interval during which the voltmeter measures the dc voltage at the output of the integrator. At the end of this measurement interval the voltmeter sends a pulse via the card punch coupler to a printing card punch which punches the value of the voltage in the card.

Note:

Inquiries concerning this system may be directed to:

Technology Utilization Officer
Marshall Space Flight Center
Huntsville, Alabama 35812
Reference: B68-10312

Patent status:

No patent action is contemplated by NASA.

Source: Oklahoma State University
under contract to
Marshall Space Flight Center
(MFS-14541)

NASA TECH BRIEF

NASA Tech Briefs are issued to summarize specific innovations derived from the U.S. space program, to encourage their commercial application. Copies are available to the public at 15 cents each from the Clearinghouse for Federal Scientific and Technical Information, Springfield, Virginia 22151.

Analysis and Design of a Class-D Amplifier

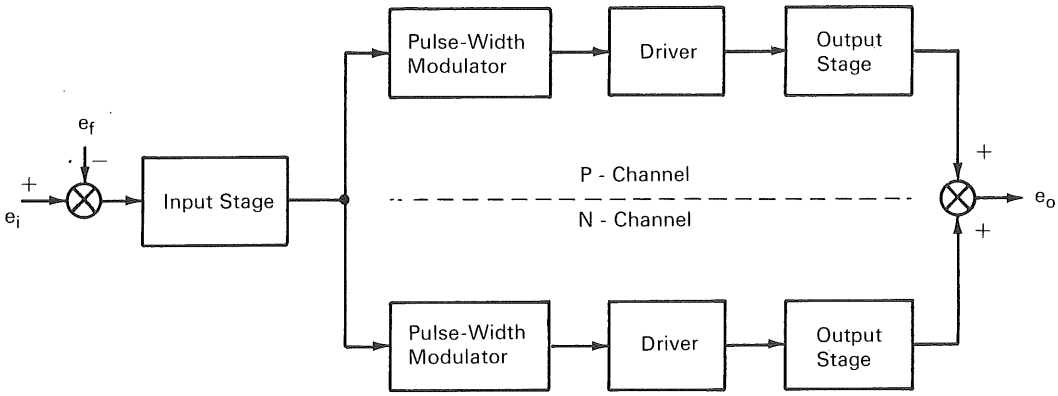

Switching-mode, or class-D amplification may be used to take advantage of the high efficiency of operating transistors in the saturation region. A theoretical analysis has been made of a basic class-D amplifier circuit configuration, and the results of the analysis have been applied to a specific procedure for the practical design of class-D amplifiers that are readily adaptable to a variety of applications. The theoretical aspects of the basic design are considered with a stage-by-stage analysis of feedback, input and output (load) configurations, and the frequency spectrum of the pulse-width-modulated signal.

The basic class-D amplifier design developed is shown in the block diagram. The input stage is a high-gain operational amplifier with local feedback, connected in such manner that the stage is a noninverting amplifier. The primary function of the input stage is to provide the complete class-D amplifier with a high open-loop voltage gain. In addition, this stage provides a high-impedance input and a convenient means of introducing frequency compensation for stabilization of the complete amplifier. The input stage amplifies the difference voltage, a signal proportional to the difference between the input e_i and feedback e_f voltages. This signal provides a control voltage to the pulse-width modulator. The modulator, driver, and output stages each have two separate, but similar circuits, referred to as the "P" channel, which responds to positive control voltages and produces negative output voltages, and the "N" channel, which responds to negative control voltages and produces positive output voltages. The polarity of the control voltage determines which channel is to be activated, and the magnitude of the control voltage determines the pulse width produced by the modulator. The pulses generated by the modulator undergo power amplification in the driver stage and are coupled to the output stage, causing the output stage to operate in the switching mode. The high-power pulse signal generated is filtered to provide an analog output voltage, e_o.

Some of the features possessed by the basic amplifier design presented are: (1) the capability of producing both ac and bipolar dc output voltages (a dc

(continued overleaf)

This document was prepared under the sponsorship of the National Aeronautics and Space Administration. Neither the United States Government nor any person acting on behalf of the United States Government assumes any liability resulting from the use of the information contained in this document, or warrants that such use will be free from privately owned rights.

voltage of either polarity); (2) a maximum power output of several hundred watts, without significant departure from the basic design; (3) overall dc efficiency of 90% at maximum power output, with efficiency remaining relatively high over most of the range of power output; (4) very low quiescent power consumption; and (5) input and output circuitry adaptable to a wide variety of signal sources, loads, and feedback configurations.

Note:

Complete details may be obtained from:

Technology Utilization Officer
Marshall Space Flight Center
Huntsville, Alabama 35812
Reference: B68-10313

Patent status:

No patent action is contemplated by NASA.

Source: Electrical Engineering Research Laboratory, Auburn University under contract to Marshall Space Flight Center (MFS-14803)

NASA TECH BRIEF

NASA Tech Briefs are issued to summarize specific innovations derived from the U.S. space program, to encourage their commercial application. Copies are available to the public at 15 cents each from the Clearinghouse for Federal Scientific and Technical Information, Springfield, Virginia 22151.

Color-Televised Medical Microscopy

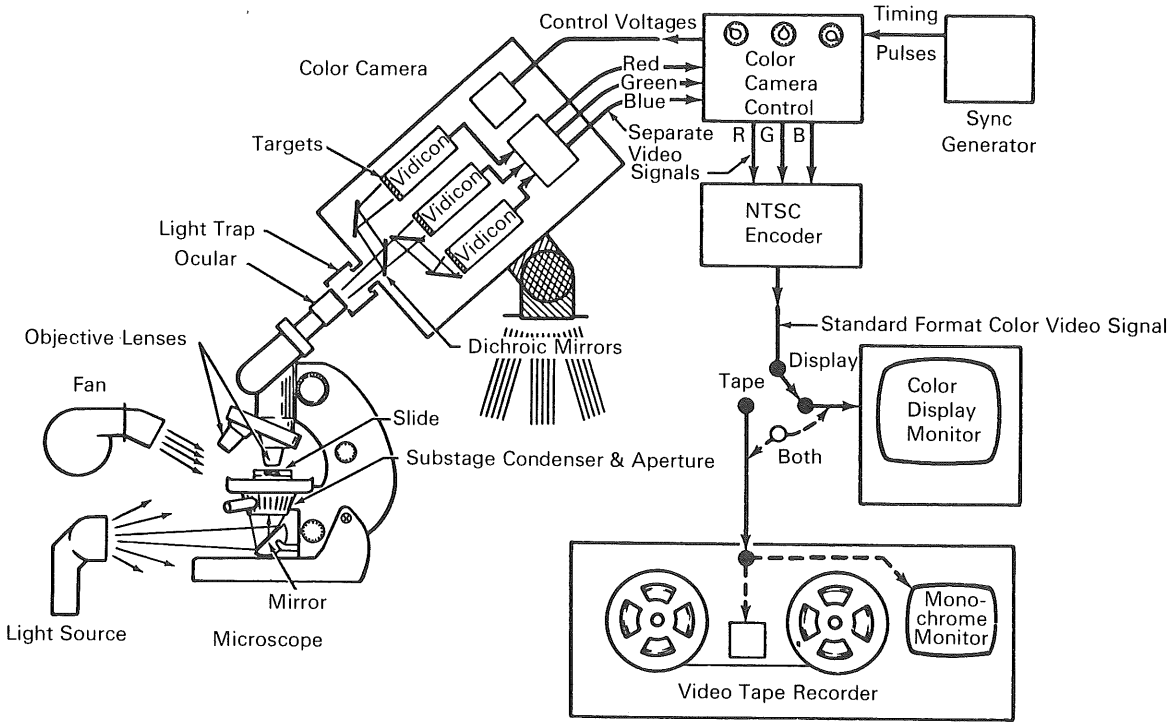

An investigation has been made into the feasibility of color-television microscopy for use at laboratory-range magnifications to reproduce a slide image with sufficient fidelity for medical laboratory or instructional use.

The arrangement of the system is as illustrated and uses an external light source and substage mirror to illuminate the slide, and a blower directed at the microscope stage to dissipate lamp-generated heat. The slide's real image, formed by the microscope optics, is projected through the lens opening into the color television camera with the camera lens removed. Dichroic mirrors at the camera's optical input separate the image into its red, green, and blue components and direct them to the photosensitive targets of three vidicon tubes, which act as optical-to-video transducers. Synchronous scanning of these targets produces three video signals corresponding to the optical image's red, green, and blue components.

After processing by the color camera control unit, the three video signals are combined into a single color television signal in the standard National Television System Committee (NTSC) format by the NTSC encoder. From the NTSC encoder, the encoder video

(continued overleaf)

This document was prepared under the sponsorship of the National Aeronautics and Space Administration. Neither the United States Government nor any person acting on behalf of the United States Government assumes any liability resulting from the use of the information contained in this document, or warrants that such use will be free from privately owned rights.

signal is routed either to the display monitor for real time viewing, or to the video tape recorder for storage, or to both.

Notes:

1. All major equipment items in the system are standard, commercially available units.
2. Many applications for the use of color-television microscopy suggest themselves. Medical education implementation, instant pathology reporting between operating room and remotely located pathologist viewing a biopsy through this medium, and computerized comparison of chromosome patterns from the digitized video signals with a pattern recognition program are some possibilities.
3. Microscope slides have been successfully color televised at ×970 (oil immersion) magnification.
4. Inquiries concerning this innovation may be directed to:

   Technology Utilization Officer
   Manned Spacecraft Center
   Houston, Texas 77058
   Reference: B68-10314

Patent status:

No patent action is contemplated by NASA.

Source: John C. Peck and Marshall A. Heath (MSC-13086)

NASA TECH BRIEF

NASA Tech Briefs are issued to summarize specific innovations derived from the U.S. space program, to encourage their commercial application. Copies are available to the public at 15 cents each from the Clearinghouse for Federal Scientific and Technical Information, Springfield, Virginia 22151.

Gimbal Angle Sensor

Sensors for detecting the angular movement of rotation elements are usually very long (if detection is linear) or expensively shaped (if detection is to be angular). In the development of a gimbaled reaction wheel mounting, limitations on space and weight precluded using state-of-the-art methods for sensing gimbal rotation. Instead, a mechanical differentiator is slotted so that the first derivative of the radius vector with respect to the rotation angle is a constant. Thus, as light passing through the slot strikes the detector, the relative position of the spot on the surface of the detector is a direct measure of angular displacement.

The system incorporates a standard light source and a commercially available photoresistive element. Rather than using optical collimation, the innovator designed a rectangular light channel that is lighter and more effective. The mechanical differentiator is a slotted mask contoured to produce the constant noted above. It is mounted about the axis of rotation of the gimbal. The detector flake is located parallel to the mask (about three inches from the center of rotation) with its active surface aligned along a radius vector originating at the center of rotation. Most angular motion detectors are mounted perpendicular to the radius vector.

As the gimbal moves, light passes through the mask and strikes a section of the detector, the electrical output of which has been calibrated in terms of degrees of rotation. The system has a coarse range of from zero to $\pm 27°$ and a fine range of from zero to $\pm 7°$ with accuracies to $\pm 0.6°$. Also, the need for logic circuitry in the electronics portion of the system is reduced considerably.

Note:

Inquiries concerning this innovation may be directed to:

Technology Utilization Officer
Goddard Space Flight Center
Greenbelt, Maryland 20771
Reference: B68-10315

Patent status:

No patent action is contemplated by NASA.

Source: J. George Zaremba
of TRW Systems Group, TRW, Inc.
under contract to
Goddard Space Flight Center
(GSC-10305)

Category 01

This document was prepared under the sponsorship of the National Aeronautics and Space Administration. Neither the United States Government nor any person acting on behalf of the United States Government assumes any liability resulting from the use of the information contained in this document, or warrants that such use will be free from privately owned rights.

NASA TECH BRIEF

NASA Tech Briefs are issued to summarize specific innovations derived from the U.S. space program, to encourage their commercial application. Copies are available to the public at 15 cents each from the Clearinghouse for Federal Scientific and Technical Information, Springfield, Virginia 22151.

Optimetric System Facilitates Colorimetric and Fluorometric Measurements

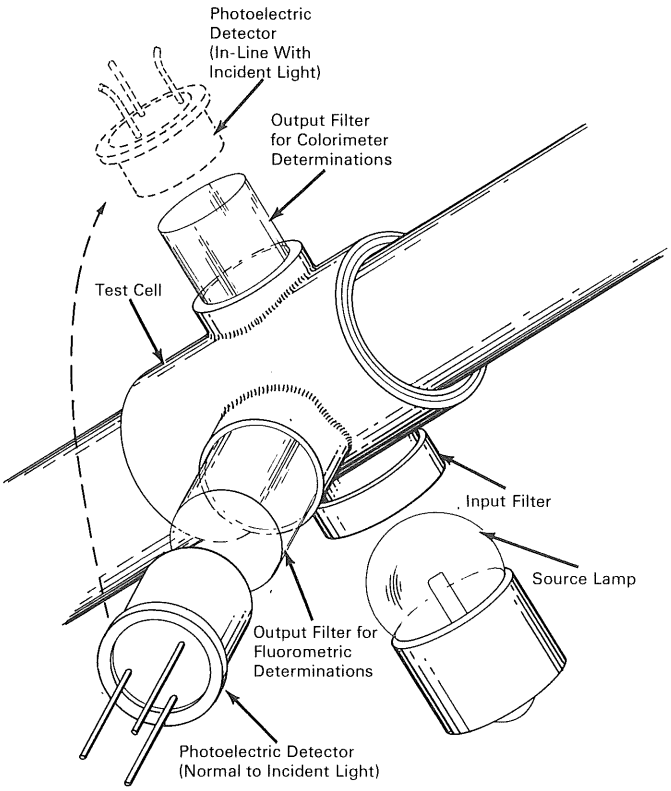

A compact, unitary optimetric system has been devised for colorimetric, fluorometric, and spectral absorption measurements. There are many known systems that are designed specifically for making colorimetric measurements or specifically for fluorometric measurements. None of these systems is as simple or compact as the unitary system, which employs a single device for colorimetric, fluorometric, and absorption measurements, as required. In conjunction with this system, a simple technique has been developed for fabricating small lenses.

The basic element of the unitary system is a test cell represented in the illustration. The sample to be subjected to measurement is placed in the cell. For a fluorometric determination, the detector is positioned normal to the incident light from the source. For colorimetric determinations (spectral absorption or transmission measurements), the detector is positioned in

(continued overleaf)

This document was prepared under the sponsorship of the National Aeronautics and Space Administration. Neither the United States Government nor any person acting on behalf of the United States Government assumes any liability resulting from the use of the information contained in this document, or warrants that such use will be free from privately owned rights.

line with the incident light through the sample under test. In this test cell design, the filter elements with lenses are fused into the wall of the cell.

Small lenses can be used as separate elements in an alternative design. A simple technique for making a lens is as follows: A platinum wire is formed into a ring having a diameter corresponding to the diameter of the required lens. A glob of fused glass is placed in the ring which is held perfectly horizontally while the glass is allowed to cool slowly to the "solid" state. The surface shape of the lens (lens formula) may be calculated very accurately, as the surface tension of the fused glass (which produces a meniscus) is constant over the entire area of contact with the platinum ring. Small lenses of this character cannot be ground to the degree of accuracy achieved by this technique. The molten glass can be mixed with appropriate coloring materials to produce built-in lens-filter combinations. A flat ring of platinum or gold is used when an appreciable thickness or lens barrel is desired. The surface shapes of the lenses can be controlled by rolling the ring or sleeve during cooling of the fused glass. Accurate control of the focal length of the lens may be accomplished by using a predetermined weight of the glass applied to the ring or sleeve.

Patent status:

Title to this invention has been waived under the provisions of the National Aeronautics and Space Act [42 U.S.C. 2457 (f)], to the California Institute Research Foundation, 1201 E. California Boulevard, Pasadena, California 91109.

Source: F. C. Haley
Jet Propulsion Laboratory
(NPO-10233)

NASA TECH BRIEF

NASA Tech Briefs are issued to summarize specific innovations derived from the U.S. space program, to encourage their commercial application. Copies are available to the public at 15 cents each from the Clearinghouse for Federal Scientific and Technical Information, Springfield, Virginia 22151.

Method of Reducing Time Base Error in Digital Magnetic Recorders

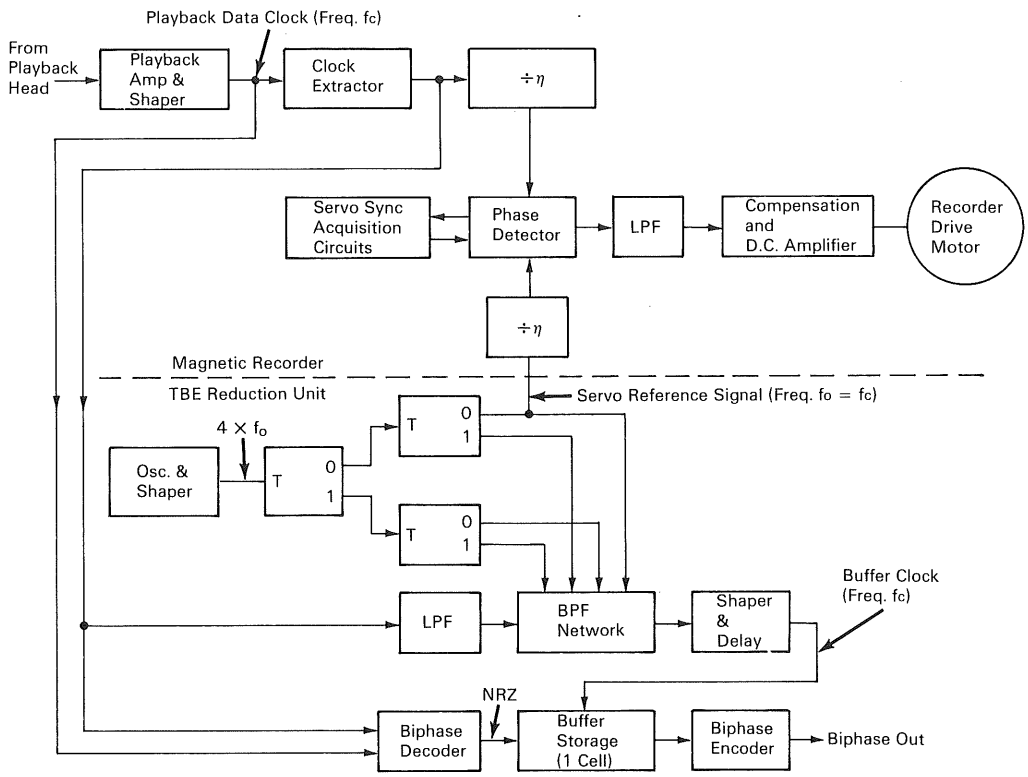

An apparatus for the reduction of time base error (TBE) in the playback of digital data from a certain class of magnetic recording equipment is described herein. The TBE of a signal is defined as the dynamic phase deviation of the signal from an extrapolated long term average phase. The apparatus was developed for a magnet which employs a servo position control of the tape by which the playback data clock is phase locked with a fixed frequency reference signal. The peak-to-peak TBE of the playback data of the recorder must be less than the period of a data bit for the apparatus to function properly.

The accompanying figure shows a block diagram of the system. The playback data is in biphase form and the clock is extracted from it. The TBE in the data (and clock) is a result of angle modulation caused by tape speed variations. The clock signal is passed through a very narrow bandpass filter which has a center frequency equal to the nominal (average) playback data rate. The filter band limits the clock signal and in so doing effectively removes harmonic components and the angle modulation sideband components

(continued overleaf)

This document was prepared under the sponsorship of the National Aeronautics and Space Administration. Neither the United States Government nor any person acting on behalf of the United States Government assumes any liability resulting from the use of the information contained in this document, or warrants that such use will be free from privately owned rights.

except those with frequencies very nearly equal to the nominal data rate. The resulting signal has a lower degree of angle modulation and therefore a reduced amount of TBE. For effective TBE reduction, the bandwidth of the bandpass filter must be very small. Also it is essential that the frequency corresponding to the nominal playback data rate lie in the passband region of the filter where the attenuation and phase shift are negligible. The use of a fixed frequency filter is not practical due to the stringent requirements which would be imposed on the center frequency tolerance and the drift characteristic.

The filter employed is one in which the center frequency tracks the frequency of the servo reference signal. Since the extracted clock is phase locked to the servo reference signal, the nominal data rate lies in the center of the filter's bandpass region. The filter is of a type sometimes referred to as a digital filter. It employs a synchronous modulator–demodulator type of circuit which translates the amplitude and phase characteristics of a low pass filter which are symmetrical about zero frequency by an amount equal to the modulation frequency, which in this case is the frequency of the servo reference signal. The output of the filter is squared and delayed to obtain the proper phase for reclocking the data. The playback data is converted to NRZ and fed to a signal cell buffer storage unit where it is held until transferred out by the processed clock. The TBE of the buffer output is equal to that of the processed clock. The data is then reconverted to biphase form.

The advantage of the system described over one in which the buffer output clock is obtained from the servo reference signal by delaying it is that the phase difference between the data and buffer output clock is independent of the phase difference between the playback data and servo reference signal. Any changes in the mechanical load on the servo motor resulting in a change in the phase difference between the servo reference signal and playback signal will not cause changes in the clocking points of the signal from the buffer in the system described.

The advantage of this system as compared to others for achieving TBE reduction is that the system requires less circuitry. In cases where the worst case peak-to-peak TBE is greater than the period of a data bit, a buffer of increased capacity is required.

Note:

Inquiries concerning this innovation may be directed to:

Technology Utilization Officer
Goddard Space Flight Center
Greenbelt, Maryland 20771
Reference: B68-10317

Patent status:

No patent action is contemplated by NASA.

Source: John M. Moore
of Electro-Mechanical Research, Inc.
under contract to
Goddard Space Flight Center
(GSC-10108)

NASA TECH BRIEF

NASA Tech Briefs are issued to summarize specific innovations derived from the U.S. space program, to encourage their commercial application. Copies are available to the public at 15 cents each from the Clearinghouse for Federal Scientific and Technical Information, Springfield, Virginia 22151.

Ultrasonic Temperature Measuring Device

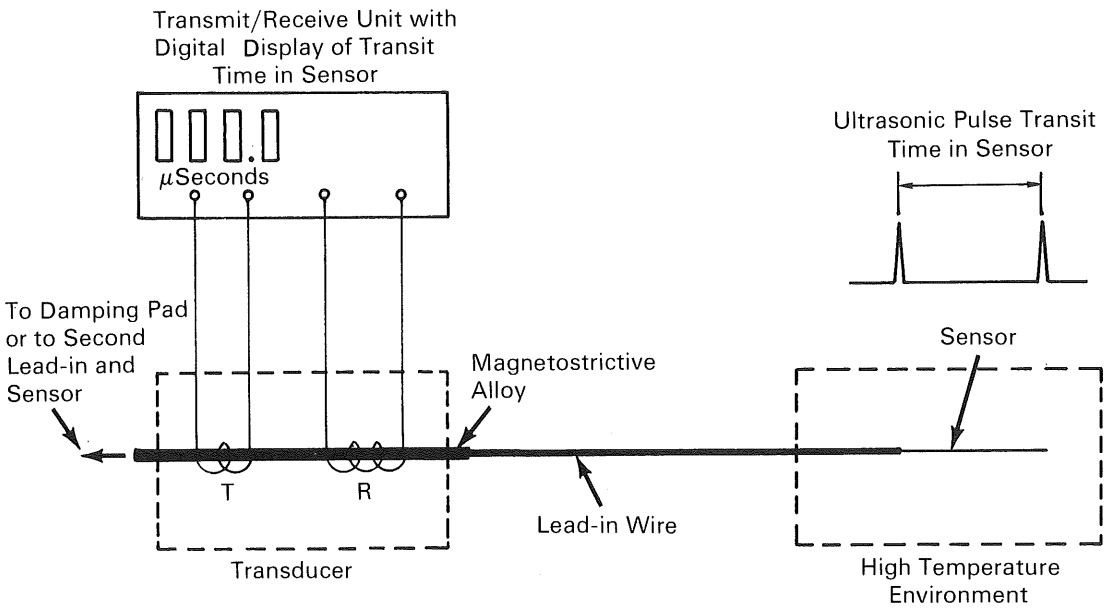

The problem:

One of the more important measurements required in nuclear rocket engine technology is the measurement of temperature in the core of the engine. This measurement has proven to be extremely difficult because of the high temperatures involved (≈5000° R), because of compatibility problems with some of the materials involved (graphite and hydrogen) and because of the intense and sustained neutron and gamma fluxes. Additional difficulties stem from the high ambient noise, shock, and vibration levels encountered in some locations, the high degree of accuracy and the response time required, possibility of temperature overshoot, high pressure, accessibility, geometrical restrictions, etc.

The solution:

A pulse echo ultrasonic system which automatically determines temperature by measuring the transit time of an acoustic pulse in a wire sensor. The measurement is based on the fact that the speed of sound in the sensor material is a function of temperature.

How it's done:

The principle elements of the ultrasonic system, shown in the figure include a transducer, a lead-in wire, a sensor, and an automatic electronic instrument for producing pulses and measuring the transit time between the two reflected pulses. A pulse is produced electrically in the transmitting coil T. This pulse is converted magnetostrictively to an acoustic pulse which travels down the lead-in wire to the sensor.

(continued overleaf)

This document was prepared under the sponsorship of the National Aeronautics and Space Administration. Neither the United States Government nor any person acting on behalf of the United States Government assumes any liability resulting from the use of the information contained in this document, or warrants that such use will be free from privately owned rights.

The pulse is partially reflected from that point of the wire sensor where the acoustic impedance is changed. The acoustical impedance change in the sensor can be a kink, bend, or abrupt diameter change. The remainder of the pulse continues along the sensor and is reflected from the end of the sensor. The two reflected pulses travel back up the lead-in wire to the receiving coil R where they are converted in an inverse magnetostrictive manner to electrical pulses. The time between the two pulses is inversely proportional to the speed of sound in the sensor which is a function of sensor temperature.

The magnetostrictive transducer is made by winding a coil on a nickel alloy wire. In axially-magnetized wires, an extensional wave is propagated in the wire.

This device averages 10 measurements of transit time in the sensor to ± 0.1 μsec., and provides this average reading in digital and analog form with an instrument response time of 0.1 sec.

Notes:

1. The ultrasonic thermometer offers several advantages over thermocouples, depending upon the application. These advantages are due partly to the greater choice of ultrasonic sensor materials. Only one material is required for the sensor instead of two as is required by a thermocouple. The ultrasonic thermometer does not require electrical insulation, thereby eliminating the shunting errors experienced by small thermocouples at high temperatures. The sensor may be installed bare in electrically conducting media if the sensor material is compatible with the environment. If a pressure seal is required, the lead-in wire can be brazed or welded to a sealing diaphragm which is thin compared to wavelength. Electrical feedthroughs or compression seals can also be used if compatible with the environment. The ultrasonic sensor, composed of only one material, is not subject to calibration shifts which, in thermocouples, are caused by diffusion of material from one leg into the other.
2. Inquiries concerning this innovation may be directed to:

   Technology Utilization Officer
   Lewis Research Center
   21000 Brookpark Road
   Cleveland, Ohio 44135
   Reference: B68-10319

Patent status:

No patent action is contemplated by NASA.

Source: L. C. Lynnworth and E. H. Carnevale
of Parametrics, Inc.
under contract to
Lewis Research Center
(LEW-10446)

NASA TECH BRIEF

NASA Tech Briefs are issued to summarize specific innovations derived from the U.S. space program, to encourage their commercial application. Copies are available to the public at 15 cents each from the Clearinghouse for Federal Scientific and Technical Information, Springfield, Virginia 22151.

Concept to Convert Electrical Power

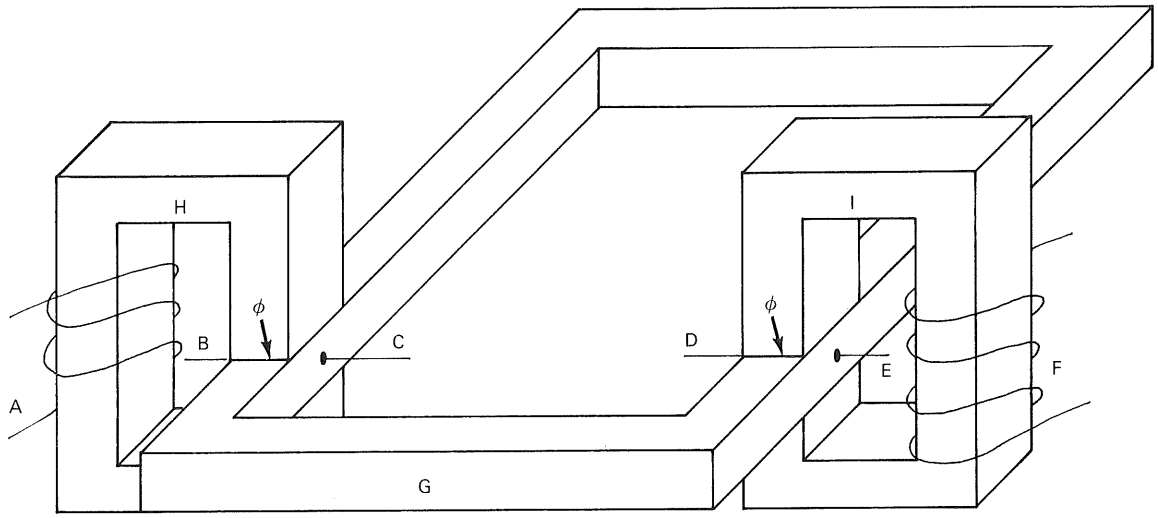

An idea has been conceived, based on published studies of the performances of liquid metals in the presence of field fluxes and the physics of electricity and magnetism, that could produce advantageous electrical power conversion techniques. By this concept, it may be possible to transform electrical energy, either alternating current or direct current from one voltage level to a different voltage level, or from ac to dc or vice versa.

The concept envisions a moving fluid electrical conductor as its only physically moving part, in contrast to the brushes, commutators, slip rings, and the like found in conventional conversion devices. The electrically conductive fluid of this concept is to perform as a coupling medium between or among multiple electromagnetic fields to transfer energy between or among the fields, and, in accordance with their designs, produce the desired conversions.

Exciting coil A of the electromagnet consisting of it and the magnetic core H will cause a magnetic field to exist between its poles, between which is placed a hollow closed channel or pipe G containing an electrically conductive fluid, with the longitudinal axis of one leg of the channel at right angles to the axis of the magnetic field. A voltage impressed between electrodes B and C in the walls of the channel and in contact with the fluid, in the locations shown, will cause a current to flow through the fluid in a direction at right angles to the axis of the magnetic field. A force will then be applied to the fluid within the fields and in a direction perpendicular to both of them, or in the direction of the leg of the channel. This force will cause the fluid to circulate around the closed loop of the channel in a continuous flow, as long as the magnetic field and the current flow between electrodes B and C are maintained.

Fluid passing between the poles of a second electromagnet consisting of core I and coil F, positioned as shown so that the fluid flow is perpendicular to its magnetic axis, will, when coil F is energized, induce a

(continued overleaf)

This document was prepared under the sponsorship of the National Aeronautics and Space Administration. Neither the United States Government nor any person acting on behalf of the United States Government assumes any liability resulting from the use of the information contained in this document, or warrants that such use will be free from privately owned rights.

voltage between electrodes D and E.

Adjustment of the magnetic field in magnet H and the current between electrodes B and C will determine the rate of fluid flow, and, for a given fluid flow, adjustment of the magnetic field in magnet I, will determine the voltage induced between electrodes D and E.

Through these adjustments, the output voltage appearing at electrodes D–E may be any desired value regardless of the input voltage impressed at electrodes B–C. Also, through proper control of the magnets, the input circuit may be alternating current while the output circuit is direct current, or vice-versa, and if direct currents only are desired in either circuit, the magnet in that circuit may be replaced with a permanent magnet.

Note:

This development is in conceptual stage only, and, as of date of publication of this Tech Brief, neither a model nor prototype has been constructed.

Patent status:

No patent action is contemplated by NASA.

Source: N. Ratti
of Lear Siegler, Inc.
under contract to
Goddard Space Flight Center
(GSC-10222)

NASA TECH BRIEF

NASA Tech Briefs are issued to summarize specific innovations derived from the U.S. space program, to encourage their commercial application. Copies are available to the public at 15 cents each from the Clearinghouse for Federal Scientific and Technical Information, Springfield, Virginia 22151.

Hydrogen Safety Manual

A Hydrogen Safety Manual has been published which details the technical knowledge and long experience of the NASA Lewis Research Center in the handling and use of hydrogen. NASA and the Lewis Research Center pioneered in liquid hydrogen technology, and continue in the research, development, and use of hydrogen as a rocket fuel and propellant. Experience over many years ranges from basic laboratory research to bulk quantity operational use.

The Hydrogen Safety Manual covers the characteristics and nature of hydrogen, design principles for hydrogen systems, protection of personnel and equipment, and operating and emergency procedures. It is an operating manual which sets forth acceptable standards and practices for minimum safety requirements at the NASA Lewis Research Center. The information in the Hydrogen Safety Manual is believed to be useful for establishing minimum safety requirements for other hydrogen installations.

Notes:

1. The Hydrogen Safety Manual supplements NASA Special Publication 5032, "Handling Hazardous Materials," Chapter 1, "Liquid Hydrogen," by providing considerably more detail and particular specifications.
2. NASA Special Publication 5032, "Handling Hazardous Materials," is a report on the handling of both liquid hydrogen and other hazardous materials utilized as aerospace fuels and oxidizers. Copies may be obtained from the U.S. Government Printing Office, price: $0.45.
3. The Hydrogen Safety Manual, NASA Technical Memorandum X-52454, by the NASA Lewis Research Center Advisory Panel on Experimental Fluids and Gases, 1968, is available from the Clearinghouse for Federal Scientific and Technical Information, Springfield, Virginia 22151.
4. Single copies of the Hydrogen Safety Manual, NASA Technical Memorandum X-52454, may also be requested from:

   Technology Utilization Officer
   Lewis Research Center
   21000 Brookpark Road
   Cleveland, Ohio 44135
   Reference: B68-10323

Patent status:

No patent action is contemplated by NASA.

Source: (LEW-10487)

Category 01

This document was prepared under the sponsorship of the National Aeronautics and Space Administration. Neither the United States Government nor any person acting on behalf of the United States Government assumes any liability resulting from the use of the information contained in this document, or warrants that such use will be free from privately owned rights.

NASA TECH BRIEF

NASA Tech Briefs are issued to summarize specific innovations derived from the U.S. space program, to encourage their commercial application. Copies are available to the public at 15 cents each from the Clearinghouse for Federal Scientific and Technical Information, Springfield, Virginia 22151.

Electrochemical Cell Has Internal Resistive Heater Element

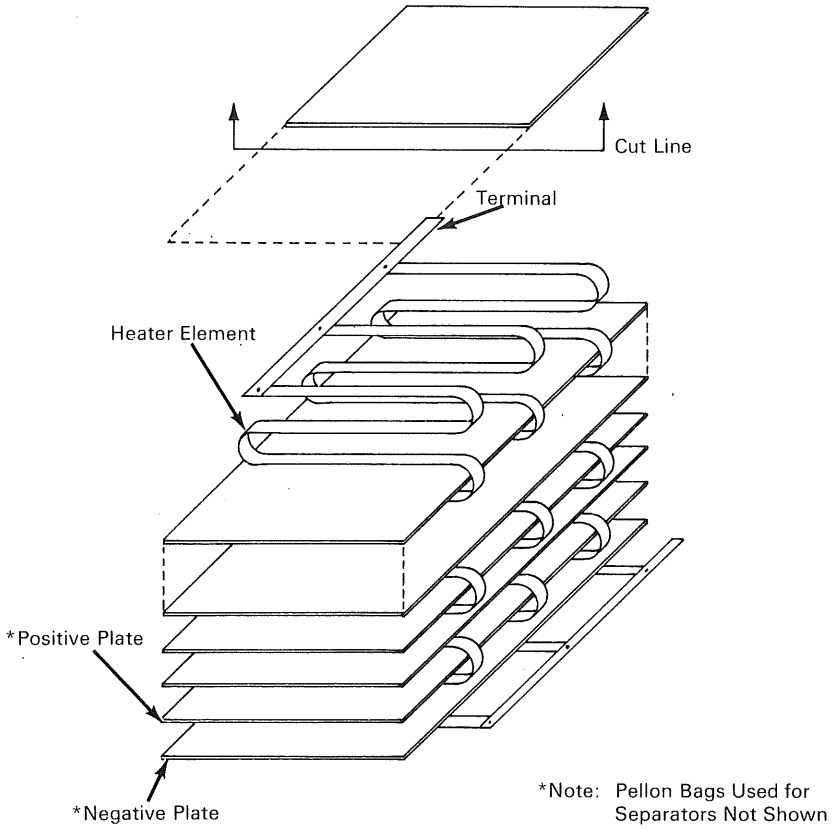

A means has been provided to internally heat electrochemical cells by supplying power from an external source (solar array, power supply, etc.) to a resistive heater element incorporated in the cell construction.

Operation of an electrochemical cell during the charge cycle is such that an endothermic reaction occurs and heat is absorbed. Due to this reaction, the cell, when originally cold, is unable to accept a full charge in the normal charging time and its operational efficiency is thereby impaired. It was therefore determined to investigate the possibility of developing to an operational state the concept of electrochemical cell heater elements, patented by Edison in 1912 but never pursued further.

The prototype developed and constructed during this investigation, differs from that of a conventional

(continued overleaf)

This document was prepared under the sponsorship of the National Aeronautics and Space Administration. Neither the United States Government nor any person acting on behalf of the United States Government assumes any liability resulting from the use of the information contained in this document, or warrants that such use will be free from privately owned rights.

cell in that each plate is individually contained in its own Pellon bag, whereas conventional cell plates are separated by a continuous wrap. This is done to permit the heater element to be arranged in a continuous, parallel circuit, as shown in the figure. While conventional construction could be used, with the heater element interleaved between two continuous Pellon wraps, a certain loss in efficiency would result.

Notes:

1. Although development of this cell construction has been stimulated by the very low temperature conditions encountered in space exploration, its usefulness in the colder regions of the earth is readily apparent.
2. Inquiries concerning this invention may be directed to:

   Technology Utilization Officer
   Goddard Space Flight Center
   Greenbelt, Maryland 20771
   Reference: B68-10325

Patent status:

Inquiries about obtaining rights for the commercial use of this invention may be made to NASA, Code GP, Washington, D.C. 20546.

Source: F. E. Ford, E. F. Colston, and T. J. Hennigan (GSC-10358)

NASA TECH BRIEF

NASA Tech Briefs are issued to summarize specific innovations derived from the U.S. space program, to encourage their commercial application. Copies are available to the public at 15 cents each from the Clearinghouse for Federal Scientific and Technical Information, Springfield, Virginia 22151.

Power Consumption in Acoustic Amplifiers Under Conditions of Maximum Stable Gain

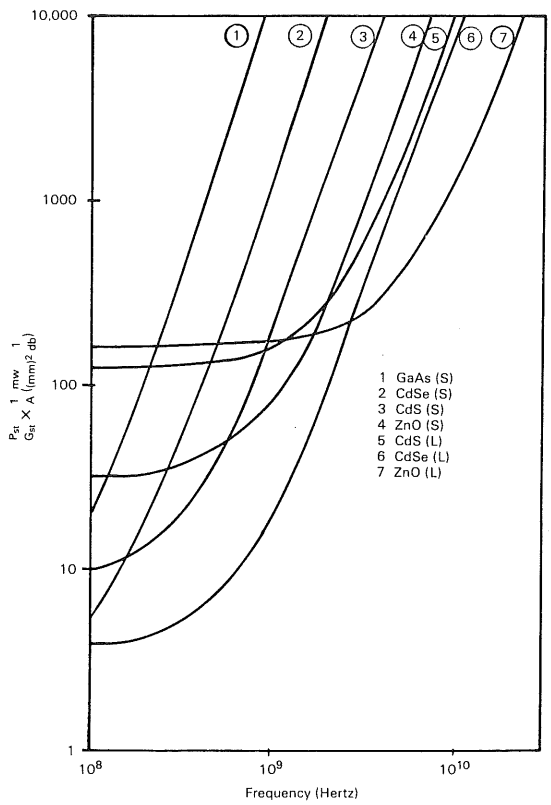

A method has been conceived for comparing the power consumption per db of gain in semiconductors when used as acoustic amplifiers operating under the conditions of maximum stable gain. Several of the commonly used materials have been mathematically compared using this technique.

A comparison is made of the power consumed and the acoustic amplification realized when a dc bias field is placed across a piezoelectric semiconductor and adjusted to amplify a microwave acoustic signal to the point where the forward gain is just equal to the reverse attenuation. This represents the maximum possible gain condition unless some additional form of reverse attenuation is used in the circuit. Above this bias level, the system will break into oscillation and be useless as an amplifier.

The result is a theoretical comparison of various materials and their usefulness in the microwave

(continued overleaf)

This document was prepared under the sponsorship of the National Aeronautics and Space Administration. Neither the United States Government nor any person acting on behalf of the United States Government assumes any liability resulting from the use of the information contained in this document, or warrants that such use will be free from privately owned rights.

frequency range. The figure gives a plot of the power consumed per db of amplification and per unit area of the amplifier, of several pertinent materials, as a function of frequency.

Notes:

1. Only presently available materials, useful in the 100 MHz to 10 GHz frequency range were compared, but the technique can be extended to include other materials and frequency ranges.
2. This development is in conceptual stage only, and, as of date of publication of this Tech Brief, has not been physically reduced to practice.

Patent status:

No patent action is contemplated by NASA.

Source: V. R. Johnson
of Microwave Electronics
under contract to
Goddard Space Flight Center
(GSC-10067)

AEC-NASA TECH BRIEF

AEC-NASA Tech Briefs describe innovations resulting from the research and development program of the U.S. AEC or from AEC-NASA interagency efforts. They are issued to encourage commercial application. Tech Briefs are published by NASA and may be purchased, at 15 cents each, from the Clearinghouse for Federal Scientific and Technical Information, Springfield, Virginia 22151.

Transistorized Marx Bank Pulse Circuit Provides Voltage Multiplication with Nanosecond Rise-Time

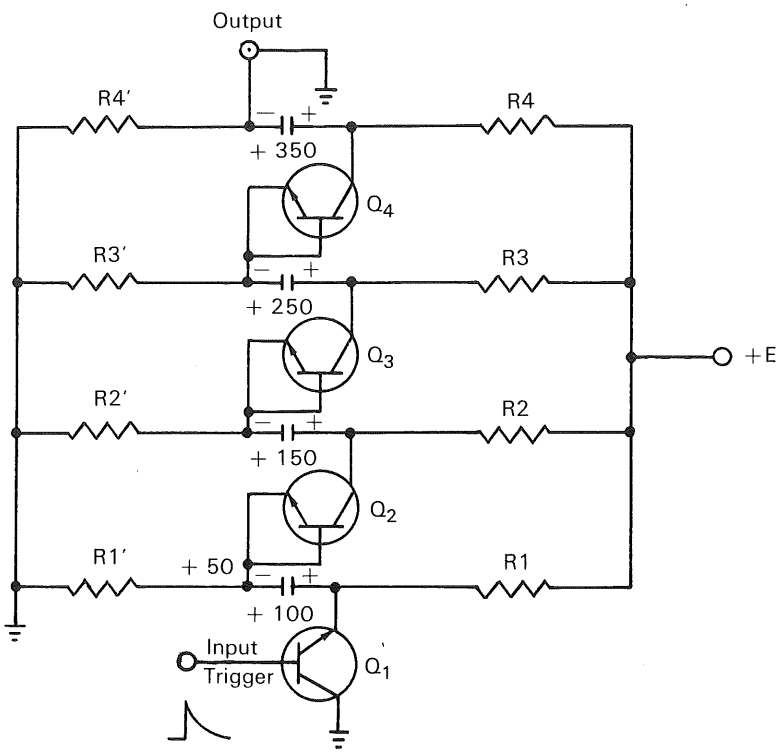

The problem:

To produce a highly reliable, 0 to 1 kilovolt, nanosecond rise-time instrumentation pulse circuit at high pulse repetition rates.

The solution:

A base-triggered avalanche transistor circuit used in a Marx bank pulser configuration. The avalanche-mode transistors replace conventional spark gaps in the capacitor parallel-charging, series-discharging Marx bank.

The delay time from an input signal to the output is typically 6 nanoseconds. Pulse repetition rates of 10,000 pps are possible.

How it's done:

The simplified circuit consists of a base-triggered transistor Q1 and diode-connected avalanche transistors Q2, Q3, and Q4. When Q1 avalanches, the emitter of Q2 goes from +50 V to −50 V, causing the collector–emitter voltage to change from 100 to 200 V. The over-volting causes Q2 to avalanche, and the output

(continued overleaf)

This document was prepared under the sponsorship of the Atomic Energy Commission and/or the National Aeronautics and Space Administration. Neither the United States Government nor any person acting on behalf of the United States Government assumes any liability resulting from the use of the information contained in this document, or warrants that the use of any information, apparatus, method, or process disclosed in this document may not infringe privately owned rights.

voltage across R_L becomes the sum of the voltages across C1 and C2 minus the losses across Q1 and Q2. Similar operation occurs in all subsequent stages, with the delay for each stage becoming progressively less as over-volting increases. The voltage increase per stage is approximately 100 volts. For 10 stages the open circuit output pulse is about 1000 volts and the internal resistance of the device is about 150 ohms. Output pulse current should be limited to 5 amperes to prevent avalanche transistor failure.

Notes:

1. Typical rise-time for the circuit is 2 nsec.
2. Delay is minimized by quiescent threshold biasing, or idling, near the avalanche point. Delay per stage is negligible after approximately 3 stages, and large idling currents become unnecessary.
3. Average power dissipation depends upon pulse repetition frequency, the energy stored in the stage capacitor, the total capacity from collector to ground, and that due to the idling current.
4. The total power dissipated by the transistor may indicate the use of heat sinks in some circuit designs.
5. Additional details are contained in "A Solid State Nanosecond Pulser Using Marx Bank Techniques," by E. A. Jung and R. N. Lewis, *Nuclear Instruments and Methods,* 44 (1966).
6. Inquiries concerning this innovation may be directed to:

   Office of Industrial Cooperation
   Argonne National Laboratory
   9700 South Cass Avenue
   Argonne, Illinois 60439
   Reference: B68-10328

Source: E. A. Jung and R. N. Lewis
Electronics Division
(ARG-10110)

Patent status:

Inquiries about obtaining rights for the commercial use of this innovation may be made to:

Mr. George H. Lee, Chief
Chicago Patent Group
U.S. Atomic Energy Commission
Chicago Operations Office
9800 South Cass Avenue
Argonne, Illinois 60439

NASA TECH BRIEF

NASA Tech Briefs are issued to summarize specific innovations derived from the U.S. space program, to encourage their commercial application. Copies are available to the public at 15 cents each from the Clearinghouse for Federal Scientific and Technical Information, Springfield, Virginia 22151.

Field Effect Transistor (FET) Circuit for Variable Gain Amplifiers

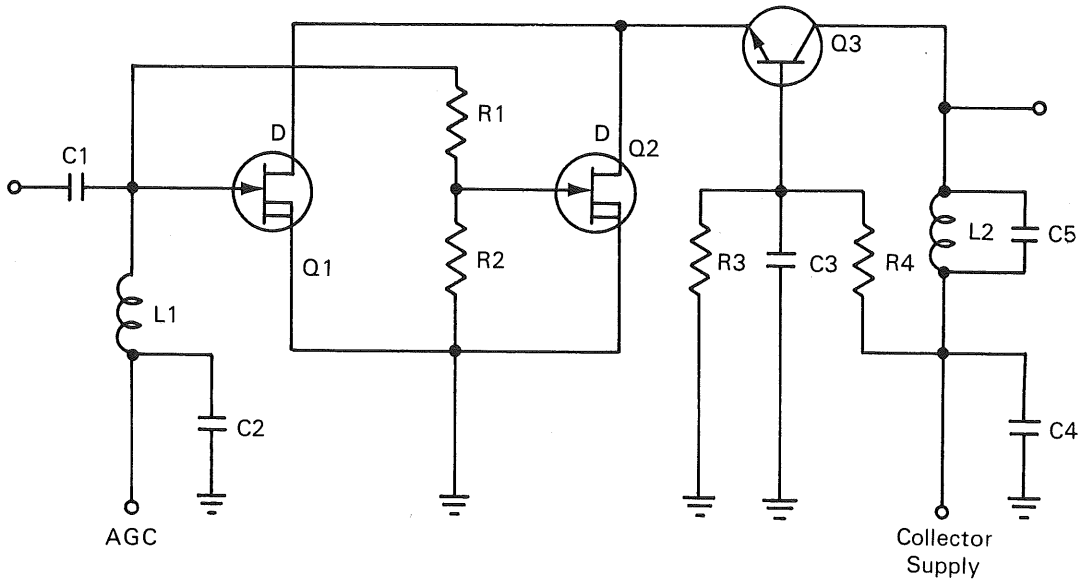

The problem:

To design an amplifier that combines improved input and output impedances with relatively large signal handling capability and an immunity from the usual adverse effects of automatic gain control. While the remote cutoff pentode and some integrated circuits operate in this fashion, they each suffer from major deficiencies. The pentode requires the use of considerable heater power and demands high dc potentials, while integrated circuits lack signal handling capability and are subject to impedance variations with gain control.

The solution:

A circuit that combines the above described advantages through the use of two FETs with sources and drains in parallel plus a resistive divider for signal and bias to either of the gate terminals.

How it's done:

C1 couples the ac signal into the circuit and L1 provides a high impedance to the ac signal and a low impedance path for the AGC potential. C2, C3 and C4 are bypass capacitors to provide low impedance ac signal paths. R3 and R4 provide a bias for the base of transistor Q3. L2 and C5 form a tuned resonant circuit which is a load impedance at the ac operating frequency. R1 and R2 form a resistive divider that divides the ac signal and AGC potential applied to the gate of Q1 and applies the divided signals to the gate of Q2. The two FETs Q1 and Q2 with drains and sources in parallel and their gates

(continued overleaf)

This document was prepared under the sponsorship of the National Aeronautics and Space Administration. Neither the United States Government nor any person acting on behalf of the United States Government assumes any liability resulting from the use of the information contained in this document, or warrants that such use will be free from privately owned rights.

tied together through the resistive divider R1 and R2, produce the remote cutoff feature that makes the circuit perform like a remote cutoff vacuum tube. At low values of AGC bias both FETs Q1 and Q2 contribute to the forward transfer admittance. Since the signal is attenuated, Q2 does not contribute as much to the forward transfer admittance under low values of AGC bias as Q1 does. As the bias is increased, Q1 approaches cutoff more rapidly than Q2 because the bias applied to Q2 is also divided by R1 and R2. As Q1 approaches cutoff, the forward transfer admittance of the circuit becomes controlled by Q2. The AGC bias required to cutoff Q2 is larger than that required to cutoff Q1 by a factor determined by R1 and R2. By selecting the ratio of R1 and R2, the dc transfer characteristic of the FETs can be optimized for a smooth transition of the transfer characteristic or for remoteness of cutoff. Since the signal is divided by the resistors, larger signals may be used as Q2 approaches cutoff for the same amount of distortion in the drain current.

The grounded base transistor Q3 provides a low impedance drain load for Q1 and Q2. The emitter impedance is comparatively low. This factor reduces the reverse energy transfer from drain-to-gate of Q1 and Q2 and therefore, by reducing the Miller effect, reduces input impedance variations as a function of AGC. The reduction of this Miller effect is a very important feature because it virtually eliminates input impedance variations as a function of AGC voltage. This feature is especially important in RF and IF amplifiers where input impedance variations can alter the bandwidth and center frequency of the previous stage. The output impedance of Q3 remains high and minimizes the variations in damping across the load tuned circuit.

Note:

No further documentation is available. Inquiries may be directed to:

Technology Utilization Officer
Goddard Space Flight Center
Greenbelt, Maryland 20771
Reference: B69-10322

Patent status:

Inquiries about obtaining rights for the commercial use of this invention may be made to NASA, Code GP, Washington, D.C. 20546.

Source: Giles H. Spaid
Goddard Space Flight Center
(GSC-10116)

NASA TECH BRIEF

NASA Tech Briefs are issued to summarize specific innovations derived from the U.S. space program, to encourage their commercial application. Copies are available to the public at 15 cents each from the Clearinghouse for Federal Scientific and Technical Information, Springfield, Virginia 22151.

Simultaneous Message Framing and Error Detection

In binary code data transmission systems which are subjected to noise errors, suitable polynomial codes have been previously developed to provide a means for detecting and correcting these errors. In the prior systems utilizing polynomial codes, data bit sequences are encoded by dividing the data bits by a coding polynominal to obtain a quotient with a remainder. The remainder bits comprise the error checking bits and are transmitted following the data bits, the total comprising a message group consisting of n bits. This message is usually preceded by a series of framing bits which mark the beginning of the message. At the receiver, a framing signal obtained from the framing bits is required to clear the decoding circuits and to sense the beginning of a message. The decoder then proceeds to divide the message by the coding polynomial. The remainder of this division will be zero if no errors occurred during the message transmission. The separate framing signal is used in the prior systems to ensure that the decoder circuits are clear of errors caused by spurious noise in the data channel. Such framing wastes message space because a large number of bit positions must be allocated to enable reliable framing.

New message framing and error detection circuitry has been designed to provide a more practical and simplified system for the insertion of framing information in transmitted code groups. Separate message groups are framed without requiring framing bits in addition to error-checking bits. Another advantage is that the new circuitry separates any predetermined message sequence from other message sequences without being hampered by intervening noise.

In one embodiment of the new circuitry, there is provided a shift register decoder for obtaining the remainder of the division of successively received, appropriately encoded message groups of n bits by a coding polynomial. An n-bit buffer stores the most recently received n bits. The contents of the shift register are continually updated by subtracting from the register the effect a bit received n-bit times earlier had on the contents of the shift register each time a new bit is received at the input of the shift register. Thus the shift register always contains the remainder obtained by dividing the contents of the n-bit buffer by the coding polynomial. Whenever the last preceding n bits received correspond to a message sequence, the remainder modulo coding polynomial is zero or some preassigned pattern. The circuitry includes means for continuously testing the contents of the shift register for the preassigned test pattern of "ones" and "zeros." When the pattern appears, the contents of the buffer are gated to the output of the decoder.

Other advantages of the new circuitry are: (1) If synchronization with the incoming messages is lost because of an error condition, synchronization on the next received error-free message will automatically occur. (2) Separate test patterns may be assigned to different transmitters which may all transmit messages simultaneously. Messages associated with only one of several transmitters may be segregated by a decoder by merely selecting the test pattern used by that one transmitter.

(continued overleaf)

This document was prepared under the sponsorship of the National Aeronautics and Space Administration. Neither the United States Government nor any person acting on behalf of the United States Government assumes any liability resulting from the use of the information contained in this document, or warrants that such use will be free from privately owned rights.

Note:

This circuitry should be of interest to designers and users of telemetry systems.

Patent status:

Title to this invention has been waived under the provisions of the National Aeronautics and Space Act [42 U.S.C. 2457 (f)], to the International Business Machines Corporation, 18100 Frederick Pike, Gaithersburg, Maryland 20760.

Source: A. H. Frey, Jr.
of IBM Corporation
under contract to
Manned Spacecraft Center
(MSC-12001)

NASA TECH BRIEF

NASA Tech Briefs are issued to summarize specific innovations derived from the U.S. space program, to encourage their commercial application. Copies are available to the public at 15 cents each from the Clearinghouse for Federal Scientific and Technical Information, Springfield, Virginia 22151.

Automatic, Nondestructive Test Monitors In-Process Weld Quality

A new instrument, which has been developed, automatically and nondestructively monitors the quality of welds produced in the process of microresistance welding of electronic assemblies. This instrument ensures 100 percent nondestructive inspection of the welds on every workpiece, as contrasted with conventional systems which involve either destructive or nondestructive tests on samples taken from the production line after the welding operation is completed.

The new instrument automatically measures the infrared energy generated in the weld as the weld is made on each workpiece and compares this energy with maximum and minimum limits of infrared energy values previously correlated with acceptable weld-strength tolerances. In the experimental correlations performed on more than 17,000 welds of several wire combinations, infrared energy less than a certain value resulted in inadequate weld tensile strength, whereas excessive infrared energy resulted in weld expulsion.

When the infrared energy measured by the instrument is below or above the preset limits, a red indicator light turns on, denoting an unacceptable weld. The instrument then locks out the welding system power supply, preventing further welding until the fault is determined. After the fault is determined and corrected, the inspector can reset the instrument with a key, and welding can resume. When the measured infrared energy falls between the preset limits, a green indicator light turns on momentarily, denoting an acceptable weld.

Notes:

1. This instrument can, in principle, be modified to provide an in-process, closed-loop, weld-control system. This system would control the shape of the weld pulse to ensure optimum weld strength. The system would include a computer incorporating a a generator of a predetermined infrared energy profile, a sensor of the infrared energy generated in the weld, and a welder whose output current would be controlled as a function of the difference between the infrared energy measured as the weld progresses and the standardized energy profile.
2. Complete details may be obtained from:

   Technology Utilization Officer
   Marshall Space Flight Center
   Huntsville, Alabama 35812
   Reference: B68-10333

Patent status:

Inquiries about obtaining rights for the commercial use of this invention may be made to NASA, Code GP, Washington, D.C. 20546.

Source: F. C. Deal
of Martin Marietta Corporation
under contract to
Marshall Space Flight Center
(MFS-14996)

Category 01

This document was prepared under the sponsorship of the National Aeronautics and Space Administration. Neither the United States Government nor any person acting on behalf of the United States Government assumes any liability resulting from the use of the information contained in this document, or warrants that such use will be free from privately owned rights.

NASA TECH BRIEF

NASA Tech Briefs are issued to summarize specific innovations derived from the U.S. space program, to encourage their commercial application. Copies are available to the public at 15 cents each from the Clearinghouse for Federal Scientific and Technical Information, Springfield, Virginia 22151.

Fully Automatic Telemetry Data Processor

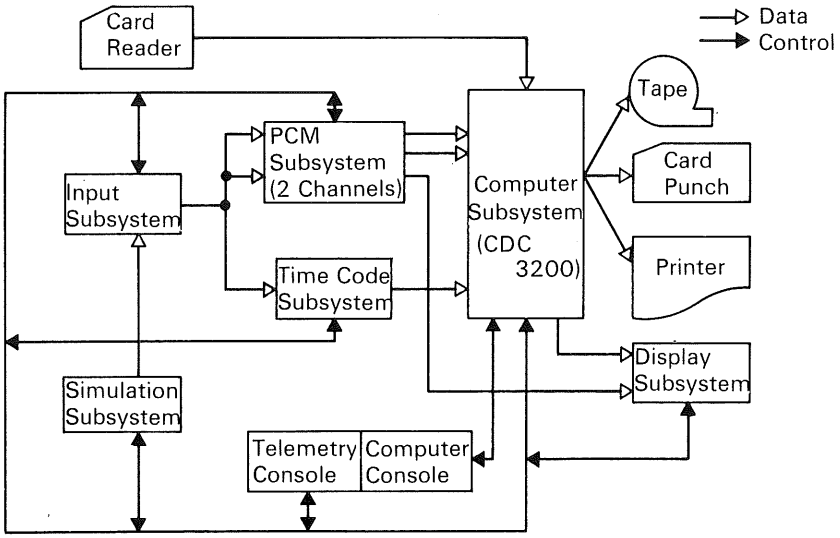

The "Satellite Telemetry Automatic Reduction System" (STARS II), is a fully automatic computer-controlled telemetry data processor. The system incorporates a CDC 3200 computer as its central element, together with facilities for converting and processing telemetry data and ground station time inputs, plus a full complement of simulation equipment. STARS II maximizes data recovery, reduces turnaround time, increases flexibility, and improves operational efficiency. The system encompasses advanced techniques for computer-controlled data processing of high volume telemetry data.

The CDC 3200 general-purpose computer is the basic control element for the complement of signal conditioning, conversion, control, simulation, and computer peripheral equipment. The computer may be used to perform both on- and off-line functions. It is provided with a 16,384-word memory, magnetic tapes, card equipment, and a high-speed line printer.

Note:

Further information concerning this innovation is presented in NASA TND-3981, "A Fully Automatic Satellite Data Processor" by Frank A. Keipert, Richard C. Lee, and Fred B. Cox, May 1967, available from the Clearinghouse for Federal Scientific and Technical Information, Springfield, Virginia 22151; price $3.00 paper copy, $0.65 microfiche. Inquiries may also be directed to:

Technology Utilization Officer
Goddard Space Flight Center
Greenbelt, Maryland 20771
Reference: B68-10336

(continued overleaf)

This document was prepared under the sponsorship of the National Aeronautics and Space Administration. Neither the United States Government nor any person acting on behalf of the United States Government assumes any liability resulting from the use of the information contained in this document, or warrants that such use will be free from privately owned rights.

Patent status:

No patent action is contemplated by NASA.

Source: Frank A. Keipert and Richard C. Lee
of Goddard Space Flight Center
and Fred B. Cox
of Beckman Instrument Company
under contract to
Goddard Space Flight Center
(GSC-10576)

NASA TECH BRIEF

NASA Tech Briefs are issued to summarize specific innovations derived from the U.S. space program, to encourage their commercial application. Copies are available to the public at 15 cents each from the Clearinghouse for Federal Scientific and Technical Information, Springfield, Virginia 22151.

Temperature or Pressure Controller

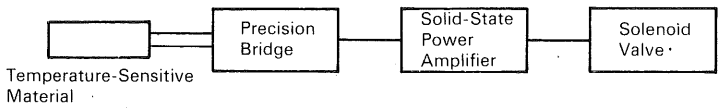

The problem:

A closed-loop temperature controller with higher sensitivity, higher reliability and higher power capacity than any commercially available unit was required to support a combustion research study.

The solution:

A thermally sensitive semiconductor material is employed as a sensor and coupled into a solid-state power control, which operates the propellant valves supplying the system being controlled.

How it's done:

A silicon chip is used as the thermal sensing element. It is embedded in a ceramic support that provides thermal and electrical insulation from the mechanical structure, so that it responds only to the temperature variations in the fluid stream that it is sensing. The sensing element is connected as the variable leg of a high-resistance bridge which, in turn, provides the operating signal to the solid state power amplifier that supplies the actuating current for control purposes. The unit measures temperatures from −423°F to +500°F. For gas stream temperatures between −100° and 0°F, control sensitivity better than 1°F was obtained. The amplifier output was 10 amperes into an inductive load on a 28 vdc facility valve circuit.

The very small mass of the sensing element provides immediate response, and its large change of resistance with temperature produces a strong output signal from the bridge (≈15 mv/degree F with 20 vdc input).

Notes:

1. This system can also be used as a low-pressure controller by using a polymeric sensing element, which changes resistance with pressure. The range is adjustable from 3–10 psig. This technique is directly applicable to many automation systems where low pressure processing requires critical control of feed stream pressures. The elimination of the conventional electromechanical coupling components increases the reliability of the system.
2. Inquiries concerning this innovation may be directed to:

   Technology Utilization Officer
   Lewis Research Center
   21000 Brookpark Road
   Cleveland, Ohio 44135
   Reference: B68-10337

Patent status:

No patent action is contemplated by NASA.

Source: J. D. Gillett
of North American Rockwell Corporation
under contract to
Lewis Research Center
(LEW-10297)

Category 01

This document was prepared under the sponsorship of the National Aeronautics and Space Administration. Neither the United States Government nor any person acting on behalf of the United States Government assumes any liability resulting from the use of the information contained in this document, or warrants that such use will be free from privately owned rights.

NASA TECH BRIEF

NASA Tech Briefs are issued to summarize specific innovations derived from the U.S. space program, to encourage their commercial application. Copies are available to the public at 15 cents each from the Clearinghouse for Federal Scientific and Technical Information, Springfield, Virginia 22151.

Superconductive Thin Film Makes Convenient Liquid Helium Level Sensor

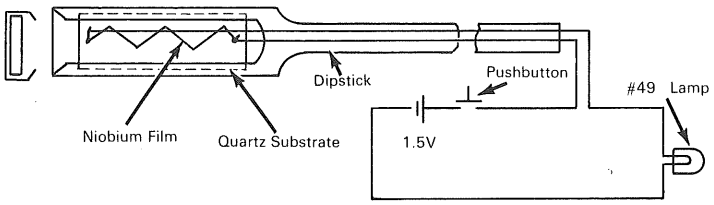

A convenient sensor for measuring the level of liquid helium in a Dewar flask consists of a superconductive film mounted on a dipstick. The sensor is made by depositing a thin film of niobium metal to a thickness of approximately 2000 angstroms on a quartz substrate, which is then mounted on a graduated dipstick. The film deposition is carried out, on the substrate at 600°F, in a vacuum of approximately 10^{-6} torr (with an electron beam evaporation source) at an evaporation rate of approximately 1500 angstroms per minute. These conditions are required to obtain large crystallites in the niobium thin film for onset of superconductivity slightly above 4.2°K (temperature of boiling liquid helium). For a sensor on a quartz substrate measuring $1/16 \times 3/8 \times 1$ inch, the electrical resistance of the device is 200 ohms at room temperature.

To use the sensor as a gage for measuring the level of liquid helium, the niobium film is connected in series with a 1.5 volt battery, a No. 49 indicating lamp, and a normally open pushbutton switch. With the pushbutton closed, the top of the dipstick is held with thermally insulated gloves and the sensor is slowly and cautiously lowered into the Dewar until the indicator lamp lights. At this point, contact of the sensor with the liquid helium surface reduces the temperature of the sensor to that of the liquid helium and the resistance of the sensor suddenly falls to zero, permitting sufficient current from the battery to light the lamp. The reading on the dipstick then corresponds to the liquid level. Once turned on, the lamp will remain lit (with the switch closed) as long as the sensor is immersed in the liquid or is surrounded by helium vapor immediately above the liquid surface. To obtain a second level reading, the sensor is lifted a few inches above the liquid surface so that the lamp will automatically extinguish. The dipstick is again lowered into the Dewar flask until the lamp again turns on, indicating contact of the sensor with the liquid surface. A second level reading is taken on the dipstick, as in the first measurement, and the two readings are averaged. By this method, the level or depth of the liquid helium may be measured to an accuracy of ±0.25 inch.

Note:

Details may be obtained from:

Technology Utilization Officer
Langley Research Center
Langley Station
Hampton, Virginia 23365
Reference: B68-10341

Patent status:

Inquiries about obtaining rights for the commercial use of this invention may be made to NASA, Code GP, Washington, D.C. 20546.

Source: H. H. Becker
(LAR-10289)

Category 01

This document was prepared under the sponsorship of the National Aeronautics and Space Administration. Neither the United States Government nor any person acting on behalf of the United States Government assumes any liability resulting from the use of the information contained in this document, or warrants that such use will be free from privately owned rights.

AEC-NASA TECH BRIEF

AEC-NASA Tech Briefs describe innovations resulting from the research and development program of the U.S. AEC or from AEC-NASA interagency efforts. They are issued to encourage commercial application. Tech Briefs are published by NASA and may be purchased, at 15 cents each, from the Clearinghouse for Federal Scientific and Technical Information, Springfield, Virginia 22151.

Indium Adhesion Provides Quantitative Measure of Surface Cleanliness

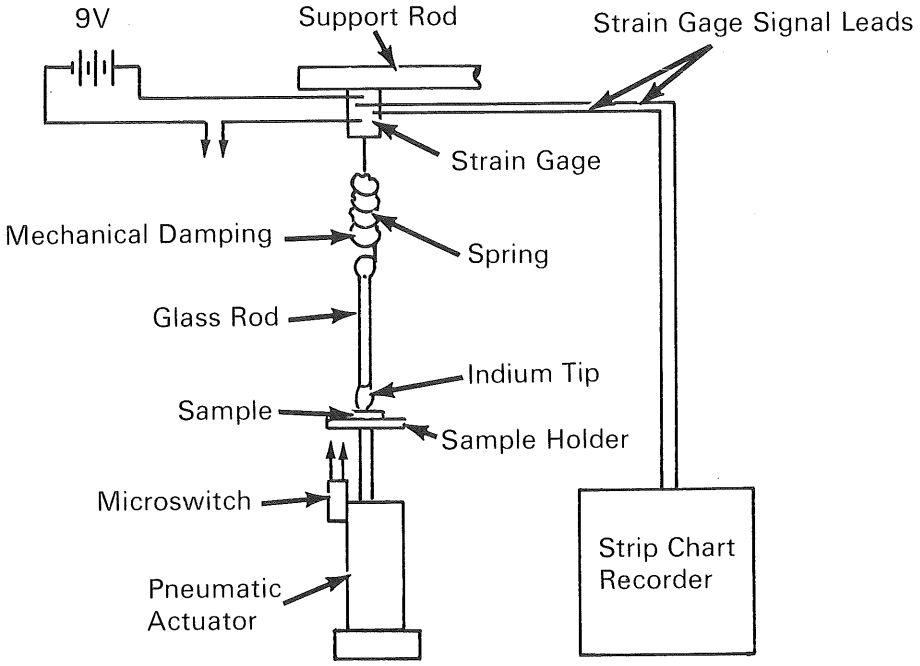

The problem:

To develop a means of measuring surface cleanliness that detects hydrophobic as well as hydrophilic contaminants, that can be used on rough as well as smooth surfaces, and that gives quantitative results.

The solution:

Adhesion between solids will occur if one of the substances is soft and if their interfacial energy is less than the sum of their individual surface energies. Therefore, a small amount of indium, a very soft material which does not work-harden, on the tip of a probe will adhere to a clean surface. The force needed to pull the indium tip away from the surface provides a quantitative measure of cleanliness.

How it's done:

Indium is melted in a ceramic crucible and then maintained at a temperature of 160° to 175°C. The indium surface must be skimmed before it is applied to the probe tip. One end of a clean pyrex glass rod is heated in a blue flame to a temperature just below the softening point of the rod. It is then cooled to below 200°C, dipped into the molten indium, and quickly withdrawn. The end of the resultant indium droplet must be broken off with tweezers in order to provide a fresh indium surface. The freshly formed surface must be used within two minutes.

The cleanliness testing should be performed in a reasonably clean area with the relative humidity below

(continued overleaf)

This document was prepared under the sponsorship of the Atomic Energy Commission and/or the National Aeronautics and Space Administration. Neither the United States Government nor any person acting on behalf of the United States Government assumes any liability resulting from the use of the information contained in this document, or warrants that the use of any information, apparatus, method, or process disclosed in this document may not infringe privately owned rights.

60%. The indium-tipped rods and the test specimen must be at a temperature between 20° and 35°C. The test specimen and the glass rod are both placed in their holders, and the measuring apparatus activated. The specimen is fastened to a table-like holder which is mounted on a pneumatic actuator. The specimen is raised until it presses perpendicularly against the indium tip. The specimen is then allowed to fall by gravity at a uniform rate limited by the pneumatic actuator. A strain gauge measures the force on the indium tip through a coil spring that translates the forces applied into motions large enough to be easily controlled. Mechanical damping of the spring prevents oscillations in the system. The signal from the strain gauge is fed to a strip chart recorder.

The coefficient of adhesion (σ), the ratio of the tensile force for adhesive failure to the joining force, provides numerical results of cleanliness testing ranging from 0 for dirty surfaces to as high as 1 for clean ones. A well-defined maximum value of σ is obtained with a joining force of 10 grams, with little effect from creep if contact is maintained for less than 10 seconds. Normal variations in room temperature are not critical. Sensitivity is enhanced by repetitive cycling with the same indium tip applied several times to the specimen.

Notes:

1. Satisfactory results were obtained in evaluation tests with a joining force of 10 ± 1 grams, 5-cycle testing, and temperature of 23 ± 2°C. Materials chosen for test surface specimens included fabricated Kovar and type 304 stainless steel, unglazed ceramics, monocrystalline sapphire, and both optically polished and ground glass. Results of tests on the clean surfaces showed a variation of less than 10 percent. Contamination levels from several monolayers to less than one monolayer may be detected.
2. Cleanliness of low-surface-energy materials, such as teflon, may not be tested directly, but may be inferred from the behavior of an indium tip used with a clean reference surface after having been pressed against the surface of the low energy material. In this case the σ value will depend upon the cleanliness of the surface of the original low-surface-energy specimen. The exact relationship, however, between the high- and low-surface-energy test specimens is not well defined as is the direct method, and will depend to a great extent upon the exact nature of the contaminant involved.
3. Inquiries concerning this innovation may be directed to:

   Sandia Office of Industrial Cooperation
   Sandia Laboratories
   Post Office Box 5800
   Albuquerque, New Mexico 87115
   Reference: B68-10342

Patent status:

No patent action is contemplated by AEC or NASA.

Source: G. L. Krieger and G. J. Wilson
(SAN-10024)

NASA TECH BRIEF

NASA Tech Briefs are issued to summarize specific innovations derived from the U.S. space program, to encourage their commercial application. Copies are available to the public at 15 cents each from the Clearinghouse for Federal Scientific and Technical Information, Springfield, Virginia 22151.

Fluidic-Thermochromic Display Device

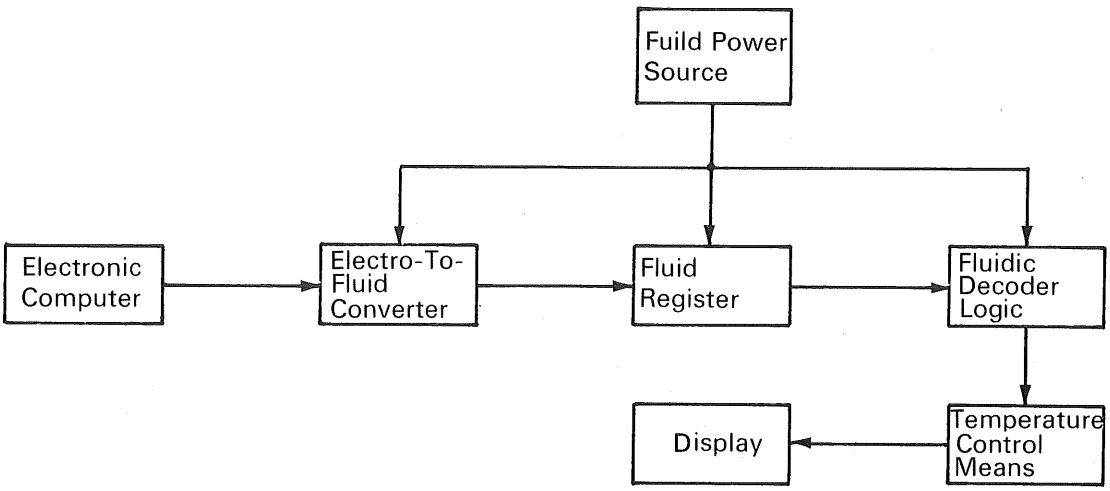

The problem:

Fluidic logic, because of its high reliability and potentially low cost, offers interesting possibilities for the generation of an interface between sensors or computers and displays, but the use of moving parts in a display immediately offsets the reliability inherent in the fluidics. Alternatively, the use of fluidic elements to control any sort of self-emitting display poses readability problems in airborne vehicles when direct sunlight impinges on the display.

The solution:

A concept has been developed to use the fluidics for temperature control of thermochromic materials; i.e. those which change color upon exposure to heat and revert to their original color when cooled. This not only eliminates requirements for any moving parts, but also provides a display readily observable under high ambient illumination levels, since the color change in the materials is due to differential reflection rather than to light emission.

How it's done:

The figure shows a model of a fluidic decoder and display device built as part of a NASA-sponsored study contract on fluidic displays.

The function of the electro-to-fluid converter is to translate the incoming electrical signals into pneumatic signals of sufficient power to operate the fluidic logic elements in the remaining part of the decoder and display device. The converter operates on typical small computer output signals, e.g. 20-volt, 1 milliampere square wave of 15-millisecond duration. The amount of pneumatic power required to obtain switching flow for the miniature fluidic elements is small. These low-power requirements make it possible to consider several concepts of electrofluid interface devices. The most promising device is a pneumatic flapper valve in which a piezoelectric crystal is used to open and close a small orifice. The pressure changes obtainable with this miniature device are sufficient to switch a miniature fluidic gate. The latest model of

(continued overleaf)

This document was prepared under the sponsorship of the National Aeronautics and Space Administration. Neither the United States Government nor any person acting on behalf of the United States Government assumes any liability resulting from the use of the information contained in this document, or warrants that such use will be free from privately owned rights.

this device has been operated with an input as low as 10 volts dc. Because the amount of power required to switch the fluidic elements is extremely small, the necessary movement of the piezoelectric crystal can be obtained without using electronic oscillators and step-up transformers, a significant improvement over prior practice.

The function of the fluid register is to store the binary information supplied by the computer via the electrofluid interface, for further processing. The register consists of fluidic flip-flops that perform the function of a memory. The register input is obtained from two parallel pneumatic inputs: one input is a clock pulse; the second input contains the binary information. The register is actually a 16-bit fluidic shift register.

The decoder logic module transforms the binary information into corresponding signals to the readouts. The decoder logic gates are formed in sheets of 0.004-inch-thick copper by a chemical etching process. Each etched plane contains two logic gates. The complete decoding logic block is formed by diffusion bonding of interconnecting planes and element planes into one integrated assembly measuring approximately 1.2 by 1.0 by 0.4 inches. The integrated bonded assembly is free from leakage paths, which are common causes of malfunctions in conventional fluidic circuitry, and the small interconnections have resonant frequencies far above the response time of even the comparatively fast miniature fluid gates, thus eliminating another problem so often experienced with larger fluidic logic element assemblies.

Considerable difference in time cycles can be obtained by changing some of the dimensions of internal channels, etc., since the obtainable minimum time intervals between updates are largely dependent on the thermal capacity of the immediate environment of the thermochromic material.

Notes:

1. The materials on which this device is based have been developed under contract by NASA and reported in NASA publications CR-80016 and CR-86031 available from the Clearinghouse for Federal Scientific and Technical Information, Springfield, Virginia 22151, price $3.00 (microfiche $0.65)
2. Inquiries concerning this invention may be directed to:

   Technology Utilization Officer
   Electronics Research Center
   575 Technology Square
   Cambridge, Massachusetts 02139
   Reference: B68-10350

Patent status:

This invention is owned by NASA, and a patent application has been filed. Royalty-free, nonexclusive licenses for its commerical use will be granted by NASA. Inquiries concerning license rights should be made to NASA, Code GP, Washington, D. C. 20546.

Source: Edwin H. Hilborn
and Daniel Grafstein
(ERC-10031)

NASA TECH BRIEF

NASA Tech Briefs are issued to summarize specific innovations derived from the U.S. space program, to encourage their commercial application. Copies are available to the public at 15 cents each from the Clearinghouse for Federal Scientific and Technical Information, Springfield, Virginia 22151.

Closed Circuit TV System Automatically Guides Welding Arc

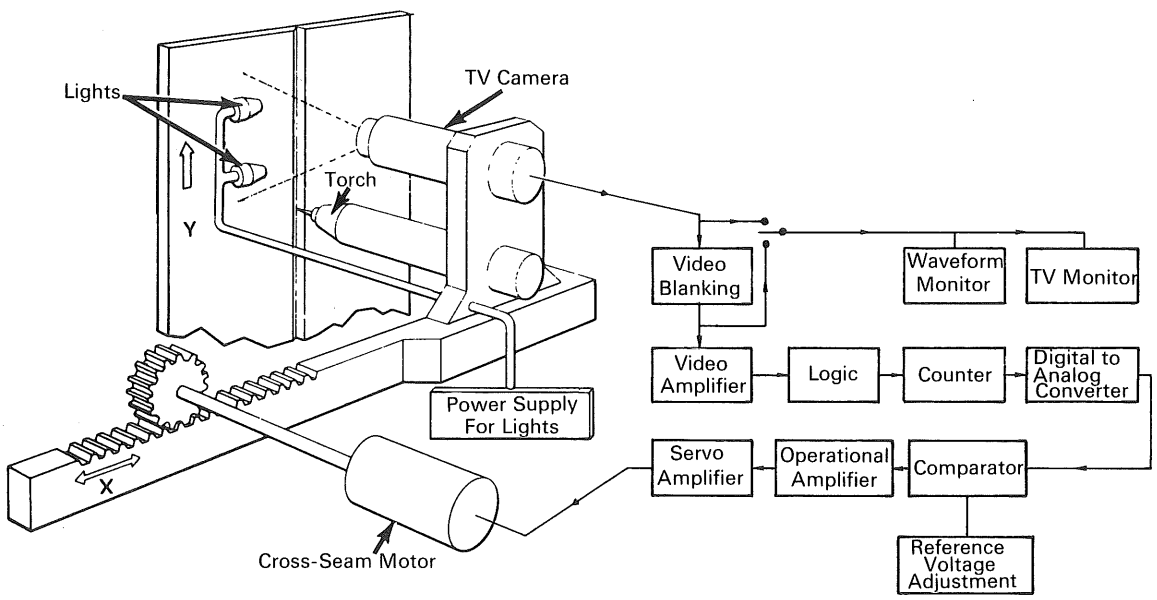

A closed circuit television (CCTV) system, which has been developed in prototype form, will automatically guide a welding torch to position the welding arc accurately along weld seams. Digital counting and logic techniques are incorporated in the control circuitry to ensure performance reliability. Several commercially available welding systems with automatic arc guidance features have a number of disadvantages, which include limited applicability regarding the types of material to be welded, susceptibility to stray electrical signals, delicate setup, restricted field of view, or tendency to contaminate the weld seam. The CCTV system not only overcomes the deficiencies of these systems, but also has the added advantage of being able to track tack-welded joints. Many large, complex parts are now tack-welded prior to being subjected to automatic welding, and this is when use of an effective automatic arc guidance system is highly desirable.

The basic CCTV welding arc guidance system is represented in the diagram. This system functions to maintain the welding arc on the weld seam as the area to be welded moves past the torch in the Y direction. The CCTV camera is mounted so that its axis is parallel to the axis of the torch; the camera is positioned so that the weld centerline runs horizontally, left to right, as viewed on the TV monitor. Since the weld seam centerline is parallel to the horizontal lines of the TV scan, the centerline image will mainly occupy only one scan line, as viewed on the TV monitor. Proper arrangement of lighting on the weld seam by two bright light sources will cause this video scan line to be much brighter than the other lines. This

(continued overleaf)

This document was prepared under the sponsorship of the National Aeronautics and Space Administration. Neither the United States Government nor any person acting on behalf of the United States Government assumes any liability resulting from the use of the information contained in this document, or warrants that such use will be free from privately owned rights.

extra-bright line in the video signal is easily separated from the composite video signal and is used for guidance purposes. In operation, the composite video signal from the TV camera is first routed to TV (video viewing) and waveform monitors and then to a blanking circuit to remove unwanted portions of the signal. Next, the signal is amplified to raise its voltage and power to a level that can be used by the logic section. Logic circuits then separate the video information from the synchronizing pulses to control a binary counter. Because of the control in the logic circuit, the counter will begin counting at the top of the TV field and will then count each successive horizontal line (1, 2, 3 . . .) until the bright line caused by the weld seam illumination is sensed. Appearance of the bright line stops the counter on that horizontal line number. This number is then stored in a flip-flop register and the counter is reset for operation during the scanning of the next TV field. The stored horizontal line number in the register is fed to a digital-to-analog (D–A) converter which converts the number to a proportional dc voltage. This voltage representation of the stored number is then algebraically summed in the comparator with a reference voltage. The latter can be manually set to a level corresponding to any scan line position desired; however, it is usually set to a level near the center of the field of view. If the dc output voltage of the D–A converter is either less than or greater than the reference dc voltage, the difference between the two voltages will be a plus or minus dc error signal to the torch-positioning servo amplifier. An error signal to the servo amplifier causes it to drive the motor in a direction that will move the camera-torch carriage along the X axis. Polarity of the error signal to the servo amplifier determines the direction and the distance that the camera-torch carriage will move until the error difference is nulled. New error information is received much more rapidly than the carriage can move, because the counter is counting and supplying new tracking data each time a TV field is scanned. Since the TV field is scanned 60 times per second, the counter will supply new tracking data each 1/60th of a second. A continuous and rapid supply of position information allows the servo system to guide the welding arc along the weld centerline.

Notes:

1. The system is being developed to track (1) highly irregular weld seams without track welds, (2) moderately irregular seams with tack welds, and (3) butt joints, overlap joints, or tee joints.
2. The surface condition of the workpieces (bright, dull, painted, rusty, etc.) generally has no effect on the operation; however, some joint preparation is necessary to assure success.
3. Complete details may be obtained from:
   Technology Utilization Officer
   Marshall Space Flight Center
   Huntsville, Alabama 35812
   Reference: B68-10357

Patent status:

This invention is owned by NASA, and a patent application has been filed. Royalty-free, nonexclusive licenses for its commercial use will be granted by NASA. Inquiries concerning license rights should be made to NASA, Code GP, Washington, D.C. 20546.

Source: W. A. Wall, Jr.
of Marshall Space Flight Center
and Douglas L. Stephans
of Hayes International Corporation
under contract to
Marshall Space Flight Center
(MFS-20084)

NASA TECH BRIEF

NASA Tech Briefs are issued to summarize specific innovations derived from the U.S. space program, to encourage their commercial application. Copies are available to the public at 15 cents each from the Clearinghouse for Federal Scientific and Technical Information, Springfield, Virginia 22151.

An Unconventional Magnetically-Coupled Multivibrator

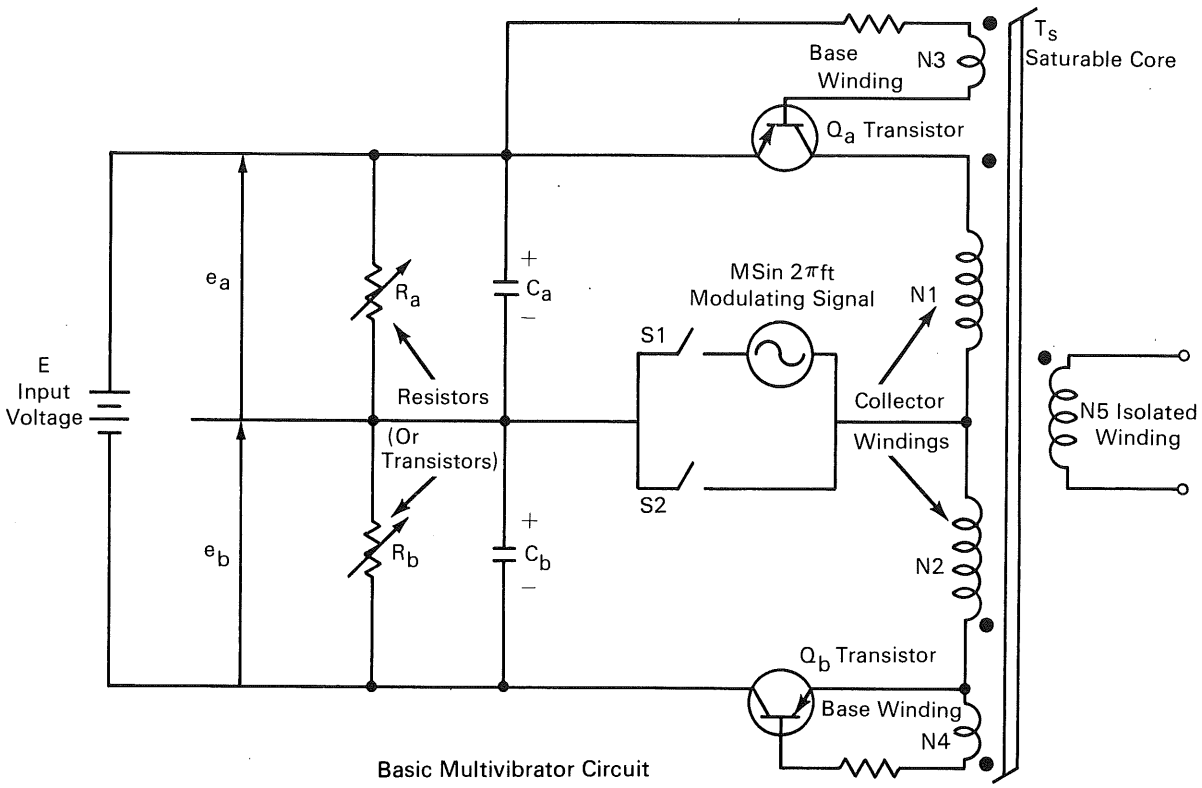

Basic Multivibrator Circuit

This physically simple, highly efficient innovation should be interesting to manufacturers of electronic power supplies and voltage converters and to technical personnel working in the field of static power conversion. Two primary functions of the multivibrator are that the circuit can act as a voltage-to-duty-cycle generator for nondissipatively regulated dc to dc converters; and with slight modification, the circuit can be used as a high-frequency pulse-width modulator for controlling a dc to low-frequency sinusoidal ac inverter. In addition, the duty-cycle generator is suitable for speed control of dc motors, while the pulse-width modulator, when properly combined with other power-handling circuits, can be used as a switching-mode linear amplifier (the dc to sinusoidal ac inverter is a special case where the signal happens to be a sine wave.)

The basic multivibrator circuit, shown in the figure, provides a low-frequency sine wave output without using a low-frequency power transformer or filter

(continued overleaf)

This document was prepared under the sponsorship of the National Aeronautics and Space Administration. Neither the United States Government nor any person acting on behalf of the United States Government assumes any liability resulting from the use of the information contained in this document, or warrants that such use will be free from privately owned rights.

components. The circuit utilizes two transistors and a magnetic core with a rectangular B-H characteristic, representing a reduction in complexity, size, and weight over similar units. The semiconductor and magnetic elements of the multivibrator are transistors Q_a, Q_b and a saturable core T_s. Collector windings N1 and N2 have an equal number of turns; base windings N3 and N4 are also equal. Any number of isolated windings, such as N5, can be provided for multiple outputs. The direct voltage supplying power to the two halves of the multivibrator is obtained by dividing the input voltage E into two components, e_a and e_b. The division of voltage is accomplished through C_a and C_b in parallel with R_a and R_b (either resistors or transistors); impedances can be held fixed or varied through standard control techniques. With S1 closed and S2 opened, the circuit performs the function of a voltage-to-cycle generator. With S1 opened and S2 closed and with $R_a = R_b$ and $C_a = C_b$, the circuit performs the functions of a pulse-width modulator with the sinusoidal reference M Sin 2π ft serving as a modulating signal.

Note:

Requests for further information may be directed to:

Technology Utilization Officer
Headquarters
National Aeronautics and Space Admin.
Washington, D.C. 20546
Reference: TSP69-10480

Patent status:

No patent action is contemplated by NASA.

Source: Yuan Yu and Edward T. Moore of
Duke University
under contract to
NASA Headquarters
(HQN-10226)

NASA TECH BRIEF

NASA Tech Briefs are issued to summarize specific innovations derived from the U.S. space program, to encourage their commercial application. Copies are available to the public at 15 cents each from the Clearinghouse for Federal Scientific and Technical Information, Springfield, Virginia 22151.

Rating of Electrical Wires in Vacuum Environments

An analytical and experimental investigation has shown that electrical conductors to be used in vacuum environments can be of smaller cross section (lighter weight) than previously prescribed following standard design guides.

Details of the investigation are available in a report which provides data on heat transfer and current-carrying capacity of wire and wire bundles. The data are arranged to facilitate design engineering selection of the correct wire size for a required current load in free-air, low-pressure oxygen, and vacuum environments. Curves relating the current for single wires and wire bundles to temperature permit the designer to determine the maximum allowable current for a given ambient temperature and maximum conductor temperature.

Note:

Copies of the report may be obtained from:
Technology Utilization Officer
Manned Spacecraft Center
Houston, Texas 77058
Reference: B68-10362

Patent status:

No patent action is contemplated by NASA.

Source: J. L. Schaefer and F. C. Svenson of North American Rockwell Corporation under contract to Manned Spacecraft Center (MSC-15108)

Category 01

This document was prepared under the sponsorship of the National Aeronautics and Space Administration. Neither the United States Government nor any person acting on behalf of the United States Government assumes any liability resulting from the use of the information contained in this document, or warrants that such use will be free from privately owned rights.

NASA TECH BRIEF

NASA Tech Briefs are issued to summarize specific innovations derived from the U.S. space program, to encourage their commercial application. Copies are available to the public at 15 cents each from the Clearinghouse for Federal Scientific and Technical Information, Springfield, Virginia 22151.

Nondestructive Test Determines Overload Destruction Characteristics of Current Limiter Fuses

A nondestructive test method has been devised to predict the clear time of electrical current limiters, that is the time required for the current limiters to blow (open the circuit) when subjected to a given overload (e.g., two, four, or six times the rated current of the limiters in this application). This method provides a reliable means for predicting the clear time of individual current limiters under overload conditions and for quality control of production-lot quantities of these units. Standard nondestructive electrical measurements have not been capable of accurately predicting the clear times of overload current limiters. In one destructive method commonly used, one or more units from each production lot are subjected to actual overloads for the time required to open the circuit. This test is unreliable because it not only destroys the current limiters sampled, but also assumes that all of the units in each production lot have the same characteristics as the samples tested to destruction.

The new test method is based on an empirical relationship between the voltage rise across a current limiter for a fixed time interval (and fixed current overload) and the time to blow. The tester consists of crystal controlled precise time bases for controlling square wave current pulses. The limiter is subjected to these square wave current pulses of controlled time duration of length such that clearing of the fuse will not result. This test will insure that the limiter will withstand transients without clearing. Voltage wave forms across the limiter are monitored during the test with an oscilloscope.

In order to determine the relationship of the clear time to the voltage rise characteristic, a representative number of current limiters are each subjected to a pulse corresponding to the specified overload condition, and the resulting voltage rise characteristics are measured from the oscillograph. The duration of the pulse applied to each of the limiter units in this (first) stage of the test must be sufficiently short to avoid blowing or damaging the units. The same limiters are then each subjected to a voltage pulse of the same height (corresponding to the same overload condition) as in the previous measurement, but for a sufficient time to blow the units (to open the circuit). The resultant measured clear times values are then plotted against the measured pulse heights to obtain a least square-fit regression line. Any desired number of current limiters of the same type (from the same lot) may then be nondestructively tested by measuring the pulse height of each unit as in the first stage. The measured pulse height for each unit is then used to determine the corresponding clear time from the regression line.

Note:

This nondestructive test method may be applicable to other electrical components exhibiting dynamic characteristics which are power-limited.

Patent status:

Title to this invention has been waived under the provisions of National Aeronautics and Space Act [42 U.S.C. 2457(f)], to the Electra-Midland Corporation, Independence, Kansas.

Source: G. A. Swartz
of Electra-Midland Corporation
under contract to
Goddard Space Flight Center
(XGS-08566)
Category 01

This document was prepared under the sponsorship of the National Aeronautics and Space Administration. Neither the United States Government nor any person acting on behalf of the United States Government assumes any liability resulting from the use of the information contained in this document, or warrants that such use will be free from privately owned rights.

NASA TECH BRIEF

NASA Tech Briefs are issued to summarize specific innovations derived from the U.S. space program, to encourage their commercial application. Copies are available to the public at 15 cents each from the Clearinghouse for Federal Scientific and Technical Information, Springfield, Virginia 22151.

Automatic Patient Respiration Failure Detection System with Wireless Transmission

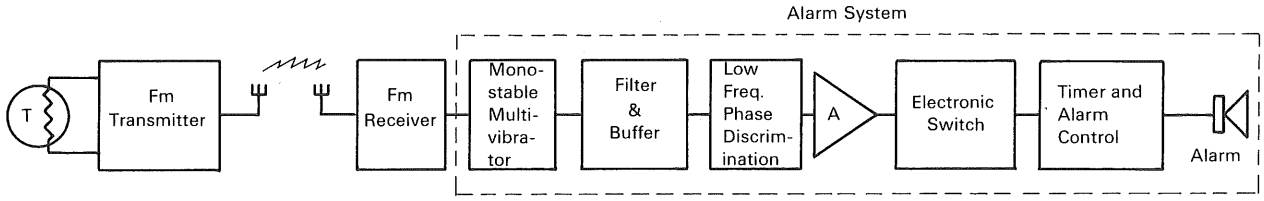

The problem:

Infants or comatose children and adult patients sometimes require a tracheostomy tube which is surgically implanted in the patient's windpipe to ease breathing difficulties. Because of the ever present danger of the tube becoming clogged and suffocation resulting, a continuous visual watch by a nurse is required to detect respiration failure and to take immediate corrective action. This is not only expensive, but even with continuous surveillance, there is always the possibility that the nurse might be distracted for the short interval (2–4 minutes) necessary for brain damage or death to result from lack of sufficient oxygen.

The solution:

An automatic Respiration Failure Detection System which immediately recognizes respiration failure or partial failure and ten seconds later, actuates an audible and/or visual alarm. The system incorporates a miniature radio transmitter so that the patient is unencumbered by wires yet can be monitored from a remote location such as a nurse's station or a room other than the patient's room at home.

How it's done:

The temperature sensor–FM transmitter is attached directly to the tracheostomy tube, thereby allowing the inspired and expired air to flow directly over a thermistor temperature sensor. This sensor responds to differences in the temperature of the airflow through changes in its resistance. The FM transmitter has a nominal subcarrier pulse frequency which increases as the thermistor resistance decreases with increasing temperature. An FM receiver is used to receive the respiration signal. The pulsed receiver output is used to trigger the alarm system. The first stage in the alarm system is a monostable multivibrator which provides amplitude discrimination against changes in the level of the receiver output signal. This output is filtered, buffered by an emitter follower and coupled to a low frequency phase discriminator which serves as a frequency-to-voltage converter. The voltage changes caused by respiration are amplified with an adjustable gain of approximately 2 to 23 and are used to actuate an electronic switch which provides a reset pulse for each respiratory cycle considered to be of sufficient length (as determined by the setting of the amplifier gain control). The reset pulse is used to discharge a capacitor that serves as the timing element of the alarm control. If the capacitor does not receive a reset pulse for a preselected time (arbitrarily chosen to be 10 seconds), the alarm control actuates an audible and/or visual alarm. A "Reset-Normal" switch is provided that turns off the alarm when placed in the "Reset" position and allows 1½ minutes to clear any obstruction in the tracheostomy tube. At the end of this time interval, the alarm will sound

(continued overleaf)

This document was prepared under the sponsorship of the National Aeronautics and Space Administration. Neither the United States Government nor any person acting on behalf of the United States Government assumes any liability resulting from the use of the information contained in this document, or warrants that such use will be free from privately owned rights.

again and will continue to operate until the "Reset-Normal" switch is again placed in the "Normal" position and a proper respiratory signal is received.

Notes:

1. The system could be used to monitor normal nose-mouth breathing by the use of an air-directing mask which directs the flow of respiratory air across the thermistor temperature sensing element.
2. Since the lead length of the thermistor is "non-critical" to circuit operation, the thermistor need not be located near the transmitter. Any cyclic point temperature could be monitored for gross variations and could be used to trigger the alarm system if arbitrary limits are exceeded.
3. A prototype system has been assembled largely from components developed for space research purposes. First trials of this equipment to monitor the respiration of human patients have been conducted at Children's Hospital Medical Center, Oakland, California after initial experiments on a young dog. The patients, all children, had tracheostomy tubes implanted and ranged in age from 6 weeks to 4 years. These trials, conducted under continuous monitoring by a doctor or a nurse, are continuing with excellent results. An indication of the sensitivity of the apparatus is provided by the fact that it was successfully used to monitor the respiration of a six-week old child that was housed in an isolette where the temperature is maintained at 85°F.
4. Inquiries concerning this invention may be directed to:

   Technology Utilization Officer
   Ames Research Center
   Moffett Field, California 94035
   Reference: B68-10365

Patent status:

Inquiries about obtaining rights for the commercial use of this invention may be made to NASA, Code GP, Washington, D.C. 20546.

Source: Jack M. Pope and John Dimeff
(ARC-10174)

NASA TECH BRIEF

NASA Tech Briefs are issued to summarize specific innovations derived from the U.S. space program, to encourage their commercial application. Copies are available to the public at 15 cents each from the Clearinghouse for Federal Scientific and Technical Information, Springfield, Virginia 22151.

Detection of Effect of Deposits on Optical Windows on Pyrometer Measurements

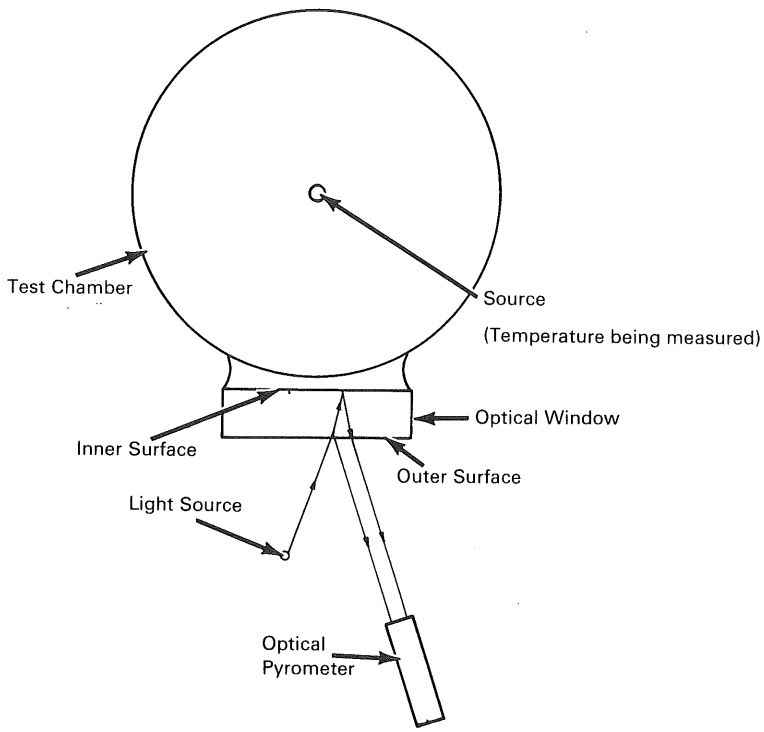

The problem:

Temperatures in an enclosed test chamber are measured through an optical window by an optical pyrometer. The transmittance characteristics of a clean window are determined by calibration. After a length of time, the inside surface of the window becomes coated with deposits as a result of the test. These coatings reduce the transmittance of the window even before the coatings are visible to the eye. Therefore, application of the original transmittance value to measurements made under these conditions results in errors.

The solution:

The presence of deposits on the inner surface of the window can be detected by periodically measuring the reflectivity of the inner surface. An increase in the amount of light reflected from the inner surface as compared with a clean window indicates a deposit has formed.

(continued overleaf)

This document was prepared under the sponsorship of the National Aeronautics and Space Administration. Neither the United States Government nor any person acting on behalf of the United States Government assumes any liability resulting from the use of the information contained in this document, or warrants that such use will be free from privately owned rights.

How it's done:

The reflectivity is measured by using an external light source and a pyrometer as indicated in the figure. The light source need not be calibrated because the outside of the window can easily be cleaned each time a measurement is made. The percentage of light reflected from the outside surface of the window therefore remains constant and can be used as a base for comparison when measuring reflections from the inside surface.

The procedure may be used to indicate when the inside of the window should be cleaned. Alternatively, corrections may be made for the temperature readings by correlating the reflectivity of the deposits with their effect on the temperature measurement. This eliminates the need for interrupting tests to clean the inside surface of the window.

Note:

Inquiries concerning this innovation may be directed to:

Technology Utilization Officer
Lewis Research Center
21000 Brookpark Road
Cleveland, Ohio 44135
Reference: B68-10367

Patent status:

No patent action is contemplated by NASA.

Source: Peter Cipollone
(LEW-10366)

NASA TECH BRIEF

NASA Tech Briefs are issued to summarize specific innovations derived from the U.S. space program, to encourage their commercial application. Copies are available to the public at 15 cents each from the Clearinghouse for Federal Scientific and Technical Information, Springfield, Virginia 22151.

Cooled Miniature Pressure Transducers Effective at High Temperatures

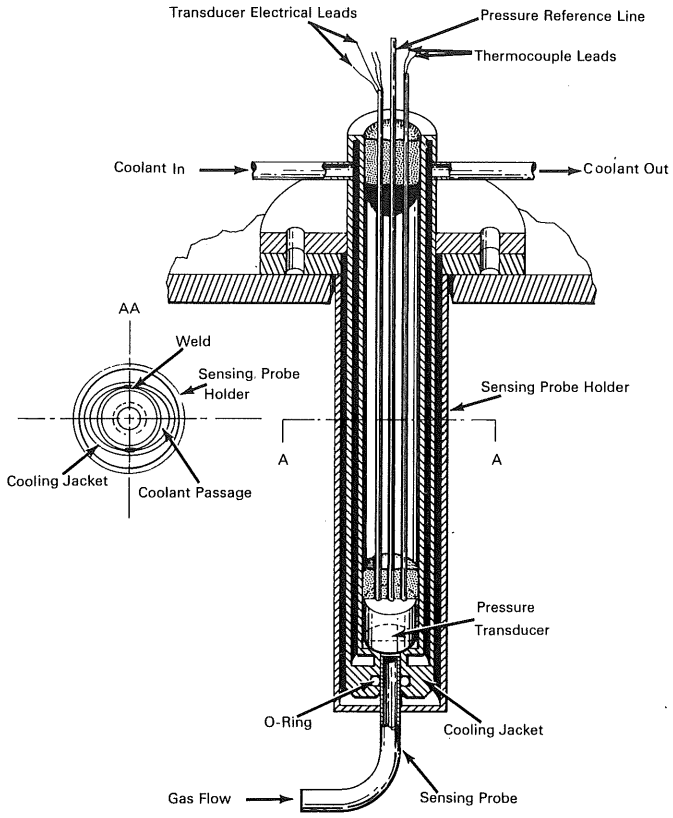

A compact water-cooled mount for miniature pressure transducers, which has been developed, permits locating the transducers in hotter and more confined environments than was previously possible. Compactness was attained by utilizing pressure transducers ¼ inch in diameter by ¼ inch in length, with connecting leads and reference pressure tube extending from the rear. Good response at frequencies to several hundred Hertz is obtained by locating the pressure transducer near the mouth of the sensing probe.

The cooling jacket comprises two concentric tubes. The inner tube is circular, with an inside diameter slightly larger than the outside diameter of the transducer. The outer tube is flattened to an elliptical cross section having a minor axis equal to the outside diameter of the inner tube. The two tubes are roll

(continued overleaf)

This document was prepared under the sponsorship of the National Aeronautics and Space Administration. Neither the United States Government nor any person acting on behalf of the United States Government assumes any liability resulting from the use of the information contained in this document, or warrants that such use will be free from privately owned rights.

welded or spot welded together at their line of contact to provide parallel coolant supply and return passages. The coolant passages are connected at the inner or sensing end where the inside tube is reduced in diameter to fit around the transducer. The cooling jacket extends past the end of the transducer, so that the gas adjacent to the pressure diaphragm is also cooled. The transducer rests on a 0.010-inch-wide rim at the end of the inner tube. A thermocouple is attached to the transducer case. Transducer operating temperature is used to determine the coolant flow rate required and to correct the pressure measurements.

To assemble the device, the transducer is positioned in the inner tube which is then filled with an epoxy-type cement. This both seals the tube and prevents vibration of the leads, reference tube, and thermocouple. An alternate method uses O-ring seals and a capped tube. The completed transducer mount is slipped into the sensing probe holder, and the sensing probe is inserted into the inner end of the pressure transducer mount. Gas sealing is achieved with an O-ring.

Initial testing at various ambient temperatures and flow rates showed excellent performance. As a result, approximately 50 units of lengths ranging from 1.2 to 9.4 inches were built, and are being used in the testing of advanced aircraft engines. Gas temperatures at the probe locations range upward of 1000° F.

Notes:

1. This instrumentation made it possible, for the first time, to measure quantitatively high-frequency total pressure fluctuations resulting from rotating stall in an axial flow engine compressor. Measurements have determined the initial location of stall and followed the progression of a stall through the remaining stages of the compressor.
2. Details may be obtained from:

   Technology Utilization Officer
   Lewis Research Center
   21000 Brookpark Road
   Cleveland, Ohio 44135
   Reference: B68-10370

Patent status:

No patent action is contemplated by NASA.

Source: E. C. Armentrout
(LEW-10401)

NASA TECH BRIEF

NASA Tech Briefs are issued to summarize specific innovations derived from the U.S. space program, to encourage their commercial application. Copies are available to the public at 15 cents each from the Clearinghouse for Federal Scientific and Technical Information, Springfield, Virginia 22151.

Automatic System Nondestructively Monitors and Records Fatigue Crack Growth

An ultrasonic system has been devised to automatically detect and record the propagation of a fatigue crack in a test specimen undergoing fatigue cycling. The system employs ultrasonic reflection techniques to monitor the location of the tip of a propagating fatigue crack. A piezoelectric transducer, which is water-coupled to a test specimen, generates an ultrasonic beam which is partially reflected from the crack tip, and partially reflected from a reference reflector plate which is mounted beyond the area containing the fatigue crack. The transducer's position is adjusted until the amplitudes of the signals reflected from the crack tip and from the reflector plate are equal. Growth of the fatigue crack causes an imbalance in the amplitude of these reflected signals producing an error voltage. This error voltage activates a servo-motor which moves the transducer across the specimen surface until the reflected signals are again balanced. The distance the transducer moves to balance the reflected signals is equal to the advance of the fatigue crack.

The advantage of employing a reflector plate to obtain a reference signal is that the latter is conditioned through the same environment as the signal passing to and reflected from the crack. Therefore, the effects of variables such as surface conditions, stress loading, and transducer coupling are minimized. The system does not depend on a particular signal amplitude. The required error voltage to monitor fatigue-crack propagation depends only on the difference between the amplitudes of the signals from the crack and the reference plate.

The system includes an ultrasonic transmitter-receiver (commonly used in flaw detection) to excite the transducer and display the received signals. Video and sync pulse outputs are processed through external circuits. The video output includes the voltage transmitted to the transducer and the reflected signal voltages. This video output feeds two gated switches which select the reflected signals in a prescribed time interval, thus rejecting extraneous signals including noise. The gating action is initiated from the sync pulse of the ultrasonic unit. The two reflected signals are amplified and integrated to provide an error signal to a servo amplifier and motor drive unit.

In a typical setup, a 0.125-inch-thick aluminum alloy, with a 0.156-inch-diameter-hole in the center to simulate a crack-starting notch, was used as a test specimen. A 0.125- × 0.625-inch reflector plate of the same alloy was clamped to the specimen on one side of the hole. The reflector plate extended across the width of the specimen and was ultrasonically coupled to it by a film of oil. The ultrasonic transducer unit was positioned to face the reflector plate on the opposite side of the hole and to travel parallel to the reflector plate. The transducer unit was comprised of a 0.5-inch-diameter piezoelectric crystal (5.0 MHz); a water-filled, hollow acrylic plastic block; and a servo-drive motor. An O-ring gasket was used to seal the ends of the water column which coupled the transducer ultrasonically to the specimen. The transducer was pivot-mounted so that the injection angle of the ultrasonic beam could be varied. A lead screw, which was coupled to the servo-motor through a flexible shaft, guided the transducer across the specimen.

Tests were conducted with the setup described above on a specimen in which a slot was being machined to simulate the propagation of a fatigue crack. Increments as small as 0.001 inch were detected and automatically tracked. The repeatability of the system

(continued overleaf)

This document was prepared under the sponsorship of the National Aeronautics and Space Administration. Neither the United States Government nor any person acting on behalf of the United States Government assumes any liability resulting from the use of the information contained in this document, or warrants that such use will be free from privately owned rights.

was ±0.005 inch for a number of specimens tested. A slot was cut starting 0.125 inch from the hole and extending to a length of 1.000 inch, with a maximum error range of ±0.012 inch.

Note:

Complete details of this development may be obtained from:

Technology Utilization Officer
Langley Research Center
Langley Station
Hampton, Virginia 23365
Reference: B68-10379

Patent status:

Inquiries about obtaining rights for the commercial use of this invention amy be made to NASA, Code GP, Washington, D.C. 20546.

Source: F. Hoppe and N. S. Inman
of Fairchild Hiller Corporation
under contract to
Langley Research Center
(LAR-10091)

NASA TECH BRIEF

NASA Tech Briefs are issued to summarize specific innovations derived from the U.S. space program, to encourage their commercial application. Copies are available to the public at 15 cents each from the Clearinghouse for Federal Scientific and Technical Information, Springfield, Virginia 22151.

System Measures Response Time of Photomultiplier Tubes

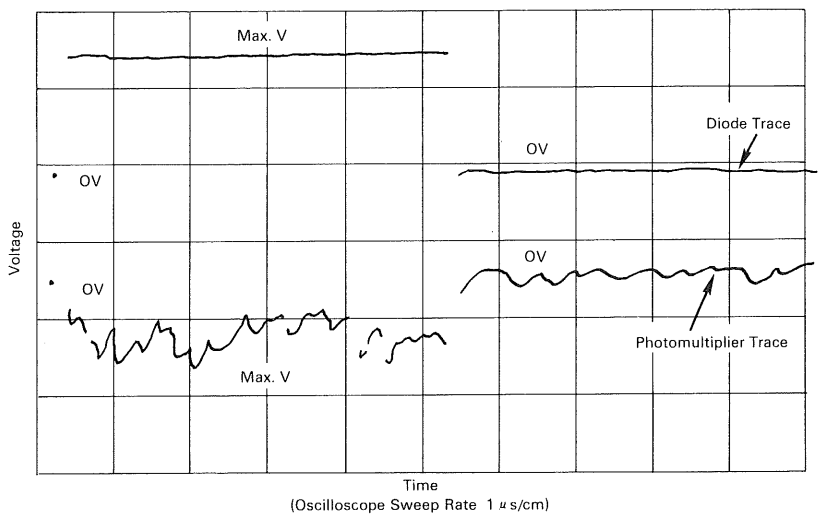

OSCILLOSCOPE TRACES OF GALLIUM PHOSPHIDE DIODE (LAMP) AND PHOTOMULTIPLIER TUBE

A calibration system has been devised to enable precise determination of the rise time of photosensitive detectors, such as multipliers. (Rise time is defined as the time required for the voltage output pulse to rise from 10% to 90% of its final value when a photosensitive detector is instantaneously exposed to a constant-level light source.) The system is capable of measuring rise times in the range of 10^{-7} to 10^{-5} second. To perform a calibration, the time–voltage curve of the excitation voltage for a light source is compared with the time–voltage curve of the voltage output from a photomultiplier tube or other photosensitive detector which is responding to the light.

In one previous method of measuring rise times, a chopping device (a rapidly rotating mirror or a fast shutter in the light path between a constant-level light source and the photosensitive detector) was used to pulse the light from the light source. The light pulses produced by the chopping device are not of an ideal shape and are usually not satisfactory for rise times much faster than 10^{-5} second. In another method, an oscilloscope beam is pulsed as the light source. With the normally available oscilloscope tubes, the method is satisfactory to about 5×10^{-6} second.

The light source of the new system, a gallium phosphide diode, is driven by an electrical square wave pulse generator. Within 10^{-8} second after current is applied to the diode (lamp), it emits yellow-green light at 5600 angstroms. The pulse generator voltage input to the lamp is simultaneously recorded

(continued overleaf)

This document was prepared under the sponsorship of the National Aeronautics and Space Administration. Neither the United States Government nor any person acting on behalf of the United States Government assumes any liability resulting from the use of the information contained in this document, or warrants that such use will be free from privately owned rights.

on an oscilloscope. The photomultiplier tube to be calibrated is positioned to intercept the light pulse from the diode light source; the light pulse duration is adjusted so that the output voltage from the photomultiplier tube has time to reach a fixed maximum value. The output voltage curve of the photomultiplier is also simultaneously recorded on the oscilloscope. A comparison of the two oscilloscope traces (see sketch) gives a measure of the photomultiplier rise time. The total time response of the system is the sum of the following:

(1) time delay between generator pulse emission to output from the light source (less than 10^{-8} second);

(2) time delay between light pulse and photomultiplier's initial sensing (less than 10^{-8} second); and

(3) time delay or rise time of photomultiplier (10^{-7} to 10^{-5} second).

Notes:

1. In performing a calibration, it should be observed on the oscilloscope trace at the end of the generator voltage pulse that the light seems to extinguish as fast as it appeared.
2. In experiments with this system, it was found that when the generator pulse is of constant maximum voltage, the light pulse reaches a constant intensity within a very short time.
3. Details may be obtained from:

   Technology Utilization Officer
   Lewis Research Center
   21000 Brookpark Road
   Cleveland, Ohio 44135
   Reference: B68-10382

Patent status:

No patent action is contemplated by NASA.

Source: M. R. Lauver
(LEW-10437)

NASA TECH BRIEF

NASA Tech Briefs are issued to summarize specific innovations derived from the U.S. space program, to encourage their commercial application. Copies are available to the public at 15 cents each from the Clearinghouse for Federal Scientific and Technical Information, Springfield, Virginia 22151.

Improved Limiter for Turn-On Current Transient

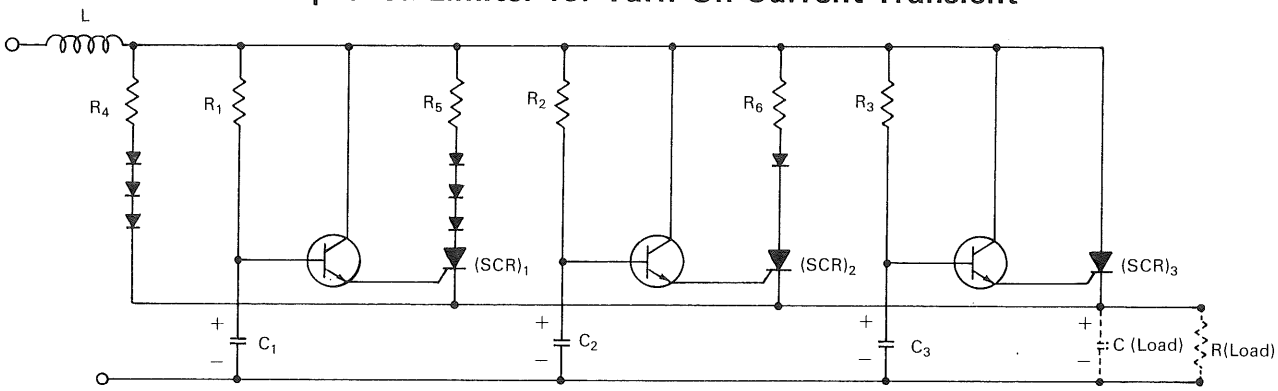

This circuit limits the turn-on current transient to a specified amplitude and provides a low-impedance path between supply voltage and load after a prescribed time interval. The circuit offers a wide range of flexibility in adjusting peak current and time to complete connection to the load. It is more compact and lighter than a comparable limiter circuit which uses a large choke but which is still not effective where large load capacities are involved.

The new circuit automatically controls the initial peak current that can flow into a high-capacity load when voltage is applied. The load capacity is charged in four controllable steps. Peak current limiting is controlled by the values of resistors R_4, R_5, and R_6. The time for completion of the cycle is automatically controlled by the selection of time constants R_1C_1, R_2C_2, and R_3C_3. The small choke (L) offers a high impedance to small stray-capacity charging currents and short-duration voltage changes. When power is removed, the sequence of steps is automatically ready for the next power turn-on.

In one modification of the basic circuit, a relay that is switched on by $(SCR)_3$ is used to eliminate the unnecessary holding or gate current to $(SCR)_3$. In another modification a transistor increases the voltage across the relay coil and offers higher gain in the last stage than is obtainable with the first modification.

Note:

Complete technical details may be obtained from:

Technology Utilization Officer
Goddard Space Flight Center
Greenbelt, Maryland 20771
Reference: B68-10384

Patent status:

Inquiries about obtaining rights for the commercial use of this invention may be made to NASA, Code GP, Washington, D.C. 20546.

Source: F. C. Hallberg
(GSC-10413)

Category 01

This document was prepared under the sponsorship of the National Aeronautics and Space Administration. Neither the United States Government nor any person acting on behalf of the United States Government assumes any liability resulting from the use of the information contained in this document, or warrants that such use will be free from privately owned rights.

NASA TECH BRIEF

NASA Tech Briefs are issued to summarize specific innovations derived from the U.S. space program, to encourage their commercial application. Copies are available to the public at 15 cents each from the Clearinghouse for Federal Scientific and Technical Information, Springfield, Virginia 22151.

Low-Cost, Fast-Response Drive Circuit for Electromagnetic Torque Motors

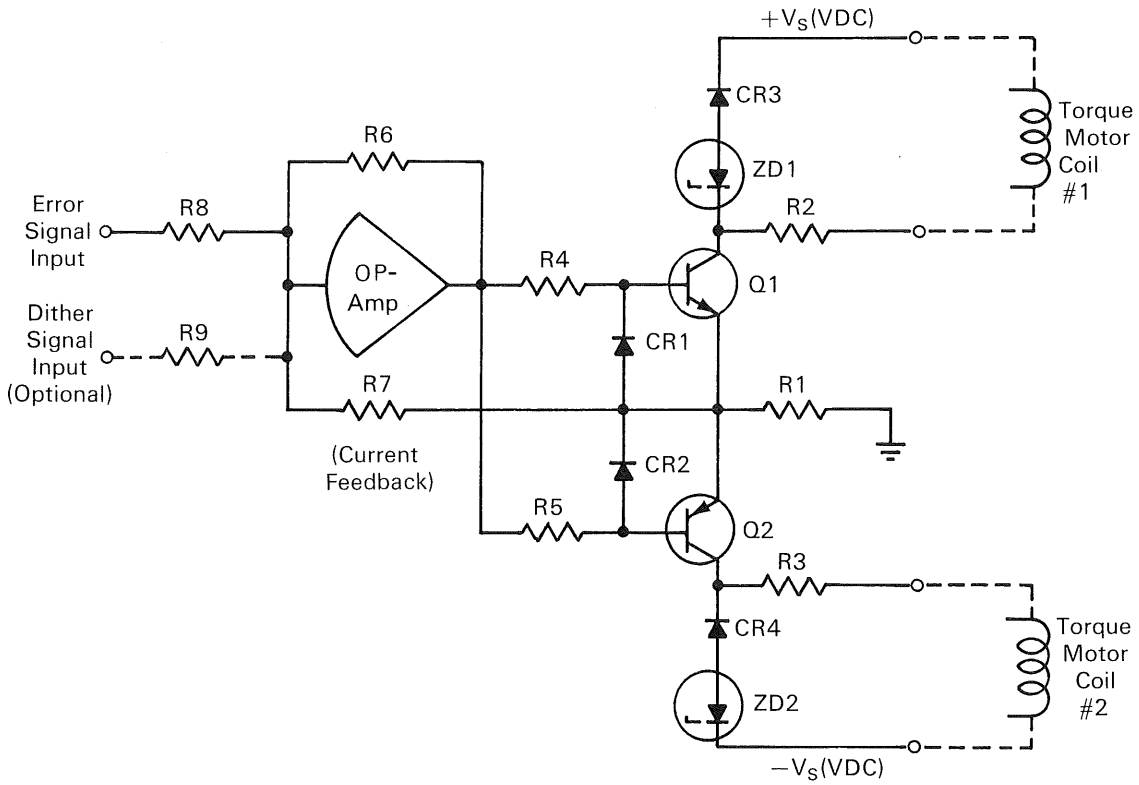

Fast response (150–200 Hz) electrohydraulic servo systems are used as research tools in experimental dynamics and controls studies. These systems normally include a fast-response electrohydraulic servovalve device which has an electromagnetic torque motor as the initial stage. This input device consists of two mutually-coupled coils driven by the output of an electronic servoamplifier device. The response of the torque motor coils when driven by zero source impedance is, however, quite low (40–50 Hz); consideration must therefore be given to insuring that the driving amplifier output appears as a very high impedance to eliminate the dynamics of the torque motor device.

Conventional high output impedance coil driving circuits are undesirably complex. The coil drive circuit described herein accomplishes significant reduction of the inductive coil time constant with a minimum of circuit sophistication. This circuit has been developed

(continued overleaf)

This document was prepared under the sponsorship of the National Aeronautics and Space Administration. Neither the United States Government nor any person acting on behalf of the United States Government assumes any liability resulting from the use of the information contained in this document, or warrants that such use will be free from privately owned rights.

into a low-cost modular servoamplifier output stage. It is to be used with a compatible preamplifier stage, which will provide the other servo-loop functions of summing, adjustable gain, and compensation. The response improvement of the torque motor coils with this particular arrangement of output circuit elements (see diagram) is greater than 25:1 for small signals, and 5:1 at full output current amplitude.

The above improvement is accomplished in the following manner. The output configuration alternately energizes the torque motor coils in a push–pull configuration. These coils, which are mutually coupled have the response degrading effects of this coupling eliminated by the push–pull arrangement and by the zener diodes (ZD1 and ZD2) connected across the coils in series with the conventional "free-wheeling" rectifiers (CR3 and CR4). Response is further improved (a) by the fact that the output transistors function as current amplifiers, and (b) by the use of negative differential current feedback (R1 and R7). This latter feature also provides (a) minimization of the output dead-zone nonlinearity, caused by the output transistor (Q1 and Q2) base-to-emitter junction voltage drops, and (b) stabilization of the output gain for variations of the current gain of the output transistors. The magnitude of this improvement eliminates torque motor response influence on the overall control system dynamic performance.

Notes:

1. It should be noted that no new components or concepts have been generated (in fact, similar circuits have been used in computer designs), but this innovation combines components and concepts into a novel servovalve drive circuit application. Advantages are simplicity and reduced cost compared to other approaches to obtain the same results.
2. Inquiries concerning this innovation may be directed to:

   Technology Utilization Officer
   Lewis Research Center
   21000 Brookpark Road
   Cleveland, Ohio 44135
   Reference: B68-10386

Patent status:

No patent action is contemplated by NASA.

Source John R. Zeller
(LEW-10143)

NASA TECH BRIEF

NASA Tech Briefs are issued to summarize specific innovations derived from the U.S. space program, to encourage their commercial application. Copies are available to the public at 15 cents each from the Clearinghouse for Federal Scientific and Technical Information, Springfield, Virginia 22151.

Method for Reducing Snap in Magnetic Amplifiers

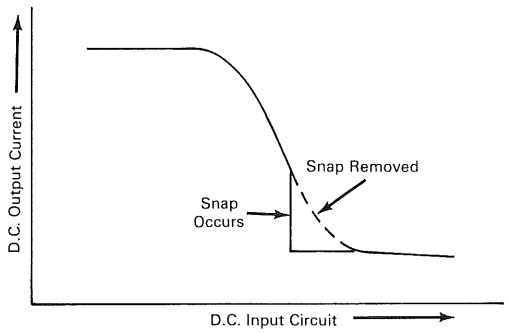

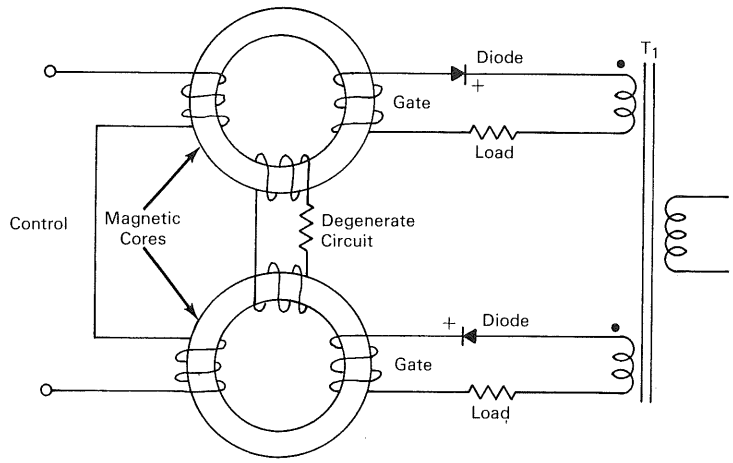

Snap is a phenomenon which frequently occurs in magnetic amplifiers and shows up as an abrupt change or discontinuity in the amplifier characteristics, as shown in the left figure. This discontinuity limits the range and hence the usefulness of the magnetic amplifier.

A method of reducing snap in magnetic amplifiers was developed which uses a degenerative feedback circuit consisting of a resistor and a separate winding on the magnetic cores. Briefly, the flux set up by the induced current in the degenerative feedback circuit is in such a direction as to oppose the change in flux which occurs during snap. The right figure illustrates the degenerative feedback circuit. This feedback circuit allows the magnetic amplifier to be used at lower values of output current, thus extending its range.

Note:

Inquiries concerning this invention may be directed to:

Technology Utilization Officer
Lewis Research Center
21000 Brookpark Road
Cleveland, Ohio 44135
Reference: B68-10388

Patent status:

Inquiries about obtaining rights for the commercial use of this invention may be made to NASA, Code GP, Washington, D.C. 20546.

Source: John L. Word
and Raymond L. E. Fischer
(LEW-10388)

Category 01

This document was prepared under the sponsorship of the National Aeronautics and Space Administration. Neither the United States Government nor any person acting on behalf of the United States Government assumes any liability resulting from the use of the information contained in this document, or warrants that such use will be free from privately owned rights.

AEC-NASA TECH BRIEF

AEC-NASA Tech Briefs describe innovations resulting from the research and development program of the U.S. AEC or from AEC-NASA interagency efforts. They are issued to encourage commercial application. Tech Briefs are published by NASA and may be purchased, at 15 cents each, from the Clearinghouse for Federal Scientific and Technical Information, Springfield, Virginia 22151.

Method for Making Small Pointed Thermocouples

The problem:

To devise a method for making single-ended 1 mil or smaller thermocouples that have the fast response time necessary to measure rapid temperature changes accurately and that will not significantly alter the environment being measured.

The solution:

A constantan wire is worked to a needle point and covered with a copper coating to produce a small, concentric, fast-reaction thermocouple that alters the environment only slightly because of the small mass involved.

How it's done:

A straight piece of 0.032 inch diameter constantan wire, 1½ inches long, is mounted in a pin vise so that approximately 1 inch of wire extends from the vise. A tip is formed by rotating the wire against an aluminum block and shaping it with a fine file down to 0.005 inch or less. The filing motion must be parallel with the wire and in a direction away from the pin vise. After as much work as possible is done with the file, the tip is worked with successively smaller emery cloths, and finished with crocus cloth. All shredding caused by the file must be removed. After the tip is formed, the space ¼ to ½ inch from the butt end is knurled by rolling a file over the constantan while it is lying on a piece of hardwood; this will help hold the sleeve in place. The wire is then lightly oxidized to free the surface of grease and oil.

A refractory cement is used to attach a sleeve of ⅛ inch copper pipe, ¼ inch long, to the butt end of the wire. After the cement has been cured by heat, a thin, uniform coating of a clear glaze ceramic paint is applied to about ⅜ inch of the tip and fused by heating to 1700° F. in an oven. An insulating cement is applied from the base of the sleeve to within ¼ inch of the tip, the refractory cement being covered. The copper sleeve is then cleaned of all oxide caused by the heating, and the assembly is mounted vertically and rotated in a vacuum chamber for copper coating. After 2×10^{-6} to 20×10^{-6} inch of copper is deposited on the assembly, it is removed from the vacuum chamber, and about 1/32 of an inch of the tip is cut off with jewelers' end cutters. The thermocouple is then given another vacuum coating of copper which completes the contact to the constantan tip.

After a continuity check with a low voltage ohmmeter, the thermocouple is given a final electroplating with copper. The base is covered with wax, and the assembly is placed in a copper electroplating bath with 1/16 inch of the tip not immersed. The tip is gradually moved further above the level of the plating solution so that the copper plating is heavy on the base to ensure a good contact and thin near the tip to keep the mass small near the thermocouple junction.

Notes:

1. The average decay response time on a small tip is about ¼ second in slow moving air, although several thermocouples had much better response times.
2. A needle point thermocouple can be used to measure the internal temperature of animal tissue. Its rapid response time makes it useful for control purposes.

(continued overleaf)

This document was prepared under the sponsorship of the Atomic Energy Commission and/or the National Aeronautics and Space Administration. Neither the United States Government nor any person acting on behalf of the United States Government assumes any liability resulting from the use of the information contained in this document, or warrants that the use of any information, apparatus, method, or process disclosed in this document may not infringe privately owned rights.

3. Inquiries concerning this innovation may be directed to:

Sandia Office of Industrial Cooperation, Org. 3416
Sandia Laboratories
Post Office Box 5800
Albuquerque, New Mexico 87115
Reference: B68-10389

Patent status:

No patent action is contemplated by AEC or NASA.

Source: C. M. Stover
(SAN-10014)

NASA TECH BRIEF

NASA Tech Briefs are issued to summarize specific innovations derived from the U.S. space program, to encourage their commercial application. Copies are available to the public at 15 cents each from the Clearinghouse for Federal Scientific and Technical Information, Springfield, Virginia 22151.

Charts Designate Probable Future Oceanographic Research Fields

Charts have been prepared outlining those questions and problems which are most likely to be the subject of oceanographic research in the future. The information is of interest to NASA in estimating the probable requirements for instrumentation to be carried by satellites engaged in cooperative programs with other agencies concerned with identification, analysis, and solution of many of these problems.

These charts may be useful to private and governmental oceanographic research institutions and to oceanography students.

Note:

Copies of the charts may be obtained from:

Technology Utilization Officer
Marshall Space Flight Center
Huntsville, Alabama 35812
Reference: B68-10397

Patent status:

No patent action is contemplated by NASA.

Source: McDonnell Douglas Company
under contract to
Marshall Space Flight Center
(MFS-20202)

Category 01

This document was prepared under the sponsorship of the National Aeronautics and Space Administration. Neither the United States Government nor any person acting on behalf of the United States Government assumes any liability resulting from the use of the information contained in this document, or warrants that such use will be free from privately owned rights.

NASA TECH BRIEF

NASA Tech Briefs are issued to summarize specific innovations derived from the U.S. space program, to encourage their commercial application. Copies are available to the public at 15 cents each from the Clearinghouse for Federal Scientific and Technical Information, Springfield, Virginia 22151.

Automatic Solar Lamp Intensity Control System

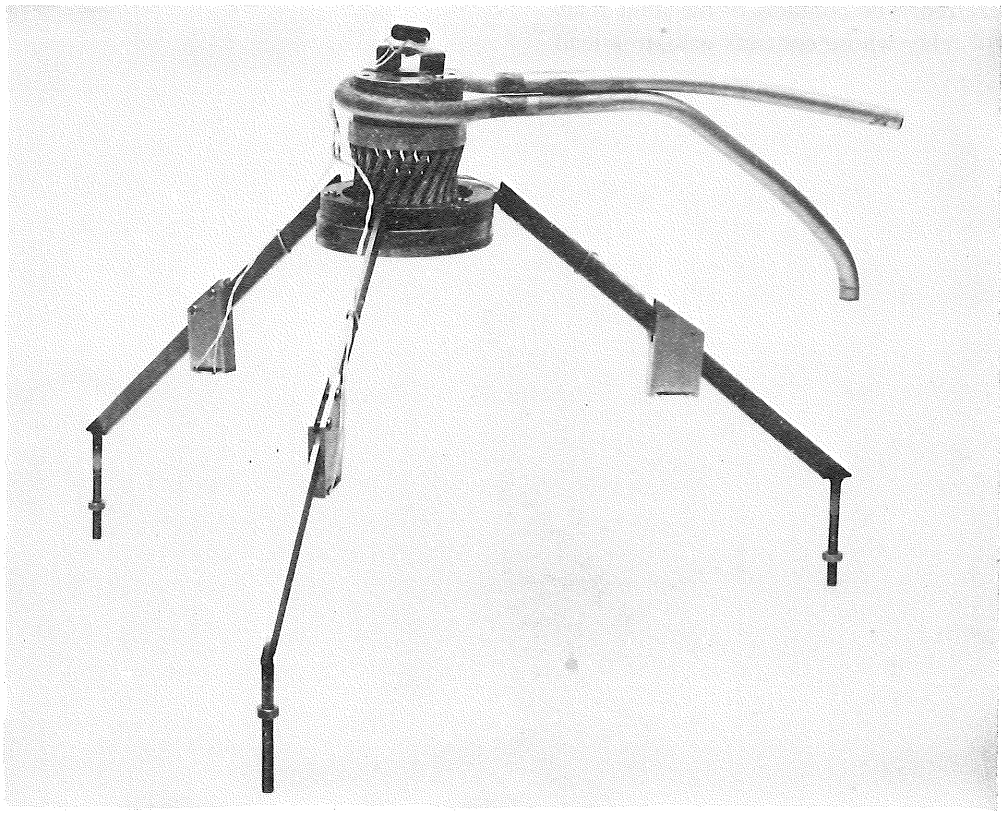

The problem:

In operating a solar simulation system within a thermal vacuum chamber, it is desirable to closely control the light sources in order to provide uniform and precise irradiation of the test volume. Previous systems used cadmium sulfide cells (one per lamp) as sensors, viewing only reflected light and, therefore, nonresponsive to changes occurring in the optical train. Also used was an a.c. bridge-null for each lamp control circuit with a common a.c. reference highly susceptible to interaction.

The solution:

A system that substitutes solar cells directly in the path of the radiation incident on the test volume and uses a d.c. bridge-null system.

How it's done:

A solar cell is affixed to a heat sink mounted on each of three arms for each solar lamp. The three cells

(continued overleaf)

This document was prepared under the sponsorship of the National Aeronautics and Space Administration. Neither the United States Government nor any person acting on behalf of the United States Government assumes any liability resulting from the use of the information contained in this document, or warrants that such use will be free from privately owned rights.

are connected in parallel across a precision, low temperature coefficient, one ohm resistor mounted under the hyperbola. Each solar cell is so positioned that the typically hot and cooler areas of lamp intensity are monitored.

Output of the combined detectors for each lamp is fed through a potentiometer to the input of a control amplifier, the potentiometer being used to normalize the outputs of all detectors. An adjustable bias opposing solar cell input is also applied to the control amplifier. At the desired solar lamp radiation, this bias causes the net solar cell current to "null" the needle of a contact meter. Adjustable limits about the "null" position in the contact meter are positioned to form the desired control bandwidth. When the needle passes either high or low limit from "null", the limit contacts are energized. The contacts of the limit relay energize a control relay whose contacts actuate a lead screw drive motor to move a transformer core in the solar lamp power supply to change input power to the lamp to restore the preset radiation level. Control of the radiation from the 127 solar lamps is automatic.

Note:

Inquiries concerning this innovation may be directed to:

Technology Utilization Officer
Goddard Space Flight Center
Greenbelt, Maryland 20771
Reference: B68-10399

Patent status:

No patent action is contemplated by NASA.

Source: Nathan Mandell
and Harry Leverone
(XGS-10017)

AEC-NASA TECH BRIEF

AEC-NASA Tech Briefs describe innovations resulting from the research and development program of the U.S. AEC or from AEC-NASA interagency efforts. They are issued to encourage commercial application. Tech Briefs are published by NASA and may be purchased, at 15 cents each, from the Clearinghouse for Federal Scientific and Technical Information, Springfield, Virginia 22151.

Lithium–Tellurium Bimetallic Cell Has Increased Voltage

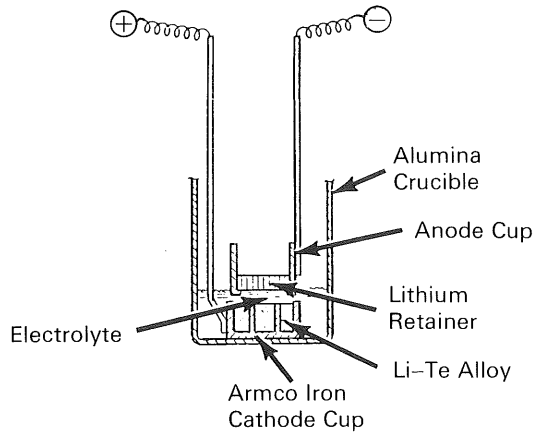

The problem:

To improve the power and current density of bimetallic cells with fused-salt electrolytes. Extensive research effort has been devoted to the development of high power and high energy density secondary cells, such as the lithium–chlorine, the sodium–sulfur, and the sodium–bismuth cells. Although the latter, a bimetallic cell with a fused-salt electrolyte, has demonstrated a high current density, both the power and current densities need to be improved before the bimetallic cell can be considered fully competitive.

The solution:

A lithium–tellurium secondary cell with a fused lithium halide electrolyte, tested in the temperature range 467° to 500°C, shows improvement over the sodium–bismuth cell. The voltage of this bimetallic cell was increased by using the more electropositive anode material, lithium, and the more electronegative cathode material, tellurium. Also, the equivalent weights of lithium and tellurium are much lower than those of sodium and bismuth, yielding a cell of higher energy density.

Current densities in excess of 12 amps/cm^2 were obtained on discharge, with maximum power densities of 5 W/cm^2 available at 5 to 7 amps/cm^2. Similarly high charging rates (less than 15 minutes for full recharge) were found, indicating that the lithium–tellurium cell may have applications in many areas, including those requiring very rapid recharge rates.

How it's done:

The experimental lithium–tellurium cell was constructed as shown in the figure. The cathode cup was 3.7 cm ID by 2.2 cm high, corresponding to an active cathode area of 10 cm^2. An annular fin in the cathode cup aided in current collection. Armco iron was used for the cathode cup and type 316 stainless steel was used for the anode metal retainer-current collectors.

The amounts of lithium and tellurium in the cell were varied; the maximum ratio of lithium to tellurium corresponded to 30 at/o Li in Te in the cathode alloy at complete discharge. The maximum capacity of the cell was 9.55 amp-hr, and the melting point of tellurium, 449.80°C, determined the

(continued overleaf)

This document was prepared under the sponsorship of the Atomic Energy Commission and/or the National Aeronautics and Space Administration. Neither the United States Government nor any person acting on behalf of the United States Government assumes any liability resulting from the use of the information contained in this document, or warrants that the use of any information, apparatus, method, or process disclosed in this document may not infringe privately owned rights.

minimum cell operating temperature. All experiments were performed in a high-purity helium atmosphere.

After test periods of up to 300 hours at temperatures of 450° to 500°C, no degradation of the electrolyte was observed. Armco iron proved suitable for short-term use with tellurium and lithium, and 0-series stainless steels were resistant to lithium attack. For longer periods of time, some refractory metals and their alloys are stable toward liquid tellurium.

Note:

Inquiries concerning this innovation may be directed to:

Office of Industrial Cooperation
Argonne National Laboratory
9700 South Cass Avenue
Argonne, Illinois 60439
Reference: B68-10400

Source: H. Shimotake, G. L. Rogers, and E. J. Cairns of the Chemical Engineering Division (ARG-10141)

Patent status:

Inquiries about obtaining rights for commercial use of this innovation may be made to:

Mr. George H. Lee, Chief
Chicago Patent Group
U.S. Atomic Energy Commission
Chicago Operations Office
9800 South Cass Avenue
Argonne, Illinois 60439

NASA TECH BRIEF

NASA Tech Briefs are issued to summarize specific innovations derived from the U.S. space program, to encourage their commercial application. Copies are available to the public at 15 cents each from the Clearinghouse for Federal Scientific and Technical Information, Springfield, Virginia 22151.

System for Measuring Spatial Distribution of Ejected Droplets, a Concept

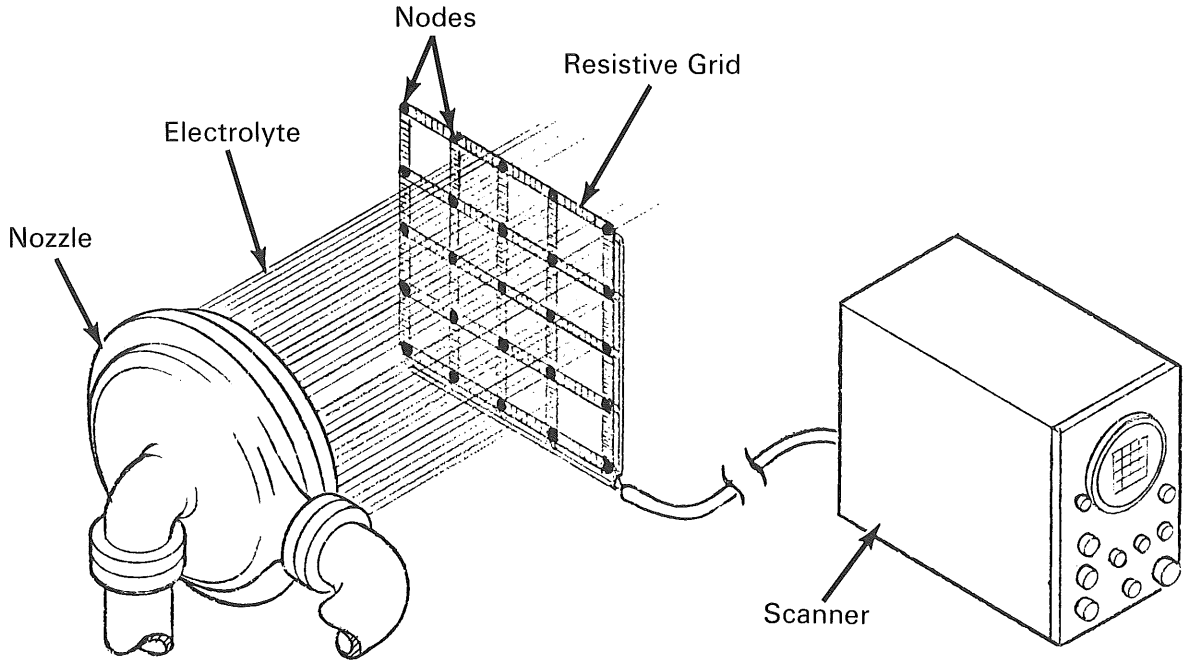

A concept is presented for the design of a system to ascertain the spatial distribution of high-velocity droplets ejected from a nozzle or spray gun.

An electrically resistive grid would be employed as the sensing screen of the system. The grid, illustrated in the schematic, consists of a screen of high-resistance, low cross-sectional elements. These thin elements are symmetrically arranged in the form of a rectangular grid and electrically insulated from one another as well as from the supporting structure. Electrical leads are connected to the ends (nodes) of each element. The leads are connected (preferably through a commutator for tape recording or computer processing) to a signal scanner such as a cathode ray tube.

To perform a measurement, the grid is positioned downstream parallel to the discharge plane of the nozzle to be scanned. An electrolyte having viscosity and density characteristics similar to those of the operational fluid is used as a spray simulant. A valve, upstream of the nozzle, is then opened for a brief period to eject the spray towards the grid. The output signals would correspond to the voltage drop variations between nodes of the grid due to changes in

(continued overleaf)

This document was prepared under the sponsorship of the National Aeronautics and Space Administration. Neither the United States Government nor any person acting on behalf of the United States Government assumes any liability resulting from the use of the information contained in this document, or warrants that such use will be free from privately owned rights.

resistivity of the grid segments. Spatial distribution of the electrolyte spray droplets would be determined from the output signal pattern. This pattern would then represent the distribution of the droplets that would result from ejection of the operating fluid through the same injector.

Note:

This system is presented only as a concept; neither a prototype nor a model has been constructed as of the date of this Tech Brief.

Patent status:

This invention is owned by NASA, and a patent application has been filed. Royalty-free, nonexclusive licenses for its commercial use will be granted by NASA. Inquiries concerning license rights should be made to NASA, Code GP, Washington, D.C. 20546.

Source: R. A. Ayvazian
of North American Rockwell Corporation
under contract to
NASA Pasadena Office
(NPO-10185)

NASA TECH BRIEF

NASA Tech Briefs are issued to summarize specific innovations derived from the U.S. space program, to encourage their commercial application. Copies are available to the public at 15 cents each from the Clearinghouse for Federal Scientific and Technical Information, Springfield, Virginia 22151.

Design Concept for Nonarcing Electrical Connector

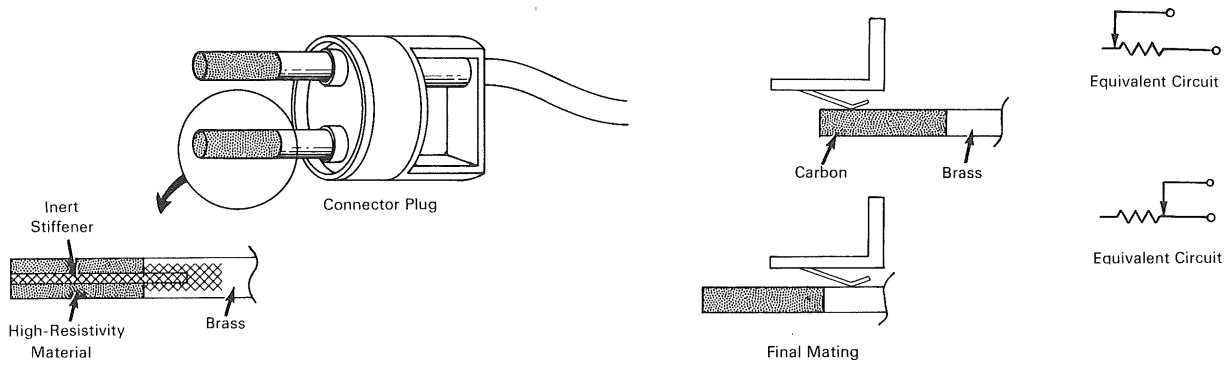

A connector plug, as illustrated in the conceptual sketches, will automatically minimize arcing during mating and demating. This plug incorporates a high-resistivity outer sheath, such as a carbon rod with an appropriate inert binder, as an extension to the regular pin contact. As the plug is inserted into a receptacle, the high-resistivity sheath limits the current to below the arcing level. On continuing the insertion, less and less of the sheath is placed in series with the line current, until with the "bottoming" of the brass base the circuit is completed and maximum current flows. On withdrawal of the plug, the process is reversed so that arcing is minimized (minimum current flows) at the instant of demating.

The carbon rod can be made very hard and would be machinable. However, since such a rod has very little shear strength, an inert stiffener would be required as shown in the sketch.

This connector would be useful in atmospheres containing explosive or combustible gases or vapors. It would also reduce erosion at the contact surfaces in cases where mating and demating are performed frequently.

Note:

This device is only in the conceptual stage; neither a model nor a prototype has been built as of the date of this Tech Brief.

Patent status:

No patent action is contemplated by NASA.

Source: R. E. Holmen
of Douglas Aircraft Company
under contract to
Marshall Space Flight Center
(MFS-14937)

Category 01

This document was prepared under the sponsorship of the National Aeronautics and Space Administration. Neither the United States Government nor any person acting on behalf of the United States Government assumes any liability resulting from the use of the information contained in this document, or warrants that such use will be free from privately owned rights.

AEC-NASA TECH BRIEF

AEC-NASA Tech Briefs describe innovations resulting from the research and development program of the U.S. AEC or from AEC-NASA interagency efforts. They are issued to encourage commercial application. Tech Briefs are published by NASA and may be purchased, at 15 cents each, from the Clearinghouse for Federal Scientific and Technical Information, Springfield, Virginia 22151.

New Bimetallic EMF Cell Shows Promise in Direct Energy Conversion

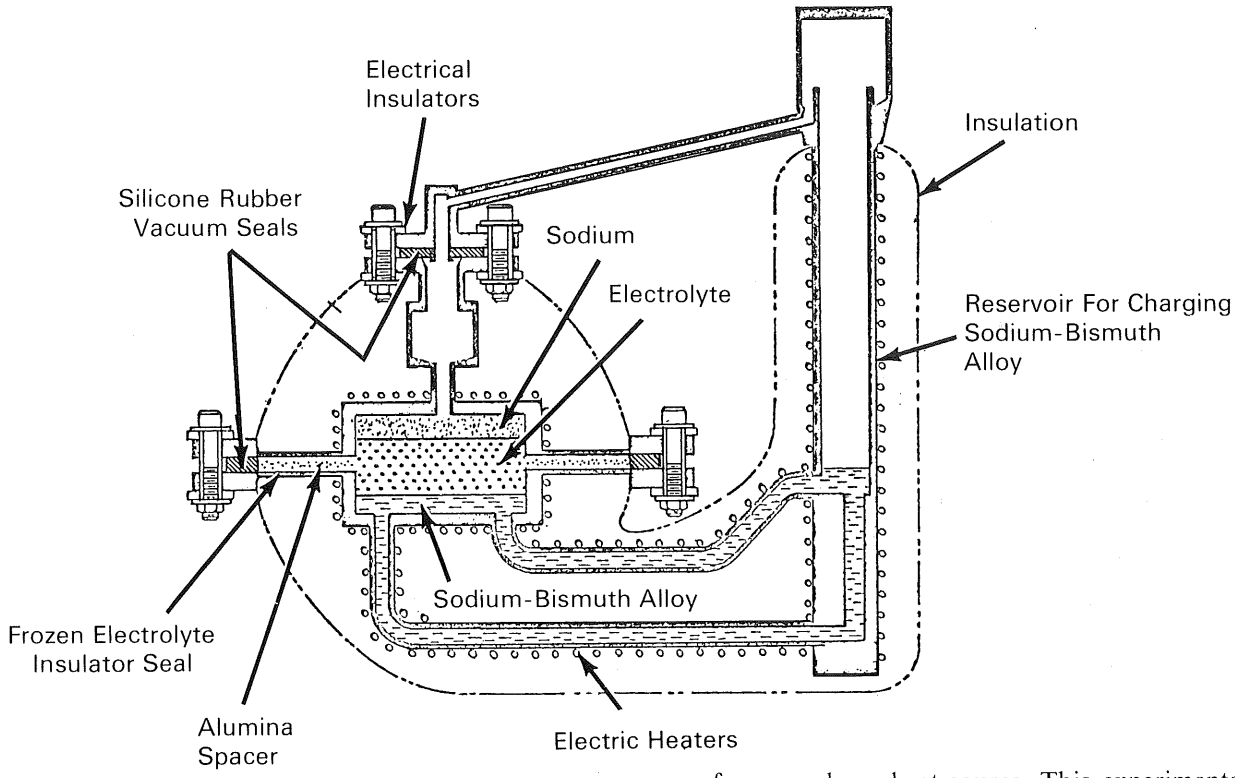

The problem:

To develop a system capable of economically and effectively converting thermal energy into electrical energy. The system would be coupled with a nuclear reactor or isotropic heat source. At the present time, nuclear power is used to produce steam, which is converted to electricity via conventional turbogenerators. A direct energy conversion process would eliminate the expensive, bulky, and inefficient steam interface.

The solution:

A concentration cell, based upon a thermally regenerative cell principle, which can produce electrical energy from any large heat source. This experimental bimetallic EMF cell (without a thermal regenerator) uses a sodium–bismuth alloy cathode and a pure liquid sodium anode. The cell has been operated for 17 months without failure, exhibiting reliability, corrosion resistance, and a high current density performance. Although there are presently material problems related to the regenerator, when these are solved, the regenerative bimetallic EMF cell system should be a promising direct energy conversion device.

How it's done:

The experimental bimetallic EMF cell for a Na–Bi system, shown in the figure, is constructed of type

(continued overleaf)

This document was prepared under the sponsorship of the Atomic Energy Commission and/or the National Aeronautics and Space Administration. Neither the United States Government nor any person acting on behalf of the United States Government assumes any liability resulting from the use of the information contained in this document, or warrants that the use of any information, apparatus, method, or process disclosed in this document may not infringe privately owned rights.

18-8 stainless steel. The electrodes are cylindrical and have a 76.2 mm i.d. Spikes 2 mm in diameter on the anode act as electron collectors.

The anode and cathode are electrically insulated by a high purity alumina disc. A portion of the molten salt penetrates into gaps between the alumina spacer and the stainless steel flange and freezes. This frozen electrolyte, together with a silicone rubber gasket, provides a vacuum and pressure seal. Nichrome heater wires, insulated with alumina powder and sheathed by stainless steel, are used for the heaters. A high temperature insulating material covers the heaters.

The cell is charged under an inert gas atmosphere since the sodium alloys are highly reactive and the salt mixtures are hygroscopic. To charge the cell, first the cathode material, 20 at/o Na–Bi alloy, is charged into the cell under argon atmosphere and melted. After freezing the alloy (the electrolyte) a eutectic mixture of NaI–NaCl–NaF, is charged. The alloy and salt mixture are then melted in an argon atmosphere. At each step, the liquid levels of metal and salt must be checked, since bismuth expands upon freezing, which raises the metal level and may short-circuit the cell.

The cell was electrically charged every 48 hours. The cell temperature was varied up to 650°C, however, a major portion of the time, the temperature was kept at approximately 550°C. The melting point of the salt is 535°C. The cell current was varied by external resistance and loaded up to 10 amperes and the charging current ranged from 1 to 2 amperes.

Cell discharge current densities of 90 and 110 ma/cm^2 at 0.5 and 0.45 V, respectively, were achieved at an anode fuel efficiency of approximately 87%. The internal resistance was about 0.05 Ω at 550°C, which decreases with increasing temperature and increases very rapidly when cooled to near the melting point.

After 17 months of operation, the cell, including the frozen electrolyte insulator seal, showed no signs of failure. An interior inspection revealed little corrosion, with only 0.05 mm dissolution of stainless steel at the electrodes. X-ray analysis of the molten salt showed no signs of dissociation.

Notes:

1. This information may be of interest to gas and power utility suppliers.
2. Users and producers of electricity may develop or employ sufficiently inexpensive heat sources and suitable use conditions to permit further development in this area.
3. The significance of this item is dependent upon the further development of regeneration system materials to withstand the boiling sodium and molten sodium–bismuth alloy environment.
4. Inquiries concerning this innovation may be directed to:

   Office of Industrial Cooperation
   Argonne National Laboratory
   9700 South Cass Avenue
   Argonne, Illinois 60439
   Reference: B68-10415

Source: H. Shimotake and J. C. Hesson
of the Chemical Engineering Division
(ARG-10183)

Patent status:

Inquiries about obtaining rights for commercial use of this innovation may be made to:

Mr. George H. Lee, Chief
Chicago Patent Group
U.S. Atomic Energy Commission
Chicago Operations Office
9800 South Cass Avenue
Argonne, Illinois 60439

AEC-NASA TECH BRIEF

AEC-NASA Tech Briefs describe innovations resulting from the research and development program of the U.S. AEC or from AEC-NASA interagency efforts. They are issued to encourage commercial application. Tech Briefs are published by NASA and may be purchased, at 15 cents each, from the Clearinghouse for Federal Scientific and Technical Information, Springfield, Virginia 22151.

High Resolution Ge(Li) Spectrometer Reduces Rate-Dependent Distortions at High Counting Rates

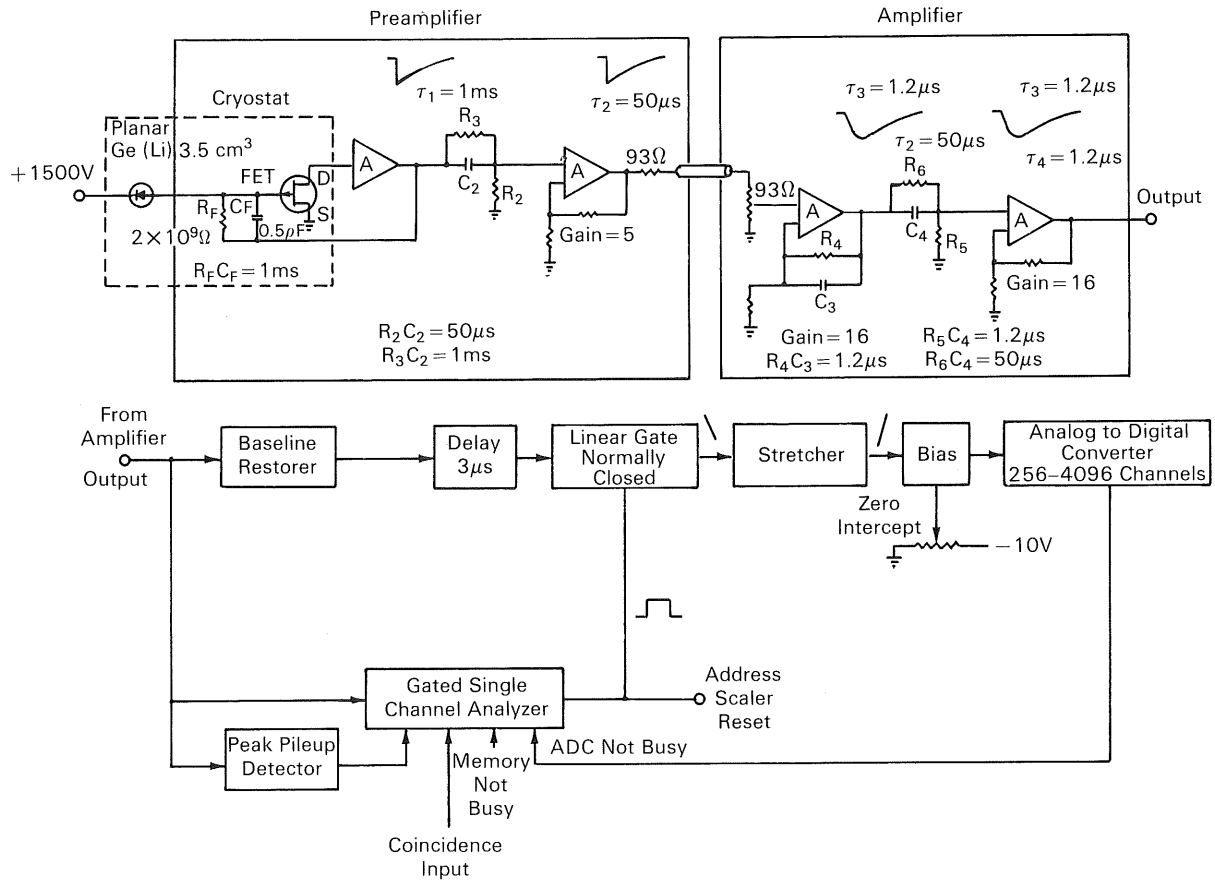

The problem:

To obtain high resolution at high counting rates in a Ge(Li) γ-ray spectrometer. Previously, spectral distortions occurred at rates above a few thousand pulses/sec due to pulse undershoot, baseline shift, and pulse pileup, thus masking the spectrometer resolving power.

The solution:

A modified spectrometer system with a low-noise preamplifier that reduces rate-dependent distortions at high counting rates. Pole-zero cancellation is used to minimize pulse undershoots due to multiple time constants; baseline restoration is used to further improve resolution and prevent spectral shifts; pulse

(continued overleaf)

This document was prepared under the sponsorship of the Atomic Energy Commission and/or the National Aeronautics and Space Administration. Neither the United States Government nor any person acting on behalf of the United States Government assumes any liability resulting from the use of the information contained in this document, or warrants that the use of any information, apparatus, method, or process disclosed in this document may not infringe privately owned rights.

shape discrimination and baseline discrimination are used to reject pileup pulses. The system resolution is nearly rate-dependent for counting rates up to 25,000 counts/sec.

How it's done:

Modifications contributing most significantly to high resolution at high counting rates are concentrated within the amplifying chain and the pulse height encoding system. A simplified schematic of the detector, preamplifier, and amplifier is shown in the figure. The detector used is a 3.5 cm^3, 13 mm thick lithium-drifted planar germanium diode housed in a cryostat and cooled to 77°K. The preamplifier consists of two sections: a charge integrator and an output driver. The integrator input stage is a field effect transistor. (FET) which is direct-coupled to the detector and also cooled to 77°K. The amplifier consists of two 3-transistor feedback loops with a gain of 16 per loop.

Pulses from the integrating section of the preamplifier rise in 50–150 nsec, as determined by the detector collection time, and decay exponentially with a time constant R_FC_F. The pulses are differentiated in the preamplifier with R_2C_2, and once more in the amplifier with R_5C_4. To prevent undershoots due to the multiple differentiations, pole-zero cancellation is obtained from R_3C_2 and R_6C_4.

To prevent rate effects and drift of the dc level at the output of the amplifier from affecting the baseline, a baseline restorer is used which superimposes each pulse on a stable dc level. The baseline restorer also acts as a nonlinear high-pass filter, thus improving the system signal-to-noise ratio.

Prior to encoding, a pulse is inspected for pileup. A baseline discriminator in the gated single channel analyzer is triggered when an input pulse exceeds the noise level (≈50 mV). Once triggered, the discriminator is held inoperative while the signal exceeds the noise level. The discriminator strobes an internal gate and, when all gating conditions are satisified, a single channel analyzer output is generated. When a second pulse occurs before the tail of the first pulse has returned to within 50 mV of the baseline, the discriminator is not triggered, and thus "tail pileup" pulses are rejected. A pulse starting on the baseline rather than on the tail of a previous pulse may also have a pulse superimposed on the leading edge and thus distorted by "peak pileup". A peak pileup detector produces differentiated zero-crossing pulses, and since the zero-crossing of pileup pulses occur later than that of undistorted pulses, the pileup pulses are readily gated out in the single channel analyzer.

When an undistorted pulse is detected, the linear gate is opened and the selected pulse is processed in the analog-to-digital converter and stored as digital data.

Notes:

1. Additional details may be found in *Rev. Sci. Instr.*, vol. 38, no. 6, p. 725–730, June 1967.
2. Inquiries concerning this innovation may be directed to:

Office of Industrial Cooperation
Argonne National Laboratory
9700 South Cass Avenue
Argonne, Illinois 60439
Reference: B68-10420

Source: M.G. Strauss, I.S. Sherman,
R. Brenner, S. J. Rudnick,
R. N. Larsen, and H.M. Mann
of the Electronics Division
(ARG-10144)

Patent status:

Inquiries about obtaining rights for commercial use of this innovation may be made to:

Mr. George H. Lee, Chief
Chicago Patent Group
U.S. Atomic Energy Commission
Chicago Operations Office
9800 South Cass Avenue
Argonne, Illinois 60439

NASA TECH BRIEF

NASA Tech Briefs are issued to summarize specific innovations derived from the U.S. space program, to encourage their commercial application. Copies are available to the public at 15 cents each from the Clearinghouse for Federal Scientific and Technical Information, Springfield, Virginia 22151.

Readout System for Radiation Detector

An improved electrical circuit, which has been designed, will determine the amount of light detected by a photomultiplier tube when its output signal is in the dark-current range of the tube. The low-intensity light to which the tube responds arises from a thermoluminescent dosimeter which has received ionizing radiation (e.g., X-rays or nuclear radiation) in the range of 10 to 500 milliroentgens. (A thermoluminescent dosimeter emits visible light when it is heated after exposure to the ionizing radiation.) To enable the detection and reliable measurement of very weak sources of light, it is necessary to reduce the dark current and thereby improve the signal-to-noise ratio of the resultant output signal. Previous methods of improving the signal-to-noise ratio, although effective, are relatively complex and often unreliable.

The new circuit utilizes a highly stable variable current source which, when combined with the dark current signal (no light signal fed into the photomultiplier tube), causes the resultant output signal of the circuit to be zero. Thus, when an input light signal is fed into the photomultiplier tube, with the current source equal in magnitude but opposite in polarity to the dark current, the resultant output signal is proportional to the input signal. In this way, low-intensity light signals from a thermoluminescent dosimeter may be readily measured by the circuit.

Note:

Documentation is available from:
Clearinghouse for Federal Scientific
and Technical Information
Springfield, Virginia 22151
Price $3.00
Reference: B68-10501

Patent status:

This invention has been patented by NASA (U.S. Patent No. 3,358,145), and royalty-free license rights will be granted for its commercial development. Inquiries about obtaining a license should be addressed to NASA, Code GP, Washington, D.C. 20546.

Source: K. D. Cashion
and B. R. Baker
(MSC-90180)

Category 01

This document was prepared under the sponsorship of the National Aeronautics and Space Administration. Neither the United States Government nor any person acting on behalf of the United States Government assumes any liability resulting from the use of the information contained in this document, or warrants that such use will be free from privately owned rights.

NASA TECH BRIEF

NASA Tech Briefs are issued to summarize specific innovations derived from the U.S. space program, to encourage their commercial application. Copies are available to the public at 15 cents each from the Clearinghouse for Federal Scientific and Technical Information, Springfield, Virginia 22151.

Long-Term Data Storage and Retrieval System, a Concept

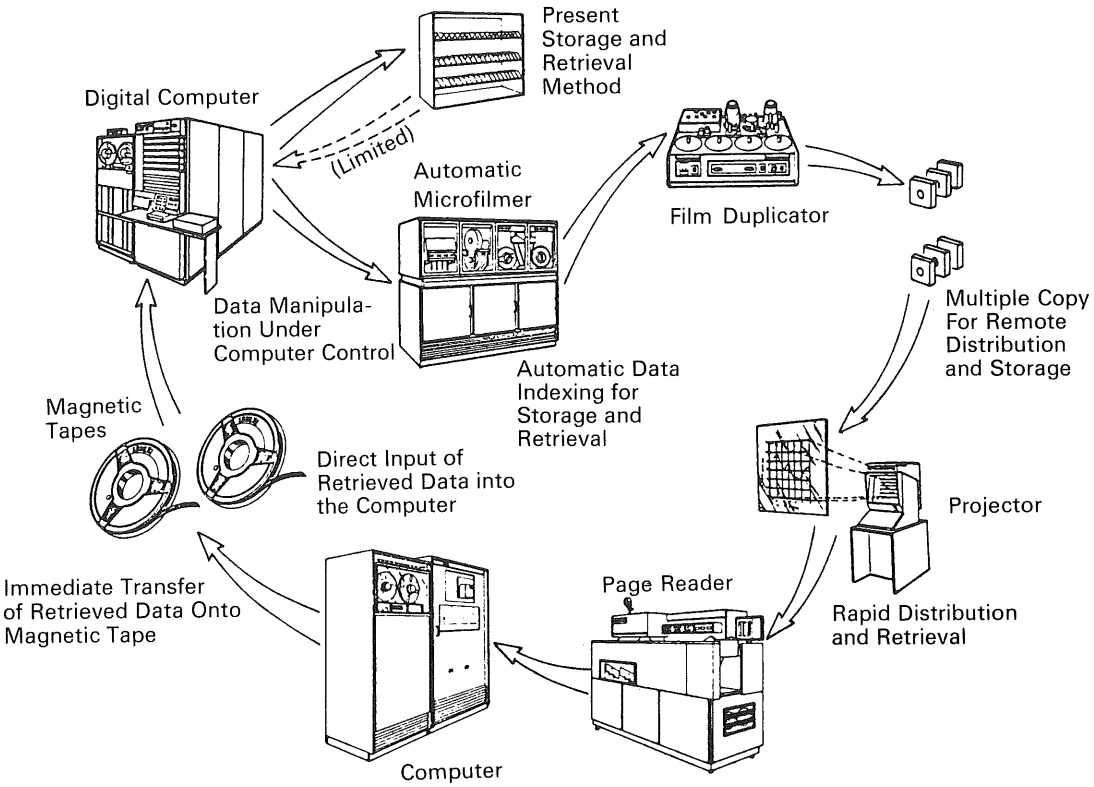

A proposed combination magnetic tape/microfilm system is believed to have potential for reliable long-term storage (periods of up to 50 years) and immediate retrieval of any computer-compatible data. The recording, storage, and retrieval of data would be accomplished by computers, without manual intervention. Present data storage and retrieval systems use magnetic tape which have a limited effective data-storage life (4 to 5 years) and relatively large storage space (approximately 56 cubic feet for 120 tapes). With the proposed system, it should be possible to retrieve data (viewing manually or reading into a computer) in less than 1 hour after being stored for periods of up to 50 years (compared to days required for magnetic tape stored for more than 4-5 years). An amount of data equivalent to that stored on 120 magnetic tapes could be stored on 16 mm microfilm in approximately 4 cubic feet.

In its basic form, the proposed system would use commercially available equipment. The data from a digital computer would be recorded and stored on microfilm. The microfilm data could, if desired, be retrieved and viewed on a display screen. The microfilmed data can also be retrieved and read directly into

(continued overleaf)

This document was prepared under the sponsorship of the National Aeronautics and Space Administration. Neither the United States Government nor any person acting on behalf of the United States Government assumes any liability resulting from the use of the information contained in this document, or warrants that such use will be free from privately owned rights.

a computer. The page reader, responding to commands from the computer, reads the data from the microfilm and transfers this digitized data to a 7-track magnetic tape. A computer listing of the data can also be produced. The magnetic tape can be read into the digital computer and the data retrieved when required over short-term periods.

The basic system could be adapted to the latest developments in lasers and microfilm miniaturization.

Note:

No additional documentation is available. Inquiries may be directed to:

Technology Utilization Officer
Marshall Space Flight Center
Huntsville, Alabama 35812
Reference: B68-10505

Patent status:

No patent action is contemplated by NASA.

Source: T. I. Fox
of The Boeing Company
under contract to
Marshall Space Flight Center
(MFS-14789)

NASA TECH BRIEF

NASA Tech Briefs are issued to summarize specific innovations derived from the U.S. space program, to encourage their commercial application. Copies are available to the public at 15 cents each from the Clearinghouse for Federal Scientific and Technical Information, Springfield, Virginia 22151.

Rocket Engine Analog Simulation

Mathematical equations have been developed for use in simulating the operation of a rocket engine, simulating destructive and nondestructive tests to verify engine design feasibility, and investigating nonlinear variations in engine performance. The mathematical models represent all major engine components, including start tank, gas generator, pumps, turbines, valves, main combustion chamber, and injectors. The equations, which define the operation of the engine system, are scaled for analog computer simulation. The analog simulation data include data for diode function generators and potentiometer settings required to generate equation constants. The simulation system uses three electronic consoles and nine recorders capable of recording 72 engine parameters simultaneously. Total recording capability with the three consoles is 96 channels, which can simultaneously record any combination of engine parameters during a single run.

Although the simulation was designed specifically for a rocket engine, a portion of the information, specifically that dealing with pump design feasibility and cavitation characteristics, should be of interest to pump design engineers in nonaerospace industries.

Note:

Documentation for the innovation is available from:
Clearinghouse for Federal Scientific
and Technical Information
Springfield, Virginia 22151
Price $3.00
Reference: B68-10511

Patent status:

No patent action is contemplated by NASA.

Source: B. K. Philyaw
and G. J. Randazzo
of The Boeing Company
under contract to
Marshall Space Flight Center
(MFS-14511)

Category 01

This document was prepared under the sponsorship of the National Aeronautics and Space Administration. Neither the United States Government nor any person acting on behalf of the United States Government assumes any liability resulting from the use of the information contained in this document, or warrants that such use will be free from privately owned rights.

NASA TECH BRIEF

NASA Tech Briefs are issued to summarize specific innovations derived from the U.S. space program, to encourage their commercial application. Copies are available to the public at 15 cents each from the Clearinghouse for Federal Scientific and Technical Information, Springfield, Virginia 22151.

Method for Measuring Alternator Voltage Transients

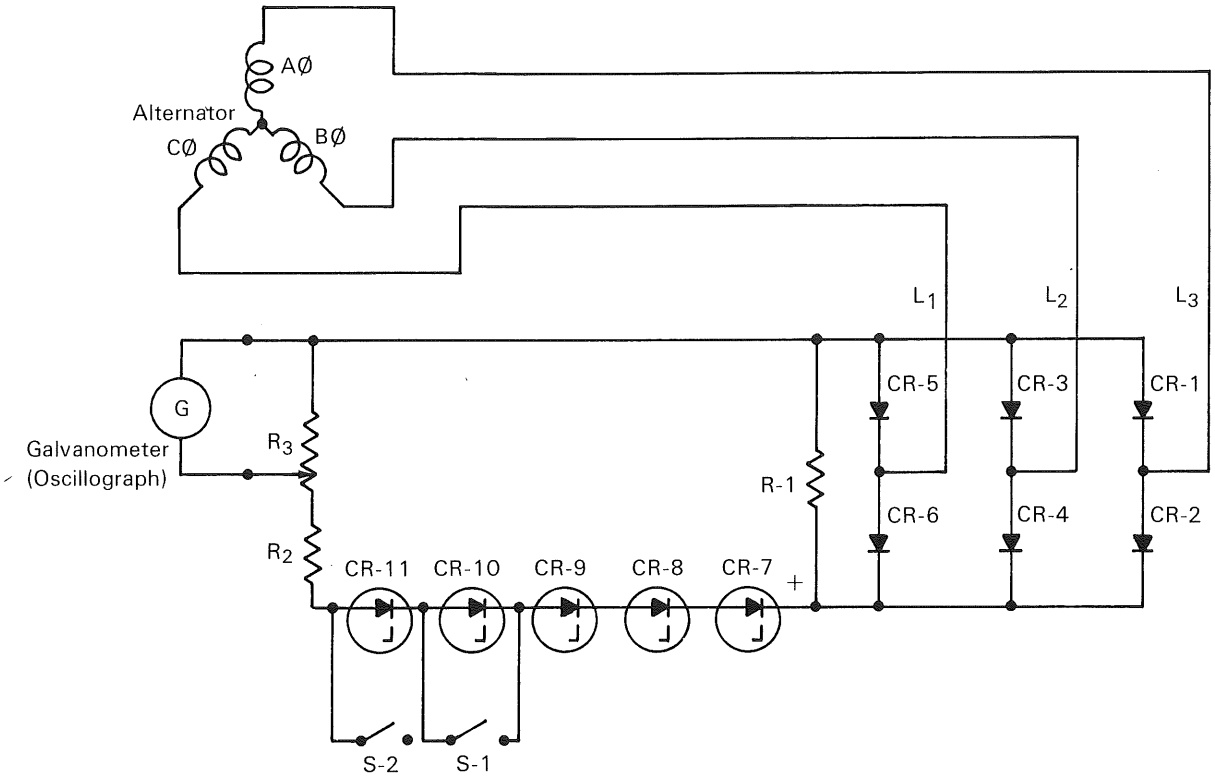

A transient voltage detection circuit was built to measure voltage excursions and recovery times resulting from step-load changes applied to a combination alternator–voltage regulator. The circuit mainly consists of a three-phase full-wave bridge, zener diodes to step down the voltage, and an oscillographic recorder.

As shown in the figure, the three alternator phase voltages (L_1, L_2, L_3) are fed into a three-phase, full-wave bridge (CR-1 through CR-6). The direct current output is dropped down by 36 volts for each zener diode (CR-7 through CR-11). The total voltage drop is determined by switches S-1 and S-2. S-1 and S-2 are necessary to short out two zener diodes in those cases where the load applied to the alternator is sufficient to cause a voltage undershoot which falls below the total breakover voltage of the zener diodes in series. If this were allowed to happen, the zener diodes would no longer conduct and the galvanometer would not follow the voltage excursion. Resistor R-1 is used to assure sufficient current through the bridge at all times. This ensures linear operation of CR-1 through

(continued overleaf)

This document was prepared under the sponsorship of the National Aeronautics and Space Administration. Neither the United States Government nor any person acting on behalf of the United States Government assumes any liability resulting from the use of the information contained in this document, or warrants that such use will be free from privately owned rights.

CR-6. Resistors R-2 and R-3 are used for the calibration of the oscillograph.

Notes:

1. The circuit is an inexpensive, fast AC–DC converter. It can be of particular use when testing three-phase systems or high-voltage DC systems where oscillographic data is needed.
2. The most important feature of this circuit is that it has a very small, insignificant time constant because no reactive components such as step-down transformers are used. Therefore, the time response data is inherently more accurate.
3. Documentation for the innovation is available from:

   Clearinghouse for Federal Scientific
   and Technical Information
   Springfield, Virginia 22151
   Price $3.00

   Reference: B68-10513

Patent status:

No patent action is contemplated by NASA.

Source: Dennis A. Perz
(LEW-10373)

NASA TECH BRIEF

NASA Tech Briefs are issued to summarize specific innovations derived from the U.S. space program, to encourage their commercial application. Copies are available to the public at 15 cents each from the Clearinghouse for Federal Scientific and Technical Information, Springfield, Virginia 22151.

Integrated Metal Transistor Leads

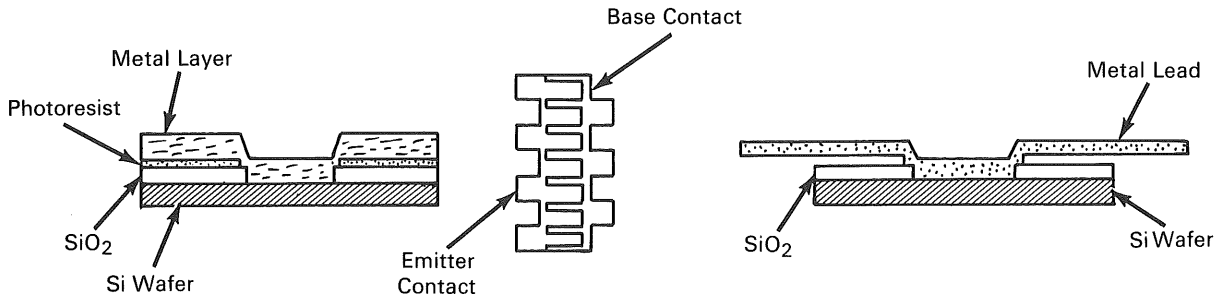

The problem:

In the conventional manufacture of transistors, large pellet bonding terminals are required as targets for the bonded lead wires and contribute to device capacitance. Additionally, the incidence of bonding lead wires having different lengths is a factor that results in an increased inductance to those emitters being fed by the longer wires and subsequent degeneration in their injection.

The solution:

A technique that makes the metal leads integral to the transistor wafer. This appreciably reduces capacitance in the device, thereby increasing its efficiency.

How it's done:

After defining the base contacts in the oxide and depositing Au in the openings, the wafer is again coated with a photoresist and an opening is made in the resist. A layer (60,000–100,000 Å) of Al is then evaporated over the surface of the wafer, forming the composite structure shown in the left figure. The metal is next coated with photoresist and defined by electrolytic etching to produce a pattern on each pellet in the form shown in the center figure.

The wafer is next scribed on each side by standard scribing techniques to assist separation of the individual pellets, accomplished by placing the wafer in hot benzene sulphuric acid which dissolves all the photoresist, leaving pellets like that shown in the right figure.

Notes:

1. Measurements made on TA2675 devices fabricated with integral leads and fabricated with wire-bonded leads showed a 26% capacitance reduction in the integral lead device.
2. In using integral leads, length of the bond wires is controlled by photolithographic techniques, assuring equal inductance to the pellet.
3. No additional documentation is available. Inquiries may be directed to:

   Technology Utilization Officer
   Goddard Space Flight Center
   Greenbelt, Maryland 20771
   Reference: B68-10518

Patent status:

No patent action is contemplated by NASA.

Source: E. T. Casterline and D. R. Carley
of Radio Corporation of America
under contract to
Goddard Space Flight Center
(GSC-90536)
Category 01

This document was prepared under the sponsorship of the National Aeronautics and Space Administration. Neither the United States Government nor any person acting on behalf of the United States Government assumes any liability resulting from the use of the information contained in this document, or warrants that such use will be free from privately owned rights.

NASA TECH BRIEF

NASA Tech Briefs are issued to summarize specific innovations derived from the U.S. space program, to encourage their commercial application. Copies are available to the public at 15 cents each from the Clearinghouse for Federal Scientific and Technical Information, Springfield, Virginia 22151.

Digital Laser-Beam Deflection Sensor

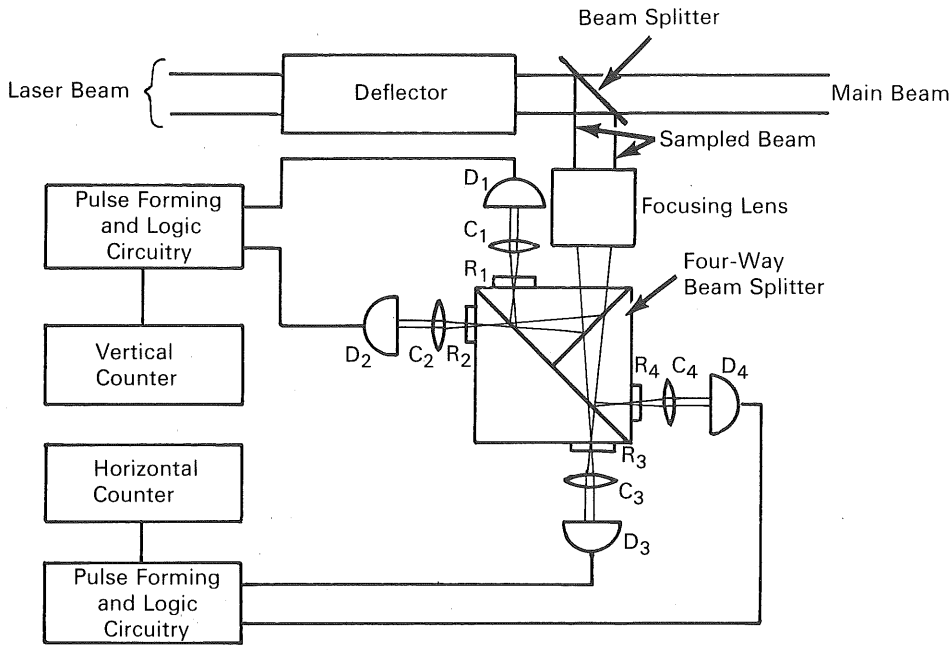

R_1-R_4 Ronchi Rulings

C_1-C_4 Condensing Lenses

D_1-D_4 Photodetectors

This sensor automatically and accurately measures the two-dimensional deflection angles of a laser beam to provide closed-loop servomechanism control of laser beam directivity. The sensor incorporates beam splitters, focusing and condensing lenses, Ronchi rulings, photodetectors, and pulse forming and logic circuitry. The accuracy of this sensor is reported to be approximately four times as great as that of other systems of angle sensing.

A portion of the deflected beam, sampled by the beam splitter, is passed through the focusing lens. A four-way beam splitter is employed after this lens to allow the focused beam to fall on each of four Ronchi rulings which are placed in the split focal plane. Two of the rulings, R_1 and R_2, are set so that their lines run horizontally, and the other two, R_3 and R_4, are set so that their lines run vertically. The two sets of rulings are perpendicular to each

(continued overleaf)

This document was prepared under the sponsorship of the National Aeronautics and Space Administration. Neither the United States Government nor any person acting on behalf of the United States Government assumes any liability resulting from the use of the information contained in this document, or warrants that such use will be free from privately owned rights.

other to within ± 0.1 milliradian and detect horizontal and vertical deflection, respectively. To make this relationship permanent, the rulings are securely bonded to the fused silica block forming the four-way beam splitter. As the spot of focused light moves across the alternate opaque and transparent stripes of the rulings, pulses of light are transmitted to the photodetectors which give electrical output pulses corresponding to beam movement. Discrimination between positive-going and negative-going deflection is obtained by sensing the relative phases from each pair of photodetectors connected to the pulse forming and logic circuitry. The resultant pulses are counted as dictated by the pulse phases to establish the beam position. The maximum deflection rates to which the sensing system will respond are limited by the counter response to about 4×10^6 spots per second.

Note:

Details may be obtained from:

Clearinghouse for Federal Scientific and Technical Information
Springfield, Virginia 22151
Price $3.00
Reference: B68-10525

Patent status:

Inquiries about obtaining rights for the commercial use of this invention may be made to NASA, Code GP, Washington, D.C. 20546.

Source: V. J. Fowler
of General Telephone and Electronics Labs.
under contract to
Marshall Space Flight Center
(MFS-14785)

NASA TECH BRIEF

NASA Tech Briefs are issued to summarize specific innovations derived from the U.S. space program, to encourage their commercial application. Copies are available to the public at 15 cents each from the Clearinghouse for Federal Scientific and Technical Information, Springfield, Virginia 22151.

Improved Communication System for Large Operations Center

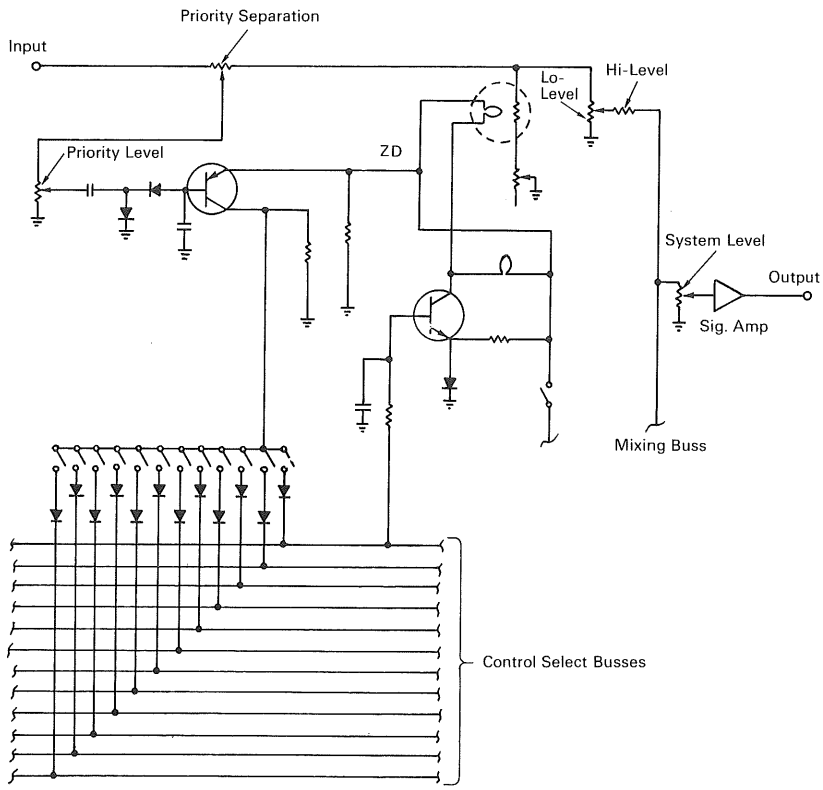

A problem generally exists when using several microphones fed into a common system. Sound originating at any given signal source and picked up by multiple microphones, provides an effect similar to multiple sources picked up by a single microphone. This effect results in poor articulation (speech clarity) at the output (speaker) because of the varying phase shift at different frequencies and distances.

This problem is largely overcome by introduction into the system of an automatic microphone priority control. Priority is established by an increase of sound level in any single microphone, which causes a simultaneous gain reduction in the amplifiers connected to the remaining microphones. This action suppresses echo and reverberation as a result of the recovery delay incorporated in the circuitry.

The figure illustrates one application of the technique. Priority control distributors (control select) provide negative bias voltage to the input stage of each priority control amplifier. When this voltage

(continued overleaf)

This document was prepared under the sponsorship of the National Aeronautics and Space Administration. Neither the United States Government nor any person acting on behalf of the United States Government assumes any liability resulting from the use of the information contained in this document, or warrants that such use will be free from privately owned rights.

is increased, the gain of the input stage of the affected priority control amplifier is reduced. There are 12 priority control distributors in the system. Each distributor input is connected to the dc control output voltage of one of the priority control amplifiers. This output is routed through an isolation diode to 8 or 9 of the 12 priority control amplifier input stages.

The purpose of the signal distribution network is to mix and distribute the signal picked up by the microphones through the amplifiers and speakers at levels relative to the distance from each microphone to each of the speakers. Input to the signal distribution network is made from the output of the 12 priority control amplifiers, while output of the network is connected to the inputs of 16 speaker power amplifiers. The gain between any given microphone and each speaker is controlled by the signal distribution network and preset at slightly less than the acoustic attenuation between them.

Notes:

1. Hum-bucking coils are installed in all microphones to reduce magnetic field interference caused by current-carrying media in the environment.
2. The increased audio communication capability inherent in this system should give added effectiveness to centralized management functions in complex operations.
3. Documentation is available from:

   Clearinghouse for Federal Scientific and Technical Information
   Springfield, Virginia 22151
   Price $3.00
   Reference: B68-10529

Patent status:

Inquiries about obtaining rights for the commercial use of this invention may be made to NASA, Code GP, Washington, D.C. 20546.

Source: Melvin S. Draper
of The Boeing Company
under contract to
Marshall Space Flight Center
(MFS-15016)

NASA TECH BRIEF

NASA Tech Briefs are issued to summarize specific innovations derived from the U.S. space program, to encourage their commercial application. Copies are available to the public at 15 cents each from the Clearinghouse for Federal Scientific and Technical Information, Springfield, Virginia 22151.

Inverted Grounding Technique for Electron Beam Heating

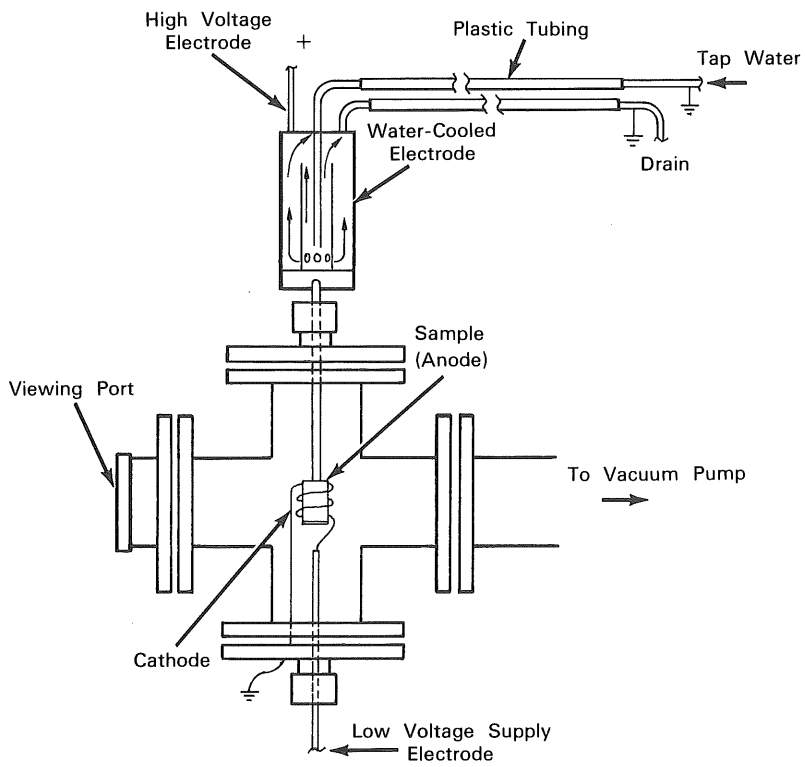

Conventionally, in the production of high temperatures by electron bombardment the anode is held at ground potential while the hot cathode is raised to a high negative potential. This practice is employed primarily to eliminate cold cathode discharge around grounded surfaces inside the vacuum chamber. It also provides a convenient means of heat-sinking the anode supporting structure through conduction directly to the normally massive chamber walls.

There is a distinct advantage to be realized, however, if the cathode can instead be grounded. In an all-metal chamber, the electron beam from a grounded cathode is effectively focused electrostatically by the chamber walls. In the conventional arrangement, an additional element is required to contain the beam. This element ordinarily encloses both the cathode and anode, and is electrically connected to the highly negative cathode. The elimination of this shielding allows a substantial reduction in the size of the vacuum chamber, since the allowance of sufficient space between the chamber walls and internal members at cathode potential to prevent electrical breakdown is

(continued overleaf)

This document was prepared under the sponsorship of the National Aeronautics and Space Administration. Neither the United States Government nor any person acting on behalf of the United States Government assumes any liability resulting from the use of the information contained in this document, or warrants that such use will be free from privately owned rights.

no longer a factor. In addition, its elimination removes a potential source of contamination in the vacuum system. This is particularly important in the annealing of high purity refractory metals near their melting points in vacua in excess of 10^{-8} torr. The high vacua required in these applications to attain acceptable impurity levels within the chamber makes possible the operation of a grounded cathode system without an attendant cold cathode discharge.

Shown in the accompanying figure is an annealing chamber using the inverted grounding. It is constructed around a commercially available stainless steel "cross." Single insulated-electrode high-temperature flanges provide the necessary electrical feed-throughs: one to the sample holder anode, the other to one side of the wire cathode. The cathode return is made by connection directly to the grounded flange. Heat conducted along the sample holder is satisfactorily removed at the flange by a water cooled electrode attachment. The length of the plastic lines carrying the cooling water is dictated by the conductivity of the locally available water and by the cross-sectional area of the tubing so as to keep the leakage currents through the water within tolerable limits.

Such a system is successfully being employed in the annealing of high purity single crystals of niobium and similar metals.

Notes:

1. No additional documentation is available for this invention.
2. Technical questions concerning this invention may be directed to:

   Technology Utilization Officer
   Lewis Research Center
   21000 Brookpark Road
   Cleveland, Ohio 44135
   Reference: B68-10411

Patent status:

Inquiries about obtaining rights for the commercial use of this invention may be made to NASA, Code GP, Washington, D.C. 20546.

Source: Russell J. Jirberg
(LEW-10543)

NASA TECH BRIEF

NASA Tech Briefs are issued to summarize specific innovations derived from the U.S. space program, to encourage their commercial application. Copies are available to the public at 15 cents each from the Clearinghouse for Federal Scientific and Technical Information, Springfield, Virginia 22151.

Automatic Calibration System for Pressure Transducers

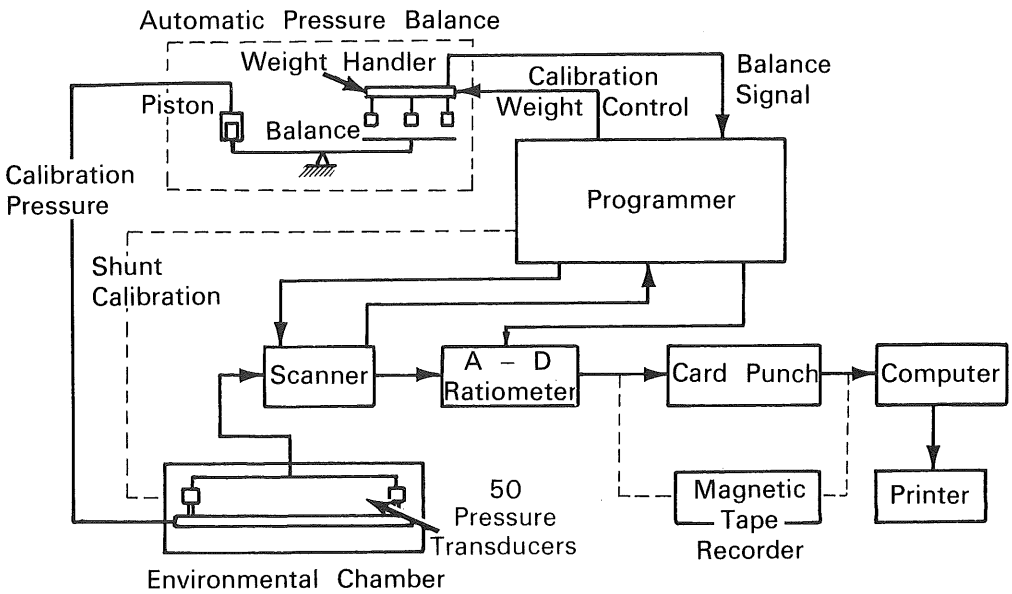

Calibration of individual pressure transducers at different temperatures, using as a calibration standard the conventional dead weight tester, would require many manhours, large amounts of space, and large duplications of equipment, resulting in great cost per unit calibrated. Calibration output was increased by manifolding a larger number of gages with the same range, but this method required the use of transfer standards, manual pressure regulations, and individual readings. The use of secondary standards is the greatest disadvantage of this method, but manual pressure regulation and the large chance for human errors are also very undesirable. It was evident, that a more basic standard, automatic operation, and manifolding of a large number of gages would be necessary to increase quantity and accuracy for test, evaluation, and calibration of pressure transducers. These problems were solved with the 50-channel automatic pressure transducer calibration system.

The pressure transducers to be calibrated are installed in an environmental test chamber and manifolded to connect them to the pressure balance which

(continued overleaf)

This document was prepared under the sponsorship of the National Aeronautics and Space Administration. Neither the United States Government nor any person acting on behalf of the United States Government assumes any liability resulting from the use of the information contained in this document, or warrants that such use will be free from privately owned rights.

is the calibration pressure source and standard. The test chamber provides a temperature range of −120° to +350°F (188.7° to 449.8°K); it takes up to two hours to reach temperature stability and equilibrium when the temperature setting is changed.

The programmer controls the binary coded signals for all steps of the operation; it has the following four subunits: pressure control matrix, shunt control matrix, system or logic control matrix, and computer.

Four selector switches serve to dial the full-scale pressure desired for the calibration, and additional push-button switches program the computer to perform calibrations in the desired steps and increments. For shunt calibration, the programmer connects the transducer bridges either with the shunt calibration resistors in the programmer box or with the shunt resistors built into the transducers.

The scanner sequentially connects all transducers to the analog-to-digital ratiometer. This ratiometer compares the output signals of the connected transducer with the voltage of a reference power supply and applies the millivolt/volt output–input ratio in digital form to the card punch or magnetic tape recorder. A standby power supply provides normal excitation of the transducers, and when the scanner connects a transducer to the ratiometer, the excitation of the transducer is switched to the reference voltage. The reference power supply is periodically checked when the scanner connects it to a calibration standard which provides precision dc voltage.

The output of the digital ratiometer is recorded on punch cards, together with temperature, barometric pressure, and programming instructions. A coded formula identifies channel numbers and pressure steps or shunt calibration steps. The IBM 526 printing summary punch is used. This multipurpose machine has a programming drum and is suitable for various recording and controlling applications.

The punched cards are sorted and printed out locally for checks and raw data files. Calculations are performed to determine sensitivity, linearity, hysteresis, temperature characteristics, and deviation limits. A summary sheet of these data provides quick-look information about the usefulness of a transducer for a special application. Then shunt calibrations are made with the real data acquisition systems at the test stands or wherever the transducers are used. The combination of pressure and shunt calibrations in the laboratory, and the shunt calibrations in the field satisfy all calibration requirements and provide very reliable calibration data for evaluation of the field measurement.

Note:

No additional documentation is available. Questions may be directed to:

Technology Utilization Officer
Marshall Space Flight Center
Huntsville, Alabama 35812
Reference: B68-10412.

Patent status:

Inquiries about obtaining rights for the commercial use of this invention may be made to NASA, Code GP, Washington, D.C. 20546

Source: Vitro Services Division
of Vitro Corporation of America
(MFS-14914)

NASA TECH BRIEF

NASA Tech Briefs are issued to summarize specific innovations derived from the U.S. space program, to encourage their commercial application. Copies are available to the public at 15 cents each from the Clearinghouse for Federal Scientific and Technical Information, Springfield, Virginia 22151.

UV Detector Monitors Organic Contamination of Optical Surfaces

Cetain outgassed products of organic materials tend to degrade the optical properties of lenses and lens systems, mirrors, or windows, particularly in closed systems. Such contamination is often difficult to monitor, since conventional photodetectors must be shielded from ambient light. However, silicon carbide (SiC) ultraviolet detectors have a peak spectral response at 2800 to 3800 angstroms and thus are insensitive to visible light and are nearly solar blind. Such detectors can produce a photovoltage of 1 millivolt to 1.6 volts, depending on the incident flux density. The obvious advantage of such detectors is that system contamination can be monitored during normal operation without interference to the operator and without the problems of excluding ambient light from the detector.

SiC detectors could be employed to determine the effects of contamination on UV transmittance and reflectance measurements in laboratory thermo-vacuum systems. Also, the detectors could be attached directly to the lenses of various optical systems to continuously monitor changes due to contamination buildup. Typical uses are in various research laboratories, television and photographic studios, and astronomical observatories.

Note:

No additional documentation is available. Questions may be directed to:

Technology Utilization Officer
Marshall Space Flight Center
Huntsville, Alabama 35812
Reference: B68-10413

Patent status:

Inquiries about obtaining rights for the commercial use of this invention may be made to NASA, Code GP, Washington, D.C. 20546.

Source: B. W. Kennedy and C. G. Glenn
(MFS-20246)

Category 01

This document was prepared under the sponsorship of the National Aeronautics and Space Administration. Neither the United States Government nor any person acting on behalf of the United States Government assumes any liability resulting from the use of the information contained in this document, or warrants that such use will be free from privately owned rights.

NASA TECH BRIEF

NASA Tech Briefs are issued to summarize specific innovations derived from the U.S. space program, to encourage their commercial application. Copies are available to the public at 15 cents each from the Clearinghouse for Federal Scientific and Technical Information, Springfield, Virginia 22151.

Design Concept for a Rapid Automatic Sync Acquisition System

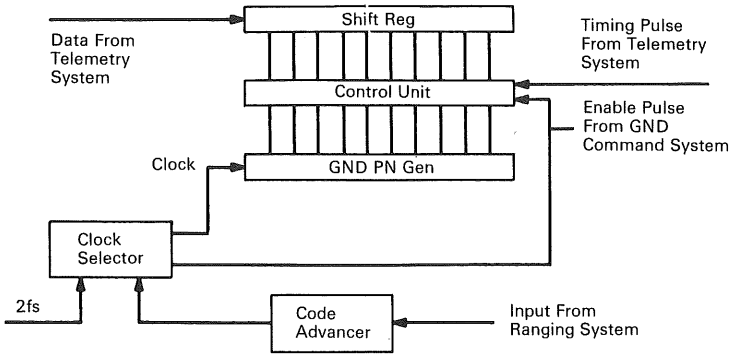

GROUND SYSTEM

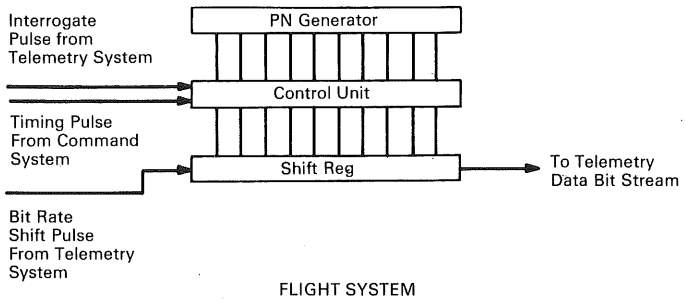

FLIGHT SYSTEM

A design has been conceived for a system intended to provide rapid command sync acquisition between widely separated transmitter-receivers, such as between a spacecraft telemetry transmitter and a ground-based receiver. Use of the system in commercial satellite communications would facilitate rapid sync acquisition between stations and regaining of data lock after interruption or equipment failure. The system is based on a rapid, automatic range-adjustment approach rather than the time-consuming cycle slipping or stepping techniques of conventional phase-locked loops.

The basic scheme of the proposed system is that of a one-step adjustment of the ground PN code generator in order to make it synchronous with the flight PN generator. The state or phase of the flight PN generator is transmitted to Earth via the telemetry channel, and the status of the flight PN generator is detected by the ground system. This information is then used to set the ground PN generator. Assuming there were no delays in the telemetry processing and transmission time, the above process would cause synchronization between the two systems. Inasmuch

(continued overleaf)

This document was prepared under the sponsorship of the National Aeronautics and Space Administration. Neither the United States Government nor any person acting on behalf of the United States Government assumes any liability resulting from the use of the information contained in this document, or warrants that such use will be free from privately owned rights.

as there is processing time and propagation time involved, these parameters must be accounted for. Once the ground PN generator is set by the telemetry information, it would be clocked rapidly by the code advancer to account for the delays. The code advancer, it should be noted, derives its data from the ranging system. Assume the total time elapsed between sampling of the flight PN generator and transmission of the ground PN code is T seconds. By multiplying T by the total number of symbols which appear in the PN sequence, the status of the flight command code generator can be predicted. Only the fractional second-portion of the delay time is used.

At the proper time in the telemetry bit stream, a pulse is initiated in the telemetry system which attempts to activate the control unit. The purpose of the control unit is to transfer the information from the flight command PN code generator into a shift register which will be clocked out in the telemetry bit stream at the bit rate. To prevent sampling of the flight PN generator during a transition time, a timing pulse from the command system is required, in addition to the interrogate pulse from the telemetry system, to activate the control unit.

Lock is obtained by this sequence of events: The information from the telemetry bit stream is recovered and shifted into a register in the ground system. Upon completion of the input information, the coincidence of a timing pulse from the telemetry system and an enable pulse from the command system causes the ground control unit to set the ground PN generator. This action causes the ground code to represent the condition of the flight PN generator at the sample time. Since the flight code generator has changed status during the transmission and processing time, it is necessary to predict where the flight PN generator will be at the time of transmission to the spacecraft. This prediction must then be used to advance the ground PN generator. The function of the code advancer is to provide high frequency clock pulses to advance the ground generator to coincide with the flight generator. The number of pulses generated is dependent upon the total propagation and telemetry process time. The code advancer, it is proposed, will receive the propagation time information directly from the ranging system or through extrapolation. Since the code is repetitious at 1 bps, multiples of 1 second are discarded; only the fractional portions of a second which represent the phase difference between the two codes are utilized.

The proposed system implementation will cause the spacecraft to receive a code which is in phase or very close to being in phase, depending upon the tolerances involved. To overcome some of the problems associated with the tolerances, the codes will be transmitted a fixed number of PN symbols out of phase. The two codes will then drift with respect to one another for a short period of time until lock is acquired.

Using a system such as this, it would not be unrealistic to achieve lock times in the order of a few seconds. In contrast with the present lock techniques, this number would be fixed. Present systems such as those used on Mariner '69 require anywhere from 0 second to 9 minutes to acquire lock.

Note:

This system is only in the conceptual stage; neither a model nor a prototype has been built as of the date of this Tech Brief.

Patent status:

This invention is owned by NASA, and a patent application has been filed. Royalty-free, nonexclusive licenses for its commercial use will be granted by NASA. Inquiries concerning license rights should be made to NASA, Code GP, Washington, D.C. 20546.

Source: T. O. Anderson and A. J. Gallo
Jet Propulsion Laboratory
(NPO-10214)

NASA TECH BRIEF

NASA Tech Briefs are issued to summarize specific innovations derived from the U.S. space program, to encourage their commercial application. Copies are available to the public at 15 cents each from the Clearinghouse for Federal Scientific and Technical Information, Springfield, Virginia 22151.

Conditioning Flat Conductors for Flat Conductor Cable Production

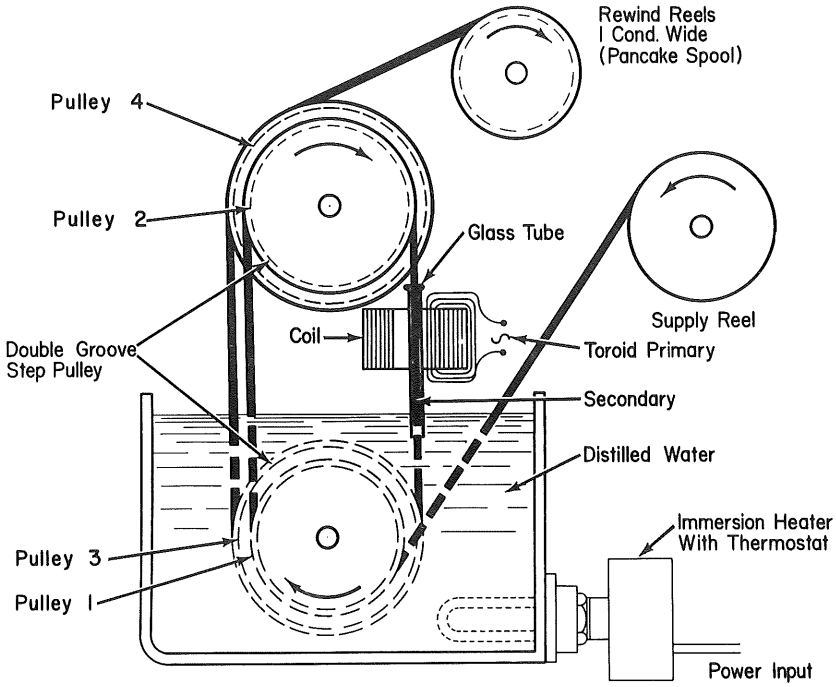

The problem:

To provide an apparatus for processing flat conductors before the conductors are laminated into flat conductor cable. The precision spacing of flat conductor cables requires that the conductors be straight (no kinks and bends), uniform in cross-sectional area, and annealed.

The solution:

An apparatus that will straighten, anneal, clean, and apply a tension to stretch the cable approximately one percent to assure a uniform cross-sectional area.

Method of operation:

The conductor is reeled from a supply spool, around pulleys 1 and 2 and forms the secondary coil of a transformer. The conductor passes through distilled water that is temperature-controlled by a thermostat and immersion heater and through a toroid coil. As the conductor (heated as the secondary circuit of the transformer) enters the water, steam is developed to perform the cleaning action. Quenching and annealing also take place. The conductor passes over four grooved pulleys. Pulleys 3 and 4 have one percent larger diameter than pulleys 1 and 2, causing the conductor to be stretched by one percent. The slight stretching assures that the conductor is straight and

(continued overleaf)

This document was prepared under the sponsorship of the National Aeronautics and Space Administration. Neither the United States Government nor any person acting on behalf of the United States Government assumes any liability resulting from the use of the information contained in this document, or warrants that such use will be free from privately owned rights.

uniform. To prevent new deformations and defects, the conductor is wound onto a spool having the width of one conductor only. This spool is used as a dispenser during cable production.

Patent status:

Title to this invention has been waived under the provisions of the National Aeronautics and Space Act [42 U.S.C. 2457 (f)] to the Schjeldahl Company, Northfield, Minnesota 55057.

Source: G. T. Schjeldahl Company
under contract to
Marshall Space Flight Center
(MFS-20127)

NASA TECH BRIEF

NASA Tech Briefs are issued to summarize specific innovations derived from the U.S. space program, to encourage their commercial application. Copies are available to the public at 15 cents each from the Clearinghouse for Federal Scientific and Technical Information, Springfield, Virginia 22151.

System Converts Optical Phase Changes to RF Phase Changes

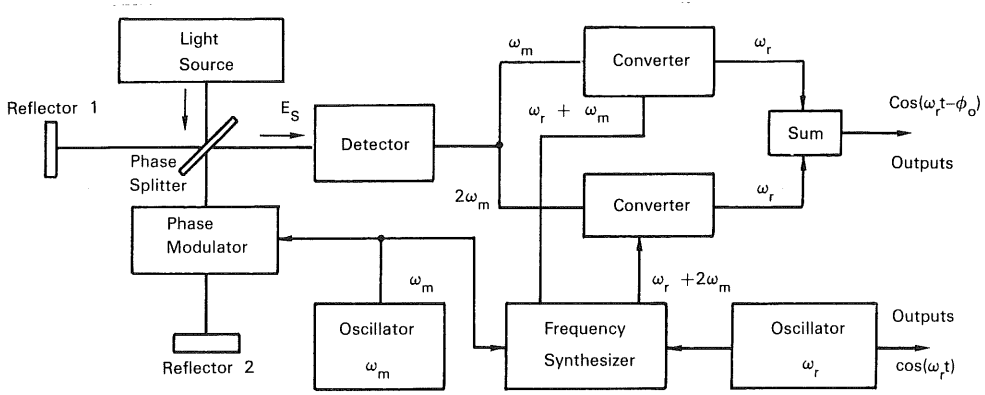

The system, represented in the block diagram, was developed to convert phase changes at optical (light) frequencies to equal phase changes at rf (radio frequencies). This system can operate in conjunction with either a Michelson interferometer (block diagram) or other conventional interferometer.

Light from the source arrives at the detector by way of reflector 1 and reflector 2. Light from the latter passes through a light phase modulator. The sum of the light fields at the detector can be represented as

(1)
$$E_s = E_1 \cos \omega t + E_2 \cos(\omega t - \phi),$$

where E_1 and E_2 are the light field, and ω is the light frequency. The two light beams differ in phase by some arbitrary amount, ϕ. The detector output signal is proportional to the total input light power:

(2)
$$\overline{E_1^2} = \tfrac{1}{2}E_1^2 + \tfrac{1}{2}E_2^2 + E_1E_2\cos\phi$$

The phase modulator applies sinusoidal phase modulation to one arm of the interferometer at a frequency ω_m, with a deviation amplitude $\Delta\phi$:

(3)
$$\phi = \phi - \Delta\phi \sin \omega_m t$$

The average phase difference between interferometer arms, ϕ_o, is to be measured. The quantity of interest in Equation (2) is $\cos \phi$. Using Equation (3) and expanding $\cos \phi$ in terms of trigonometric and Bessel function identities, and selecting only the first and second harmonics, gives detector outputs of:

(4)
$$2J_1(\Delta\phi)\sin\phi_o \sin(\omega_m t) + 2J_2(\Delta\phi)\cos\phi_o\cos(2\omega_m t)$$

Conventional frequency synthesizer and frequency conversion techniques shown in the block diagram are used to convert these two terms to a common frequency, ω_r. The modulation index $\Delta\phi$ is adjusted to make the Bessel coefficients equal: $J_1(\Delta\phi) = J_2(\Delta\phi)$. Then Equation (4) can be reduced to:

(5)
$$\sin\phi_o \sin(\omega_r t) + \cos\phi_o \cos(\omega_r t) = \cos(\omega_r t - \phi_o)$$

Thus the two light inputs are of the form $\cos(\omega t - \phi)$ and $\cos \omega t$, and the two output electrical signals are $\cos(\omega_r t - \phi_o)$ and $\cos(\omega_r t)$, which is the desired conversion. The phase between the two outputs is measured with conventional phase meters.

(continued overleaf)

This document was prepared under the sponsorship of the National Aeronautics and Space Administration. Neither the United States Government nor any person acting on behalf of the United States Government assumes any liability resulting from the use of the information contained in this document, or warrants that such use will be free from privately owned rights.

Note:

No additional documentation is available. Questions may be directed to:

Technology Utilization Officer
Marshall Space Flight Center
Huntsville, Alabama 35812
Reference: B68-10430

Patent status:

Inquiries about obtaining rights for the commercial use of this invention may be made to NASA, Code GP, Washington, D.C. 20546.

Source: S. S. Logue
of General Dynamics/Convair
under contract to
Marshall Space Flight Center
(MFS-20091)

NASA TECH BRIEF

NASA Tech Briefs are issued to summarize specific innovations derived from the U.S. space program, to encourage their commercial application. Copies are available to the public at 15 cents each from the Clearinghouse for Federal Scientific and Technical Information, Springfield, Virginia 22151.

Charge Control of Nickel–Cadmium Batteries by Coulometer and Third Electrode Method

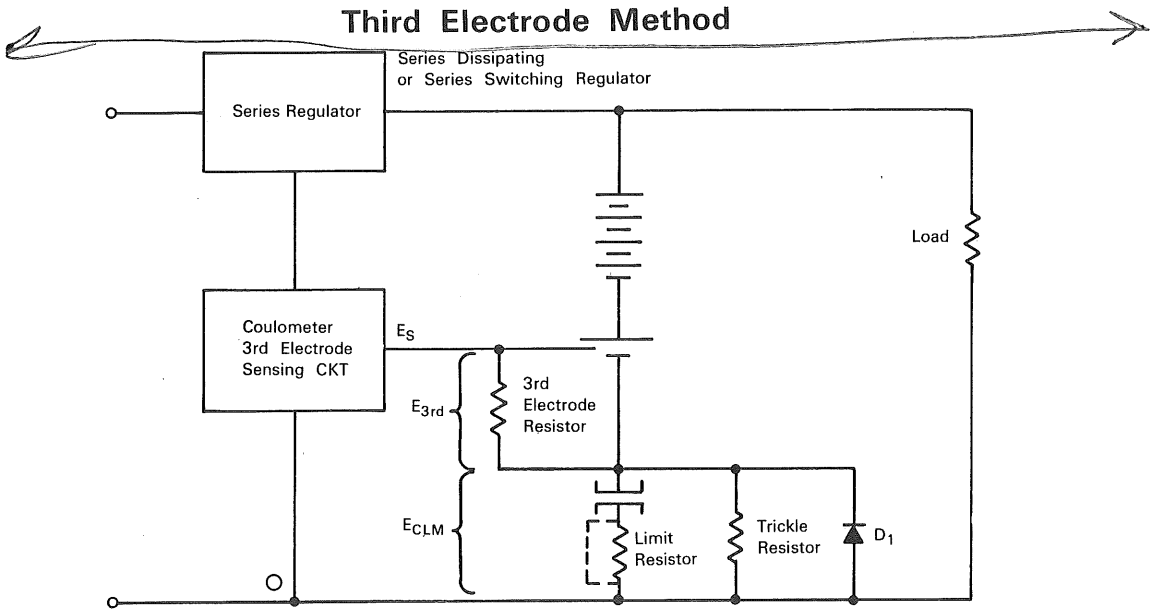

In the charge control of nickel–cadmium batteries that are frequently changed from a charge to a discharge condition, prior methods have left much to be desired. Constant current charging is slow because the charge current rate is limited by the safe overcharge current for battery and system. Because of the low charge currents and the limited time for recharging, only a fraction of the battery ampere-hour capacity is available during discharge. Such conditions are experienced by an orbiting satellite. Constant potential charging suffers from the nickel–cadmium battery's voltage characteristic of temperature dependency. The charge current is limited only by the solar array capability, the battery accepting all available current until the selected voltage is reached. A faster charge is possible with this method but the temperature-dependent voltage of the battery must be "tracked" by the charger. Because of this voltage characteristic, the charge voltage must be precisely regulated to prevent excessive overcharge. An additional disadvantage is that failure of any one cell due to a short may be catastrophic to the battery. Coulometer control alone provides an abrupt signal when the ampere-hours removed during discharge have been replaced. Because a nickel–cadmium battery is only 85% to 90% efficient, the battery is not fully charged when this signal occurs and additional charging is required. Third electrode charge control alone regulates overcharge by sensing the oxygen partial pressure within a battery cell and providing a signal proportional in amplitude to this pressure. The method suffers from slow response time in applications where short discharge periods (30 minutes or less) are encountered.

(continued overleaf)

This document was prepared under the sponsorship of the National Aeronautics and Space Administration. Neither the United States Government nor any person acting on behalf of the United States Government assumes any liability resulting from the use of the information contained in this document, or warrants that such use will be free from privately owned rights.

The figure illustrates a combined coulometer/third electrode control circuit for a nickel–cadmium battery including at least one cell of the third electrode type. The coulometer/third electrode sensing circuit controls the series regulator as necessary to maintain the sensing voltage at the preset sensing level. Assume that the sensing circuit is designed for 0.5 volts at sensing lead (E_s), where E_s is the sum of E_{CLM} and $E_{3rd\,el}$. If the third electrode voltage plus the coulometer voltage reaches 0.5 volts the sensing circuit reduces the drive signal to the series regulator as necessary to maintain the voltage (E_s) at 0.5 volts. If the third electrode voltage plus the coulometer voltage is less than 0.5 volts then the series regulator is full "on" delivering available current to the battery. When the ampere-hours passed through the coulometer on discharge has been replaced, the coulometer voltage will increase rapidly toward 0.5 volts. With 0.5 volts across the coulometer (the coulometer looks like an open circuit when fully "set") the battery current is then determined by the trickle resistor. In effect the voltage (E_s) is regulated at 0.5 volts by the regulator once the coulometer is "set". The battery trickle current is then related to the ohmic value of the trickle resistor. The higher the resistance value the lower the trickle charge rate, and conversely, the lower the resistance the higher the trickle charge rate.

A trickle resistor selected so that moderate trickle rates are maintained allows the battery to continue charging and go into overcharge at a safe rate as the third electrode signal begins to increase. An increasing third electrode signal indicates the battery is fully charged and further charging is unnecessary. Since the voltage (E_s) is being regulated at 0.5 volts the battery trickle rate is further decreased. Now the third electrode signal is the predominating signal making up (E_s) and the minimum trickle charge rate is determined by the value of "R" selected for the third electrode resistor. This low trickle rate is dictated by the battery requirements for various orbital conditions and may be selected to minimize heat generation and pressure build up due to excessive overcharge.

Notes:

1. No further documentation is available.
2. Questions concerning this invention may be directed to:

   Technology Utilization Officer
   Goddard Space Flight Center
   Greenbelt, Maryland 20771
   Reference: B68-10431

Patent status:

Inquiries about obtaining rights for the commercial use of this invention may be made to NASA, Code GP, Washington, D.C. 20546.

Source: John Paulkovitch and Floyd Ford
(GSC-10487)

NASA TECH BRIEF

NASA Tech Briefs are issued to summarize specific innovations derived from the U.S. space program, to encourage their commercial application. Copies are available to the public at 15 cents each from the Clearinghouse for Federal Scientific and Technical Information, Springfield, Virginia 22151.

High-Efficiency Step-Up Regulator

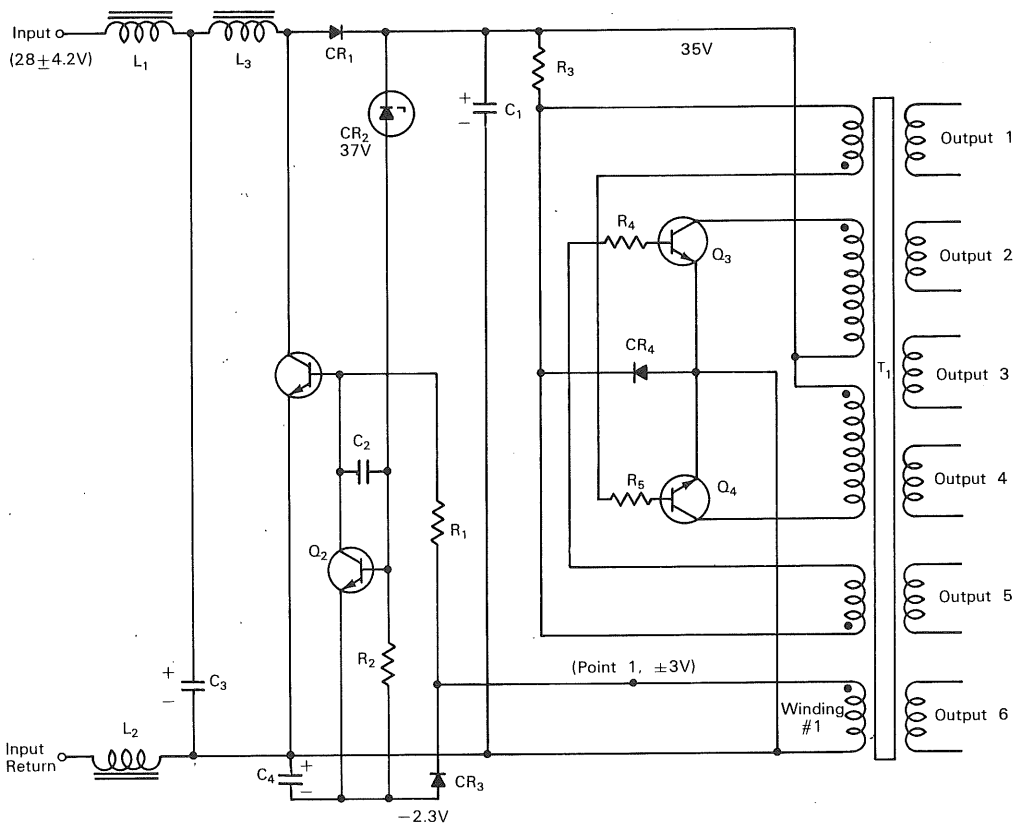

Power supplies for telemetry equipment must be of compact design and operate with high efficiency. An improved step-up regulator has been developed for a power supply that operates from an input of 28±4.2 volts (23.8 to 32.2 volts). The step-up regulator provides a constant output of 35 volts from the variable input and accomplishes the conversion with an efficiency of 97 percent. Choppers used alone as power supplies had excessive losses. Single-ended switching regulators, although operating with increased efficiency, cause large undesirable voltage spikes to appear on the output signal. The single-ended step-up regulator-chopper power supply (employing conventional chopper circuitry) combines the advantages of the chopper and switching regulator circuits.

A schematic of the power supply incorporating the step-up regulator is shown above. With 28±4.2

(continued overleaf)

This document was prepared under the sponsorship of the National Aeronautics and Space Administration. Neither the United States Government nor any person acting on behalf of the United States Government assumes any liability resulting from the use of the information contained in this document, or warrants that such use will be free from privately owned rights.

volts applied to the input, the chopper (Q_3–Q_4) will start oscillating. Winding 1 of transformer T_1 develops a 3 volt square wave, and since one side of this winding is grounded, the other side (point 1) goes from 3 volts positive to 3 volts negative at the frequency of the chopper. Assume point 1 has just gone positive and turned Q_1 on through R_1. Q_1 will now stay on until point 1 goes negative. While Q_1 is on, current is flowing through L_3 to ground, charging L_3. When Q_1 is turned off by point 1, the charge in L_3 must dissipate, and it does this by forward biasing CR_1. The current flows through CR_1 and charges capacitor C_1 slightly. The voltage on C_1 increases. Point 1 again goes positive and turns Q_1 on again and off again. This time, the potential on C_1 is raised a little higher and reaches 35 volts. CR_2 and Q_2 prevent the potential on C_1 from exceeding 35 volts. Assuming the 35 volt line is at a potential slightly above 35 volts, CR_2 will conduct and turn Q_2 on while Q_1 will be held off. When point 1 goes positive it will not yet be able to turn Q_1 on. There will be a slight delay until the 35 volt line drops just below 35 volts and CR_2 stops conducting. At this point, Q_1 will now come on, charging L_3. L_3 will in this case not get a whole charge, as the charging time was shortened. During periods of full load on the output of the supply, the charging time of L_3 will be long. During no-load conditions, the charging time will be greatly shortened.

The 35 volts will generally be held within plus or minus 0.25 volt. There are spikes on the 35 volts, and this voltage could not normally be used without further filtering. In this case the 35 volts are applied directly to the chopper. The inductance of the transformer in the chopper tends to eliminate the spikes from the preregulator and they are not seen on the outputs.

Capacitor C_2 is adjusted to a minimum value just large enough to cause the circuit to operate smoothly in PDM. The combination of L_1, L_2, and C_3 makes up a filter which minimizes the ripple fed back to the bus. At the instant Q_1 is turned on, there is no current, due to the inductance of L_3; therefore, Q_1 can be turned on slowly. At the instant Q_1 is turned off, there is a maximum of current in Q_1, and Q_1 needs to be turned off as rapidly as possible. Point 1 pulls the base of Q_1 to a minus 3 volt potential, turning Q_1 off in nanoseconds. By having the chopper operate on 35 volts instead of the customary 18 volts, the current in the primary of T_1 is halved, causing less heating and giving better efficiency. Multiple isolated outputs can be taken off of T_1. The minus 2.3 volt potential is obtained from point 1 as it goes 3 volts negative. The application of the 35 volts to the chopper can result in multiple isolated outputs (No. 1 to No. 6), and the voltage drop across the series regulators in the output circuits can be maintained at one volt plus or minus several millivolts. In presently used power supplies the drop is usually 1 to 8 volts.

Note:

No additional documentation is available. Questions may be directed to:

Technology Utilization Officer
Marshall Space Flight Center
Huntsville, Alabama 35812
Reference: B68-10432

Patent status:

Inquiries about obtaining rights for the commercial use of this invention may be made to NASA, Code GP, Washington, D.C. 20546.

Source: L. Ray Lister
of Sperry Rand Corporation
under contract to
Marshall Space Flight Center
(MFS-20049)

NASA TECH BRIEF

NASA Tech Briefs are issued to summarize specific innovations derived from the U.S. space program, to encourage their commercial application. Copies are available to the public at 15 cents each from the Clearinghouse for Federal Scientific and Technical Information, Springfield, Virginia 22151.

Selective Video Blanking Technique

An extremely adaptive technique permits selective blanking of specified photosensitive elemental outputs of a solid state imaging mosaic. This selective blanking capability is needed to elminate randomly spaced "bright spots" occurring in the resulting displayed image. These randomly spaced "bright spots" are caused by imperfections (shorted elements, etc.) occurring within typical large scale integrated semiconductor imaging arrays.

In recent years significant advances have been achieved in the area of solid state imaging using large scale integrated arrays of phototransistors (and diodes) to form the basic optoelectronic imaging plane. Imaging mosaics approximately 0.75 inches square and containing 51,200 phototransistors in a 200×256 matrix form have been developed and tested in a complete imaging system. The imaging quality of these mosiacs has been relatively good; however, this performance has been marred by the presence of bright spots (due to randomly spaced shorted elements) on the displayed image. The integrated circuit technology has not advanced to the stage where the yield (good phototransistors vs faulty phototransistor elements) is such that the number of faulty elements can be limited to an extremely small value which does not adversely affect the imaging performance.

The present technique for eliminating the adverse viewing effects caused by faulty photosensitive elements, consists of using a linear maximal (or nonmaximal) sequence generator to generate a pseudo-random pulse train to selectively blank the display monitor during specified mosaic interrogation times. The outputs of two sequence generators (or other combinations) can be used to minimize the length of the required shift register generator. The length of a maximal sequence is given by $L=2^n-1$ where n = number of stages in the shift-register generator. The coded blanking pulse sequence derived from the sequence generator or generators is then combined with the usual horizontal and vertical blanking pulses forming the composite imaging signal. Since the generated code sequence can be made to repeat with a period equal to the basic frame time of the imaging system, this approach to selectively blank out faulty sensing elements is particularly attractive. It is extremely flexible allowing for interchange of different mosaics with different "bright spot" patterns and has the advantage that it can be easily effected by setting of feedback switches. In addition, by the use of a single interconnect pattern (in which the desired sequence generator feedback is set) a unique sequence generator can be fabricated to match the faulty elements of different imaging mosaics if desired.

It is assumed that conventional scanning techniques are used in which the sensed image is divided into a series of "video" lines and later reconstructed to form the displayed image. Individual photo-transistor element selection used in forming each video line is accomplished using a row-column addressing technique to uniquely select each sensing element. Using this addressing scheme a row of photosensitive devices is energized while each column of devices is sequentially activated. Normal scan, interlace scan, or some pseudo-random scan as a reconstruct process can be used.

Notes:

1. In summary, the disclosed technique required considerably less equipment (gating selection, etc.) than would be required if each element output was individually inhibited, and this technique is extremely flexible requiring only the setting of feedback switches when mosiacs possessing different "bright spot" patterns are interchanged.

(continued overleaf)

This document was prepared under the sponsorship of the National Aeronautics and Space Administration. Neither the United States Government nor any person acting on behalf of the United States Government assumes any liability resulting from the use of the information contained in this document, or warrants that such use will be free from privately owned rights.

2. No further documentation for this invention is available. Questions may be directed to:

Technology Utilization Officer
Marshall Space Flight Center
Huntsville, Alabama 35812
Reference: B68-10434

Patent status:

Inquiries about obtaining rights for the commercial use of this invention may be made to NASA, Code GP, Washington, D.C. 20546.

Source: M. M. Saboe and R. C. Treude
of Westinghouse Electric Corporation
under contract to
Marshall Space Flight Center
(MFS-20013)

NASA TECH BRIEF

NASA Tech Briefs are issued to summarize specific innovations derived from the U.S. space program, to encourage their commercial application. Copies are available to the public at 15 cents each from the Clearinghouse for Federal Scientific and Technical Information, Springfield, Virginia 22151.

Compact Rotating Cup Anemometer

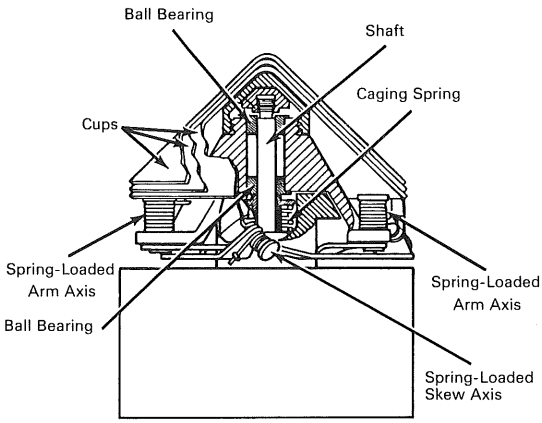

FIGURE 1

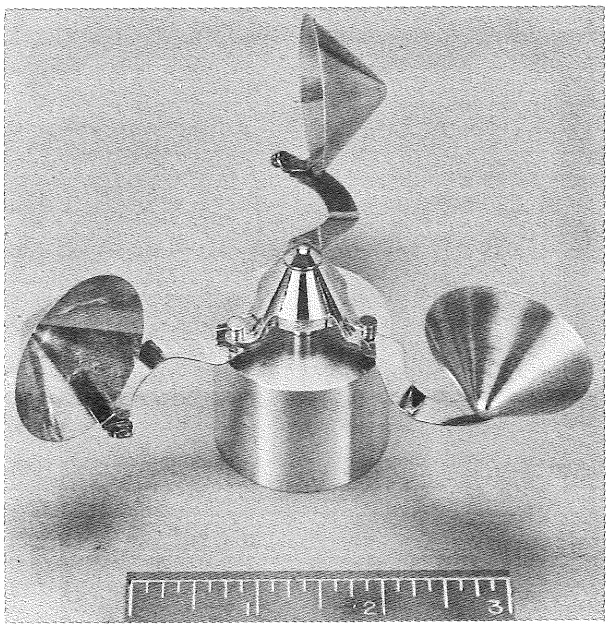

FIGURE 2

This compact, collapsible rotating cup anemometer has been designed for use in remote locations where portability and durability are factors in the choice of equipment. In the closed position, the three anemometer cups nest inside each other and lie over the hub assembly. In the open, or operational, configuration, the cups are positioned 120 degrees apart by the anemometer arms. The combination of interlacing arms and skewed hinge axes permits a large, sensitive anemometer to be stowed in the smallest possible cylindrical volume (1 1/2-inch diameter × 1-inch high). This lightweight instrument has a low wind-velocity threshold, which is comparable to that of conventional rotating cup anemometers; stores in less than one-tenth the volume of such devices; is capable of withstanding large mechanical shocks while in its stowed configuration; and has fast response to wind fluctuations.

A cross section of the folded anemometer is shown in Figure 1. Upon release, the cups rotate off the hub sequentially on three spring-loaded skew axes. At the same time, the three arms, which are stowed beneath the hub, rotate outwardly 180 degrees about another set of three spring-loaded (arm) axes until the anemometer assumes its operational configuration (Figure 2). In this configuration, the anemometer is free to rotate on its two miniature ball bearings. The rotational speed of the hub is detected photoelectrically from beneath the hub. A lid (not shown) maintains the anemometer in the closed configuration until the instrument must be put into service. A coil (caging) spring keeps the load off the bearings and cages

(continued overleaf)

This document was prepared under the sponsorship of the National Aeronautics and Space Administration. Neither the United States Government nor any person acting on behalf of the United States Government assumes any liability resulting from the use of the information contained in this document, or warrants that such use will be free from privately owned rights.

the mechanism. Upon command, a squib (not shown) is fired to release the cups and permit them to spring open. The caging spring then lifts the hub into position on the shaft, placing the anemometer in operational condition.

Note:

No additional documentation is available. Inquiries may be directed to:

Technology Utilization Officer
NASA Pasadena Office
4800 Oak Grove Drive
Pasadena, California 91103
Reference: B68-10436

Patent status:

No patent action is contemplated by NASA.

Source: J. B. Wellman
Jet Propulsion Laboratory
(NPO-10563)

NASA TECH BRIEF

NASA Tech Briefs are issued to summarize specific innovations derived from the U.S. space program, to encourage their commercial application. Copies are available to the public at 15 cents each from the Clearinghouse for Federal Scientific and Technical Information, Springfield, Virginia 22151.

Two-Way Digital Driver/Receiver Uses One Set of Lines

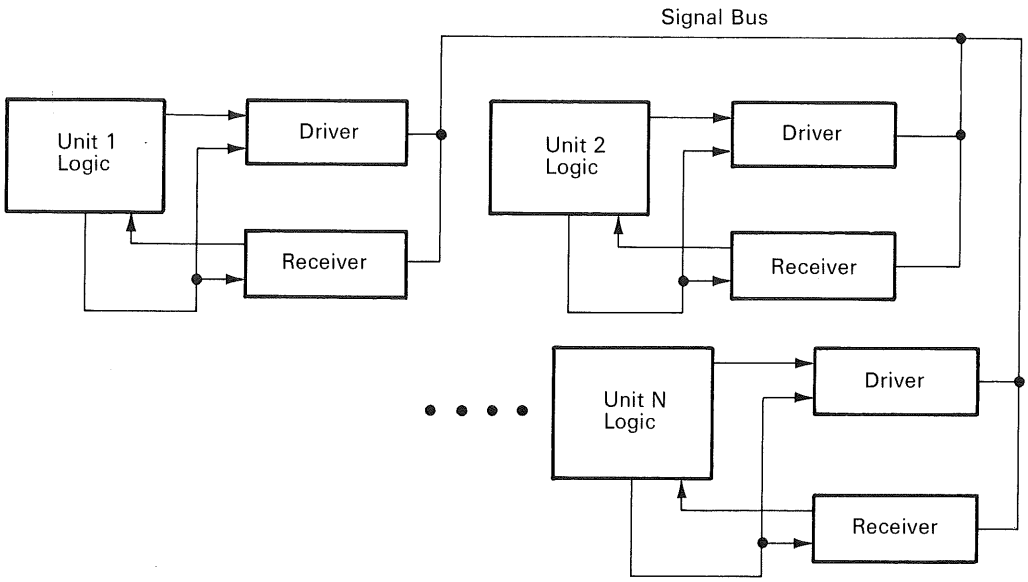

A two-way (bilateral) digital driver/receiver system using MOS circuits has been designed for a multiprocessing computer having several subsystems at relatively close locations. Parallel data transfer between several locations has required considerable duplication of equipment and multiple communication lines. The new system requires only a single set of communication lines between subsystems, thus achieving lower cost with increased reliability.

The basic configuration of the system is illustrated in the block diagram. Each logic unit is associated with a driver and receiver for each word bit. The logic unit sends request signals on individual lines to other logic units, which then control the appropriate drivers and receivers. The receivers incorporate MOS devices, which are of sufficiently high impedance, to permit the use of one signal bus.

Note:

Inquiries concerning this system may be directed to:
Technology Utilization Officer
Electronics Research Center
575 Technology Square
Cambridge, Massachusetts 02139
Reference: B68-10437

Patent status:

Inquiries about obtaining rights for the commercial use of this invention may be made to NASA, Code GP, Washington, D.C. 20546.

Source: G. J. Burnett and A. F. Pfeifer
of North American Rockwell Corporation
under contract to
Electronics Research Center
(ERC-10055)
Category 01

This document was prepared under the sponsorship of the National Aeronautics and Space Administration. Neither the United States Government nor any person acting on behalf of the United States Government assumes any liability resulting from the use of the information contained in this document, or warrants that such use will be free from privately owned rights.

NASA TECH BRIEF

NASA Tech Briefs are issued to summarize specific innovations derived from the U.S. space program, to encourage their commercial application. Copies are available to the public at 15 cents each from the Clearinghouse for Federal Scientific and Technical Information, Springfield, Virginia 22151.

Nosepiece Respiration Monitor

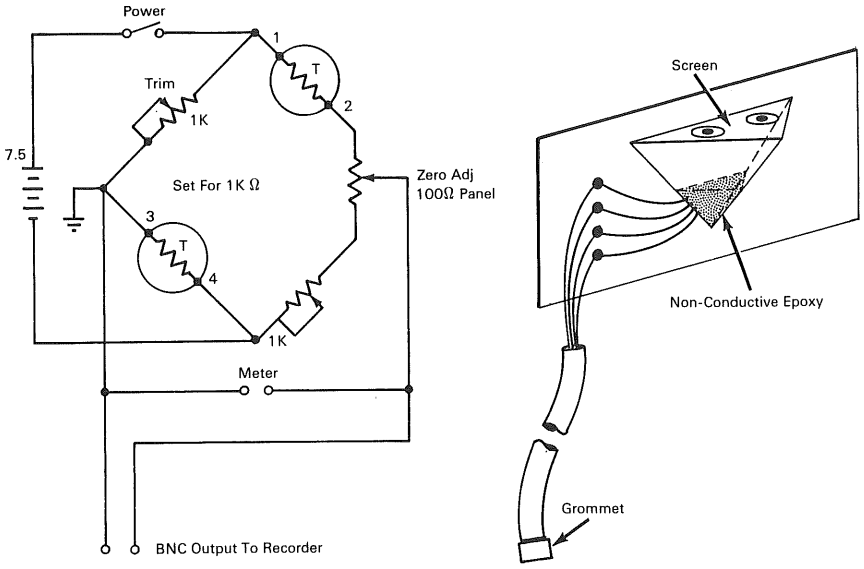

The problem:

In the monitoring of the respiration rate and amplitude of a patient, or research subject, it is desirable to produce a fast response in readout devices with a sensor that neither encumbers nor discomforts. Prior art devices have incorporated chestbands or headgear that are cumbersome and have been expensive in themselves and designed for use with expensive ancillary equipment.

The solution:

A nosepiece respiration monitor that is small, comfortable for the wearer, inexpensive, and that produces rapid response signals to most conventional high impedance medical signal conditioners.

How it's done:

This monitor uses inexpensive components and measures respiration in a manner that produces a large signal with minimum delay. The system incorporates the fast response of a heated thermistor to ambient temperature changes. The thermistor is heated to an impedance of approximately 1000 ohms, from which state it is cooled by patient breath inspiration and warmed by patient breath expiration as the sensor rests beneath the patient's nostrils. The lead wires travel above the patient's ears and form a grommet-contained harness about his head simply and neatly and comfortably. High amplitude response and zero baseline of the system are due to the dual thermistor

(continued overleaf)

This document was prepared under the sponsorship of the National Aeronautics and Space Administration. Neither the United States Government nor any person acting on behalf of the United States Government assumes any liability resulting from the use of the information contained in this document, or warrants that such use will be free from privately owned rights.

bridge arrangement shown in the sketch; the bridge yields approximately 22 mv/2°C (11 mv/2°C per thermistor). The nulled output may be fed to any high impedance dc amplifier, signal conditioner, oscilloscope or recording device.

Note:

Inquiries concerning this invention may be directed to:

Technology Utilization Officer
Electronics Research Center
575 Technology Square
Cambridge, Massachusetts 02139
Reference: B68-10438

Patent status:

Inquiries about obtaining rights for the commercial use of this invention may be made to NASA, Code GP, Washington, D.C. 20546.

Source: Lennart E. Long, Norman E. Rice, and Adelbert L. Lavery
(ERC-10136)

NASA TECH BRIEF

NASA Tech Briefs are issued to summarize specific innovations derived from the U.S. space program, to encourage their commercial application. Copies are available to the public at 15 cents each from the Clearinghouse for Federal Scientific and Technical Information, Springfield, Virginia 22151.

Short Circuit Protection for a Power Distribution System

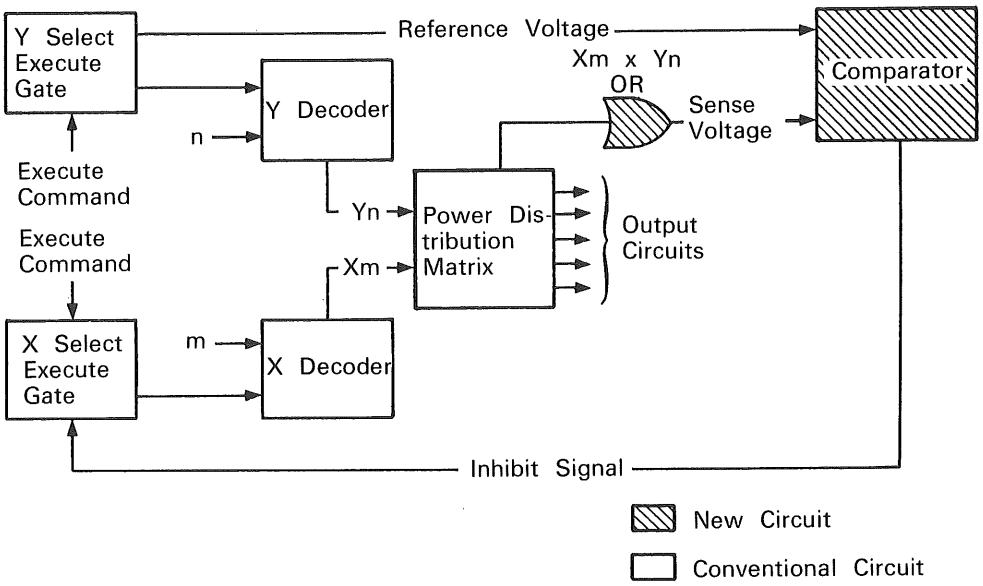

The problem:

To provide short circuit protection for a power distribution system where the selection of the driven load is accomplished by digital logic.

The solution:

Provide a sensing circuit that will detect when the output from a matrix is present and compare the output with a reference signal which determines when the matrix output should be present.

How it's done:

The illustration shows Power Distribution Matrix driving circuits that are selected and enabled by X and Y Decoders. An execute command activates X and Y Select Execute Gates which provide correct timing signals to X and Y Decoders. The Y Select Execute Gate also supplies a reference voltage to Comparator. The n and m decoder input lines define the matrix output to be selected. When an execute command is given, the X and Y Decoder outputs are routed to the Power Distribution Matrix. The Yn and Xm combination selects and activates one of the output drivers in the matrix. Each output driver signal is applied to an OR Gate and the resulting sense voltage is compared in magnitude with the reference voltage. If the sense voltage is more positive than the reference voltage (the normal situation), there is no Comparator output. If there is a short circuit (the abnormal situation) on one of the outputs, the sense voltage will be more negative than the reference voltage. The Comparator will generate an inhibit signal that will deactivate the X Select Execute Gate. This overload protection circuit generates the inhibit control, therefore, to disable the output driver of the Power Distribution Matrix without affecting the execute command. The importance of

(continued overleaf)

This document was prepared under the sponsorship of the National Aeronautics and Space Administration. Neither the United States Government nor any person acting on behalf of the United States Government assumes any liability resulting from the use of the information contained in this document, or warrants that such use will be free from privately owned rights.

this point is that as long as the execute command is present, the output is inhibited because of the presence of the resulting reference voltage without the presence of a more positive sense voltage.

When the execute command is removed, the short-protection circuitry is automatically reset and the previously shorted output can be reselected. This reset handles those situations where the short is transient in nature and proper operation is attainable after the short is removed.

Notes:

1. A disadvantage of this system, which can only be evaluated as a system attribute, is that the output will not return to normal operation until the execute command signal is removed and reapplied. This means that if the overload is removed while the command is present, normal operation will continue to be inhibited. Where this feature is objectionable, additional logic control can be instrumented to feed the inhibit signal back to the execute command generation circuitry. When this occurs, the execute command can be reinitiated, either selectively or automatically, to attempt to activate the output again. The "hunting" effect on the system would determine the incorporation of this feedback feature.
2. No further documentation is available for this innovation.
3. Technical questions concerning this innovation may be directed to:

   Technology Utilization Officer
   Marshall Space Flight Center
   Huntsville, Alabama 35812
   Reference: B68-10443

Patent status:

No patent action is contemplated by NASA.

Source: J. R. Owen, III
of International Business Machines
under contract to
Marshall Space Flight Center
(MFS-14993)

NASA TECH BRIEF

NASA Tech Briefs are issued to summarize specific innovations derived from the U.S. space program, to encourage their commercial application. Copies are available to the public at 15 cents each from the Clearinghouse for Federal Scientific and Technical Information, Springfield, Virginia 22151.

Cooling of 2KW H_2–O_2 Fuel Cell

An extensive research and development program has been carried out to devise an improved method of removing waste heat of reaction from a developmental 2KW H_2–O_2 fuel cell. The objectives of this effort were to eliminate an intermediate heat exchanger, increase system reliability, improve thermal performance (to reduce radiator requirements and enable the fuel system to accept a greater range of coolant temperatures), and to reduce system cost and weight.

In one method which was developed, waste heat of reaction is removed from the fuel cell by conduction through the cell plates, via a suitable thermally conductive electrical insulator, to channeled cold plates. Coolant is passed through the cold plates on two sides of the cell stack, and heat is removed from the stack by conduction through the cell plate edges and the cold plates. The flow channels are of rectangular cross section to take advantage of the large heat transfer coefficients associated with high geometric aspect ratios. The cold plates are constructed of aluminum, and all welding is performed by the electron beam process. The insulating medium is a 0.007-inch-thick layer of a silicone polymer loaded with magnesium oxide to improve thermal conductivity. This insulation is a resilient material capable of compensating for small irregularities in the surface formed by the cell plate edges. Fuel cell temperature is controlled by varying the flow rate of the coolant through the cold plates. The basic design of the cooling system can be adapted to allow various flow patterns and manifolding arrangements without altering the fuel cell stack or other components.

A water cavity, heat pipe cooling method, which was investigated, requires further development. This method would have potential application to all fuel cell systems using the static moisture removal method of collecting fuel cell product water. At a current density of 200 amperes per square foot, approximately 33 percent of fuel cell waste heat of reaction is removed as latent heat of vaporization at the water removal matrix and is rejected to the coolant at the water condenser. Water, supplied from the recovery subsystem at approximately 60 psi, is injected either into the oxygen or hydrogen cavity; the water is then removed as vapor with the product water. Fuel cell temperature is controlled by the frequency, duration, and rate of water injection. Condensation of the vapor and collection of the condensate are accomplished by a condenser using a water–glycol coolant loop and recovery subsystem of adequate capacity.

Another method of cooling fuel cells, primarily under reduced gravity, has been in a conceptual stage of development. In this method, the coolant fluid would be supplied to the distribution manifold under a slight pressure and conveyed to the heat source by capillary wicks. The resultant vapor develops a pressure head, which would be converted to a velocity head in the injector nozzle of an impulse pump. A pressure drop would thus appear at the vapor orifice. Condensate from the condenser would be carried into the vapor stream and accelerated in an accelerator barrel. The velocity head is partially converted to a pressure head, which is greater than the initial vapor pressure. This pressure rise, plus the pressure-gradient increase due to the capillary wicking, would force the liquid to flow into the fuel cell. Operation of the impulse pump is similar to that of a steam–water injector used on a boiler.

Note:

Documentation is available from:

Clearinghouse for Federal Scientific
and Technical Information
Springfield, Virginia 22151
Price $3.00
Reference: B68-10544

(continued overleaf)

This document was prepared under the sponsorship of the National Aeronautics and Space Administration. Neither the United States Government nor any person acting on behalf of the United States Government assumes any liability resulting from the use of the information contained in this document, or warrants that such use will be free from privately owned rights.

Patent status:

Inquiries about obtaining rights for the commercial use of this invention may be made to NASA, Code GP, Washington, D.C. 20546.

Source: J. R. Hurley, H. K. Bjorkman, K. N. Allan, and T. E. Elbert of Allis-Chalmers under contract to Marshall Space Flight Center (MFS-13737, 13740, & 13749)

NASA TECH BRIEF

NASA Tech Briefs are issued to summarize specific innovations derived from the U.S. space program, to encourage their commercial application. Copies are available to the public at 15 cents each from the Clearinghouse for Federal Scientific and Technical Information, Springfield, Virginia 22151.

A 35 GHz Solid State Transmitter/Driver

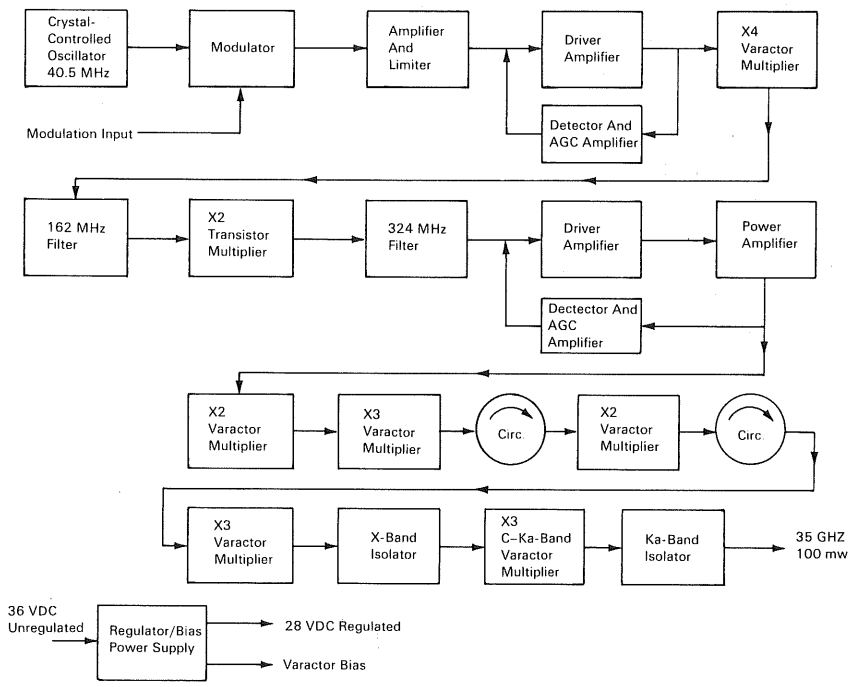

A solid state transmitter/driver (multiplier) signal source has been designed and fabricated to produce a stable crystal-controlled CW power output of 100 mw at 35 GHz. The circuit requires 60 watts of dc input power and exhibits a signal/noise ratio of at least 30 dB below the carrier at 35 GHz. The signal source is contained in a package measuring 8×10×5.5 inches and weighing approximately 18 pounds.

It includes a series of semiconductor amplifiers and multipliers which produce a stable crystal-controlled drive power of approximately 18 watts at 325 MHz. This drive is then applied to a chain of varactor multipliers to a frequency of 35 GHz. The total frequency multiplication factor is 864. Printed-circuit, coaxial, stripline, and waveguide techniques are used for the various amplifiers and multipliers. A phase-modulation exciter is included in the source for telemetry signals.

As shown in the block diagram, the multiplier chain starts with a crystal-controlled oscillator operating at 40.5 MHz. A bandpass filter of 0.02% bandwidth is provided within the oscillator module to limit the noise bandwidth. Following the oscillator, a phase modulator is incorporated to allow frequency modulation of the output. The frequency response of the modulator is 400 Hz to 100 kHz, and it will produce

(continued overleaf)

This document was prepared under the sponsorship of the National Aeronautics and Space Administration. Neither the United States Government nor any person acting on behalf of the United States Government assumes any liability resulting from the use of the information contained in this document, or warrants that such use will be free from privately owned rights.

a maximum deviation of ±215 kHz from 35 GHz output frequency. A limiter-amplifier follows the modulator to remove any amplitude modulation produced in the modulator. An AGC driver amplifier is then used to drive an X4 varactor multiplier to produce a stable 20 mw output at 162 MHz. An m-derived bandpass filter is then employed to suppress the third and fifth harmonics of 40.5 MHz created by the X4 multiplier. Adequate suppression of the spurious harmonics is especially important in the lower end of the chain, since amplification of these (spurious enhancement) is a function of the square of the multiplication factor of the multiplier chain. A transistor doubler is employed to multiply the frequency to 324 MHz and is followed by a 2-section bandpass filter for additional harmonic suppression. The resulting 324 MHz, 100 mw signal is then amplified to 18 watts by a linear driver and power amplifier string. An AGC loop around this amplifier insures a constant drive to the following multiplier regardless of temperature variations. Following the power amplifier, two lumped element varactor multipliers, a doubler and a tripler, are used to multiply the frequency to 1.95 GHz. A stripline circulator is used to isolate these multipliers from the following stripline S-C band doubler/circulator module. The output of this module is 3.9 GHz at 1.7 watts. A transition to Ku band waveguide is accomplished in the following C-X band tripler. The output of this unit is over 500 mw at 11.7 GHz. A waveguide isolator is used between this multiplier and the final multiplier in the chain. This final multiplication from 11.7 GHz to 35 GHz is accomplished by a cavity type tripler which provides 125 mw output power. With the inclusion of a final waveguide isolator and the output waveguide, a power output of 100 mw at 35 GHz is available at the output of the unit. Under normal operating conditions, the source will consume 60 watts of primary power from an unregulated 36 VDC supply in the booster. A regulator circuit has been incorporated in the unit to provide the stable 28 VDC power source required for operation of the multiplier chain.

Note:

Documentation is available from:

Clearinghouse for Federal Scientific
and Technical Information
Springfield, Virginia 22151
Price $3.00
Reference: B68-10545

Patent status:

No patent action is contemplated by NASA.

Source: X. A. De Angelis
of Sylvania Electric Products Inc.
under contract to
Marshall Space Flight Center
(MFS-20152)

NASA TECH BRIEF

NASA Tech Briefs are issued to summarize specific innovations derived from the U.S. space program, to encourage their commercial application. Copies are available to the public at 15 cents each from the Clearinghouse for Federal Scientific and Technical Information, Springfield, Virginia 22151.

Electrolytic Silver Ion Cell Sterilizes Water Supply

An electrolytic water sterilizer has been developed for control of microbial contamination in manned spacecrafts. Individual sterilizer cells are self-contained and require no external power or control. The compactness and light weight of the units (measuring 2.5 inches in diameter × 4 inches in length and weighing 0.6 pound) and absence of external mechanisms make it possible to integrate such sterilizers with the potable water supply or waste water system in confined areas.

The sterilizer generates silver ions in concentrations of 50 ppb (parts per billion) to 100 ppb in the water flow system, the desired concentration being adjusted as a function of the average water flow rate. After installation of a unit, no maintenance is required. Operation of the unit is self-limiting, precluding damage to the system if water ceases to flow. A shunt is provided for on-off functions and monitoring of current flow. Unit life expectancy is 9000 hours without a change of the power supply batteries.

Laboratory tests of the sterilizer under simulated conditions have demonstrated essentially complete kill within 8 hours of *Staphylococcus aureus* and *Escherichia coli* bacteria present in initial concentrations of approximately 5×10^5 organisms per milliliter.

Silver ions in concentrations of 50 to 100 ppb, which are nontoxic when ingested, have been recognized for many years as an effective bactericide. Since a sterilization unit for spacecraft water systems must operate in zero gravity, consume little electrical power, and require no heat, elaborate controls, or material replacement, the use of silver ions in a spacecraft sterilizer has many advantages over other possible sterilization methods. Many of the advantages of the new sterilizer, including the advantage that the silver ions do not impart an unpleasant taste to the water, can be realized also in nonspace applications. This water sterilizer should also be of value to biological laboratories, pharmaceutical companies, and underwater craft.

Note:

Design details and test results are contained in Report NASA-CR-65738 which is available from:

Clearinghouse for Federal Scientific
and Technical Information
Springfield, Virginia 22151
Price $3.00
Reference: B68-10555

Patent status:

This invention is owned by NASA, and a patent application has been filed. Royalty-free, nonexclusive licenses for its commercial use will be granted by NASA. Inquiries concerning license rights should be made to NASA, Code GP, Washington, D.C. 20546.

Source: J.B. Gillerman and C.F. Albright
of The Garrett Corporation (AiResearch Mfg. Div.)
under contract to
Manned Spacecraft Center
(MSC-11827)

Category 01

This document was prepared under the sponsorship of the National Aeronautics and Space Administration. Neither the United States Government nor any person acting on behalf of the United States Government assumes any liability resulting from the use of the information contained in this document, or warrants that such use will be free from privately owned rights.

NASA TECH BRIEF

NASA Tech Briefs are issued to summarize specific innovations derived from the U.S. space program, to encourage their commercial application. Copies are available to the public at 15 cents each from the Clearinghouse for Federal Scientific and Technical Information, Springfield, Virginia 22151.

Amplifier Improvement Circuit

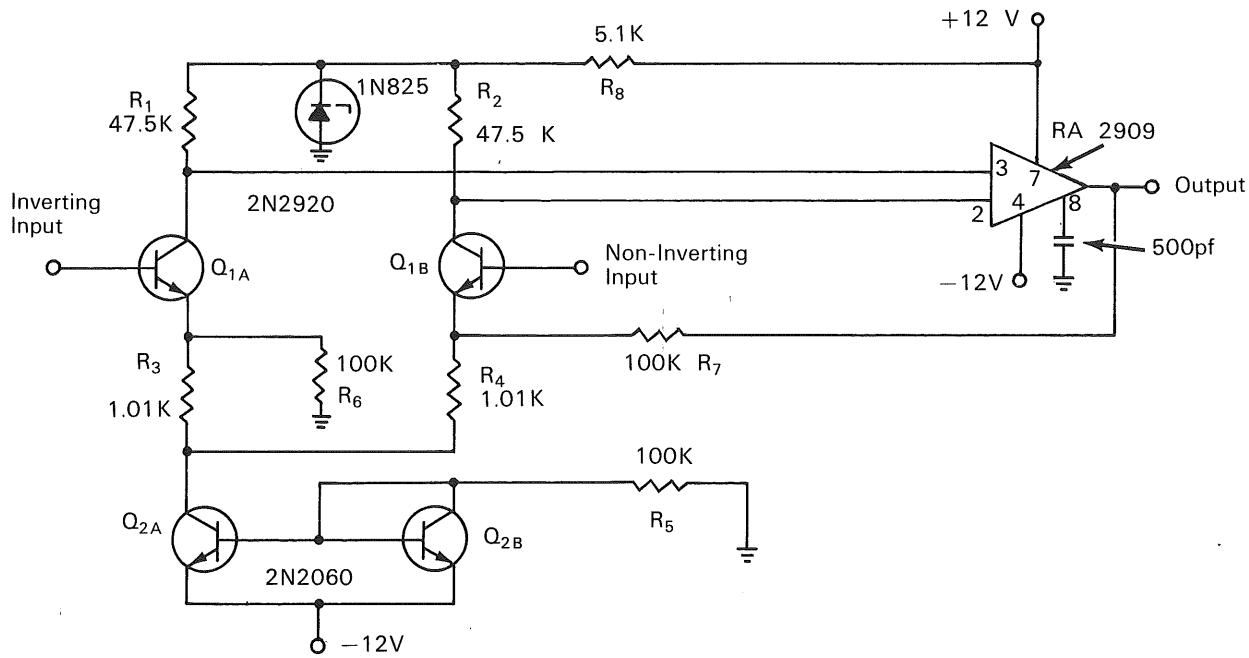

A stable input stage was designed for use with an integrated circuit operational amplifier to provide improved performance as an instrumentation-type amplifier. It is frequently necessary to process differential low level signals having an undesirable common mode component. If the source impedance is high, the amplifier must have a high input impedance. This is difficult if not impossible to obtain without degrading the performance in other respects using only operational amplifiers.

The circuit shown provides all the desired features; namely, high input impedance, stable gain, good common mode rejection, very low drift, and low output impedance. In addition, the capacitor provides bandwidth limiting without affecting the common mode rejection of the overall amplifier. Operation of the input stage at low collector currents combined with the feasibility of transistor selection makes possible a lower noise figure than any currently available monolithic amplifiers. Note that no dc biasing is provided to the inputs, therefore, an external path to ground must be provided by the source.

The design shown is for an amplifier with a gain of 100. The gain can be easily changed by changing the resistance ratio between R7 and R4 and R6 and R3. Because the first stage adds gain, the closed loop gain is very stable with both time and temperature. One caution must be observed. Because of the additional gain and phase shift introduced by the added stage, this circuit will oscillate or latch up if used with many of the older non-self-compensated operational amplifiers. It works very well with most sec-

(continued overleaf)

This document was prepared under the sponsorship of the National Aeronautics and Space Administration. Neither the United States Government nor any person acting on behalf of the United States Government assumes any liability resulting from the use of the information contained in this document, or warrants that such use will be free from privately owned rights.

ond generation operational amplifiers, although many do not have an appropriate terminal available for bandwidth limiting.

Notes:

1. No additional documentation for this innovation is available.
2. Technical questions concerning this innovation may be directed to:

   Technology Utilization Officer
   Lewis Research Center
   21000 Brookpark Road
   Cleveland, Ohio 44135
   Reference: B68-10456

Patent status:

No patent action is contemplated by NASA.

Source: John Sturman
(LEW-10712)

NASA TECH BRIEF

NASA Tech Briefs are issued to summarize specific innovations derived from the U.S. space program, to encourage their commercial application. Copies are available to the public at 15 cents each from the Clearinghouse for Federal Scientific and Technical Information, Springfield, Virginia 22151.

Combination Probe for Airflow Measurements

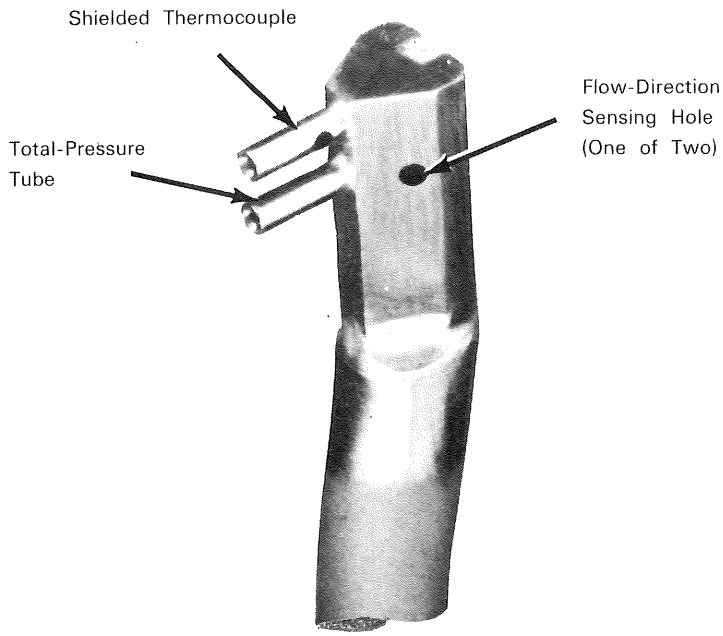

The problem:

One of the problems in experimental fluid mechanics is to provide small sensors to measure various parameters in the flow field. The use of individual immersion sensors, to measure a particular point in the stream, necessitates holding or repeating the flow condition for as many kinds of individual sensors as is necessary. Attempts to circumvent this by combining several types of sensors on one support usually result in too large an overall size and the compromising of performance of the individual sensors.

The solution:

A small combination probe has been designed and tested whose primary intended application is on compressor and turbine research. The probe combines a high-recovery shielded thermocouple for sensing total temperature, a total pressure sensing tube, and a flow direction sensing wedge having a 60° included angle. Also, in addition to these measurements, limited application may be made in using a flow direction sensing hole indication to obtain stream static pressure.

How it's done:

By unique design and arrangement, the sensors have combined in one head to sample the flow in a small area without degrading the performance of the single elements. In this manner, the parameters can be measured simultaneously and in close proximity in the flow field. The probe head can pass through a 0.6 cm hole.

(continued overleaf)

This document was prepared under the sponsorship of the National Aeronautics and Space Administration. Neither the United States Government nor any person acting on behalf of the United States Government assumes any liability resulting from the use of the information contained in this document, or warrants that such use will be free from privately owned rights.

Notes:

1. Although the probe was developed primarily for use in rotating machinery research, it is applicable wherever restrictions on size and requirements for multiple measurements exist.
2. Documentation for the invention is available from:
   Clearinghouse for Federal Scientific
   and Technical Information
   Springfield, Virginia 22151
   Price $3.00
   Reference: B68-10558

Technical questions may also be directed to:
Technology Utilization Officer
Lewis Research Center
21000 Brookpark Road
Cleveland, Ohio 44135
Reference: B68-10558

Patent status:

Inquiries about obtaining rights for the commercial use of this invention may be made to NASA, Code GP, Washington, D.C. 20546.

Source: Lloyd N. Krause, George E. Glawe, and Thomas J. Dudzinski
(LEW-10281)

NASA TECH BRIEF

NASA Tech Briefs are issued to summarize specific innovations derived from the U.S. space program, to encourage their commercial application. Copies are available to the public at 15 cents each from the Clearinghouse for Federal Scientific and Technical Information, Springfield, Virginia 22151.

Reliable Method for Testing Gross Leaks in Semiconductor Component Packages

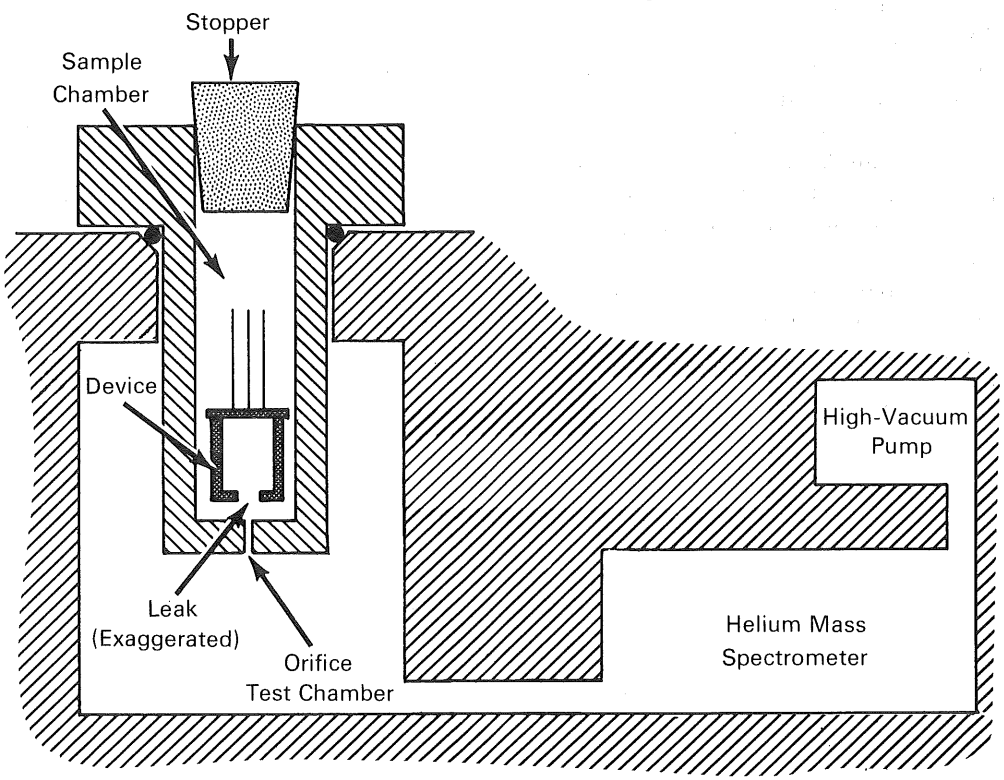

Various semiconductor components such as integrated circuit modules or cans are adversely affected by the presence of a few parts per million of water. The components must therefore be hermetically sealed to prevent the entrance of water vapor. Leak tests, used to determine seal effectiveness, are generally divided into two categories: gross-leak tests (for leak rates greater than 10^{-5} std cc/sec) and fine-leak tests (for leak rates less than 10^{-5} std cc/sec). Helium leak tests (involving a mass spectrometer), which have been commonly used for leak detection, are limited to leak rates of less than 10^{-5} std cc/sec. The conventional helium leak tests cannot, therefore, be reliably used for detecting gross leaks in integrated circuit cans. Bubble tests, which are often used for detecting gross leaks, are also unreliable.

A simple, reliable, inexpensive method for gross-leak testing has been devised, based upon the conventional fine-leak technique. The sensitivity ranges from the detection of very large leaks down to leaks of

(continued overleaf)

This document was prepared under the sponsorship of the National Aeronautics and Space Administration. Neither the United States Government nor any person acting on behalf of the United States Government assumes any liability resulting from the use of the information contained in this document, or warrants that such use will be free from privately owned rights.

10^{-7} cc helium per sec. The tester includes a sample chamber mounted at the mouth of and connected by a small orifice to the test chamber, a helium mass spectrometer and a high-vacuum pump shown in the diagram. The test chamber is continuously evacuated, eliminating the necessity of vacuum cycling for each test, greatly simplifying the testing procedure.

In summary, the test consists of the following steps:

1. The devices, housed in open bottles, are pressurized with helium at 60 psig for at least 2 hours.
2. Immediately after pressurization, the bottles containing the devices are closed.
3. A particular device to be tested is removed from its bottle and placed into the sample chamber, which is then immediately closed with the rubber stopper. A high-vacuum pump continuously evacuates the test chamber through the helium mass spectrometer. The orifice at the bottom of the sample chamber limits gas flow so that the gas pressure within the test chamber remains at approximately 0.01 micron, even though the pressure within the sample chamber is atmospheric. Helium gas will diffuse out of the device into the sample chamber. The resulting helium and air mixture will flow through the orifice into the mass spectrometer, where the helium leak rate is measured.
4. After gross leak testing is completed, the device is removed from the sample chamber, which is then purged with nitrogen gas in readiness for the next gross-leak test.

Fine-leak testing of the device should be done after gross-leak testing. This may be accomplished by merely inserting the device into the test chamber (without using a sample chamber). The mouth of the test chamber is then sealed with a cap and the helium leak test is conducted in the conventional manner. It is not necessary to repressurize the device with helium. Also, only those devices that do not show gross leaks should be subjected to the fine-leak test. Because of the testing range of the gross-leak test, this test might be the *only* one required for many applications.

Notes:

Details may be obtained from:

Clearinghouse for Federal Scientific
and Technical Information
Springfield, Virginia 22151
Price $3.00
Reference: B68-10562

Patent status:

Inquiries about obtaining rights for the commercial use of this invention may be made to NASA, Code GP, Washington, D.C. 20546.

Source: T. L. Altshuler
(ERC-10150)
Category 01

NASA TECH BRIEF

NASA Tech Briefs are issued to summarize specific innovations derived from the U.S. space program, to encourage their commercial application. Copies are available to the public at 15 cents each from the Clearinghouse for Federal Scientific and Technical Information, Springfield, Virginia 22151.

Active RC Filter Permits Easy Trade-Off of Amplifier Gain and Sensitivity to Gain

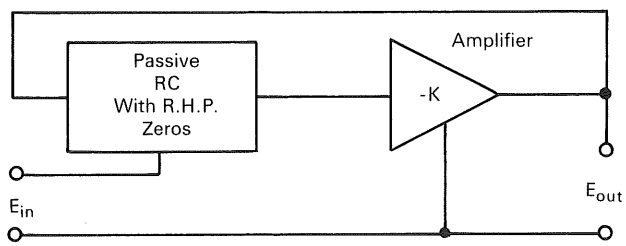

The problem:

Active RC filter amplifiers are preferred to RLC filters in applications where the presence of inductors is undesirable for reasons of size, weight, cost, or magnetic field considerations. They are required if the circuit is to be integrated monolithically. However, the performance of active RC filters tends to be sensitive to component values and particularly to the gain of the amplifier. Designs which reduce this sensitivity to acceptable values often require amplifiers of very high gain or operational amplifiers (which may prohibit applications at intermediate radio frequencies).

The solution:

A passive RC network with zeros of transmission in the right half of the complex frequency plane used in the feedback loop of a simple negative-gain amplifier. These "phantom zeros" do not appear in the overall system transfer function, but their proper positioning provides any desired trade-off between amplifier gain and Q sensitivity to amplifier gain.

How it's done:

The desired rational transfer function can always be realized by a cascade of filter amplifiers each of which realizes, at most, two poles. Here we consider a single bandpass stage having two complex poles. For this application, a twin-tee RC network or a distributed RC notch network may be used to generate the phantom zeros. Position of the phantom zeros can be controlled by using the results of closed-form analysis of the twin-tee or of a computer analysis that has been carried out for the uniformly distributed notch network.

The amplifier can be a simple phase-inverting design permitting reliable operation in the radio frequency range. For example, when a Q of 50 is desired, a tapered (10:1) twin-tee passive structure requires an amplifier gain of only -10.3 if the phantom zeros are positioned at $+0.1 \pm i\ 0.995$ (normalized values) a position which reduces the Q sensitivity to amplifier gain, S_K^Q, to 10.3 or 0.206 Q (compared with about 2Q for some well known circuits). A model of this design with the center frequency scaled up to 4.78 MHz has been successfully tested in the laboratory.

A design chart is given in reference 1 for the version using a uniformly distributed notch network and several models have been successfully tested. However, the uniform line increases the gain required (over the tapered twin-tee) for the same Q and S_K^Q.

For low frequency applications where operational amplifiers can be used, the state variable method described in reference 2 can be used, and is capable of

(continued overleaf)

This document was prepared under the sponsorship of the National Aeronautics and Space Administration. Neither the United States Government nor any person acting on behalf of the United States Government assumes any liability resulting from the use of the information contained in this document, or warrants that such use will be free from privately owned rights.

exceptionally low sensitivity to both amplifier gain and components.

References:

1. "An Integrable IF Amplifier of High Stability," by W. J. Kerwin and Charles V. Shaffer presented at Eleventh Midwest Symposium on Circuit Theory, University of Notre Dame, Notre Dame, Indiana, May 13–14, 1968.
2. "State-Variable Synthesis for Insensitive Integrated Circuit Transfer Functions" by William J. Kerwin, Lawrence P. Huelsman, and Robert W. Newcomb printed in *IEE Journal of Solid-State Circuits,* Vol. SC-2, No. 3, September 1967.

Note:

Documentation for this invention, consisting of the two reference papers, is available from:

Clearinghouse for Federal Scientific
and Technical Information
Springfield, Virginia 22151
Price $3.00
Reference: B68-10539

Patent status:

Inquiries about obtaining rights for the commercial use of this invention may be made to NASA, Code GP, Washington, D.C. 20546.

Source: William J. Kerwin
and Charles V. Shaffer
Ames Research Center
(ARC-10042)

NASA TECH BRIEF

NASA Tech Briefs are issued to summarize specific innovations derived from the U.S. space program, to encourage their commercial application. Copies are available to the public at 15 cents each from the Clearinghouse for Federal Scientific and Technical Information, Springfield, Virginia 22151.

High Dielectric Thick Films for Screened Circuit Capacitors

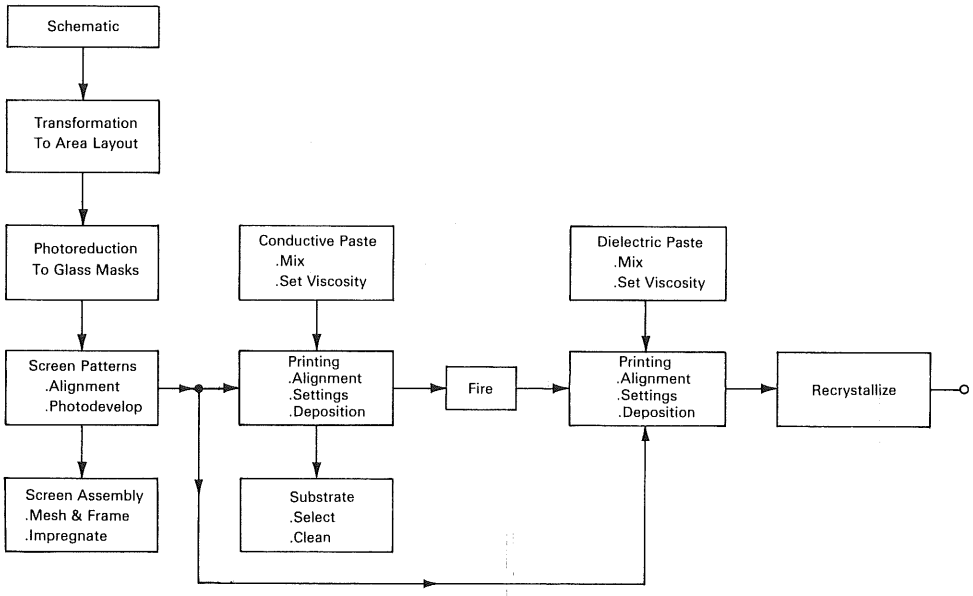

In the past, screened hybrid microcircuits have used low dielectric thick films for capacitors. These consist of ceramic dielectric particles mechanically suspended in a lead monosilicate glass matrix. Because of the small volume of high dielectric particles (35% by weight) which can be packed into the low dielectric glass, the dielectric constants of such thick films are less than 100. The mechanical suspension results in low-density structures featuring high-dissipation factors.

Techniques and materials have recently been developed to obtain high dielectric films (K of 300 to 800). For these new materials, high dielectric barium titanate particles are mixed in a barium titanate glass. The final dielectric material thus consists of barium titanate particles bound by smaller grained barium titanate which has recrystallized out of the glass, giving a total barium titanate content of 90 to 95 percent. The films are deposited and recrystallized in place on alumina substrates for integration into a complete circuit.

Each thick film composition consists of barium titanate glass and barium titanate microcrystals. Compositional ratios for the two mixtures, A and B, are shown in Table 1, overleaf. Table 2 lists the constituents of the barium titanate glass.

Reagent grade chemicals are dry blended for 1 hour and ball milled in distilled water. The water is removed by filtering and the material is dried under an infrared lamp. After calcining in air at 1000°C for 1 hour and comminuting, the composition is melted at 1450° to 1600°C and quenched to a glass frit in distilled water. The frit is milled and sifted through a 325-mesh screen.

(continued overleaf)

This document was prepared under the sponsorship of the National Aeronautics and Space Administration. Neither the United States Government nor any person acting on behalf of the United States Government assumes any liability resulting from the use of the information contained in this document, or warrants that such use will be free from privately owned rights.

Table I
Composition of Dielectric Thick Films

Component	Mixture A (wt.%)	Mixture B (wt.%)
Barium Titanate Glass	20	80
Barium Titanate Microcrystals	80	20

Table II
Composition of Barium Titanate Glass

Constituent	Amount (wt. %)
BaO	54.7
BaF_2	3.2
TiO_2	24.0
Al_2O_3	7.9
GeO_2	2.0
SiO_2	8.2

Barium titanate is then blended with the frit and the total composition suspended in a binder and lubricant for screening. The binder-lubricant formulation is 200 ml of butyl cellosolve acetate to 21.5 grams of Ethoxyl T-10.

The block diagram shows the integration of the dielectric paste into a thick film capacitor. Bottom platinum electrodes are screened on alumina substrates and fired at 1260°C. Dielectric films with a surface area of 0.06 cm^2 are deposited on the electrodes. A 165- or 200-mesh screen gives satisfactory depositions. The films are outgassed by drying in a vacuum and then heating at 100°C.

The films are recrystallized according to the following schedule: soaked at 425°C for 10 minutes to complete burnout of the binder; heated to 1225° to 1275°C in 5 to 10 minutes for recrystallization; soaked at temperature for 5 to 15 minutes, and cooled with furnace shutdown. To evaluate the capacitors, air-dried silver is deposited as the top electrode.

Notes:

1. At room temperature and 10 kHz, the dielectric constants of materials A and B, when screened as thick films, are, respectively, 615 ± 25 and 325 ± 10. These represent capacitance densities of 12,000 pf/cm^2 (77,400 pf/in^2) and 3850 pf/cm^2 (24,800 pf/in^2). Their temperature coefficients are positive to 140°C, the dielectric Curie temperature.
2. Documentation for the invention is available from:
   Clearinghouse for Federal Scientific
   and Technical Information
   Springfield, Virginia 22151
   Price $3.00
   Reference: B68-10542

Patent status:

Inquiries about obtaining rights for the commercial use of this invention may be made to NASA, Code GP, Washington, D.C. 20546.

Source: Donald R. Ulrich
(LAR-10294)

NASA TECH BRIEF

NASA Tech Briefs are issued to summarize specific innovations derived from the U.S. space program, to encourage their commercial application. Copies are available to the public at 15 cents each from the Clearinghouse for Federal Scientific and Technical Information, Springfield, Virginia 22151.

Temperature Controlled Strain Gaged Extensometer

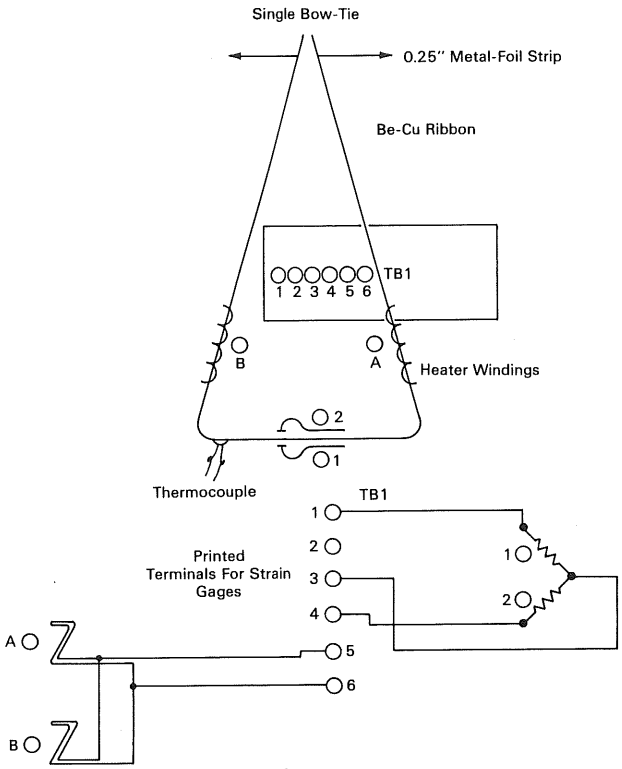

Figure 1

The problem:

Measuring longitudinal and girth deflections of pressure vessels in excess of one percent strain during pressurization and depressurization with cryogenic fluids at cryogenic temperatures. Conventional strain gages are not satisfactory due to gage variations and adhesive limitations. Adhesives available for use at cryogenic temperatures are not recommended for strains greater than one percent.

The solution:

A temperature controlled strain-gaged extensometer. This spring type strain-gaged extensometer is made in a "Bow Tie" configuration. A half "Bow Tie" (Figure 1) is used to measure changes from 0.060" to 1.0" and a full "Bow Tie" (Figure 2) is used to measure changes from 0.50" to 3.0".

How it's done:

This device consists of beryllium–copper strips bent into a configuration that provides two cantilever beams. The strain gages are cemented on the short straight section of the Bow Tie exactly opposite each other. See Figure 1. Metal-foil strip, approximately 0.25-inch wide, was used to link the beam ends to the pressure vessel. For girth (hoop) measurements, the

(continued overleaf)

This document was prepared under the sponsorship of the National Aeronautics and Space Administration. Neither the United States Government nor any person acting on behalf of the United States Government assumes any liability resulting from the use of the information contained in this document, or warrants that such use will be free from privately owned rights.

Double Bow-Tie

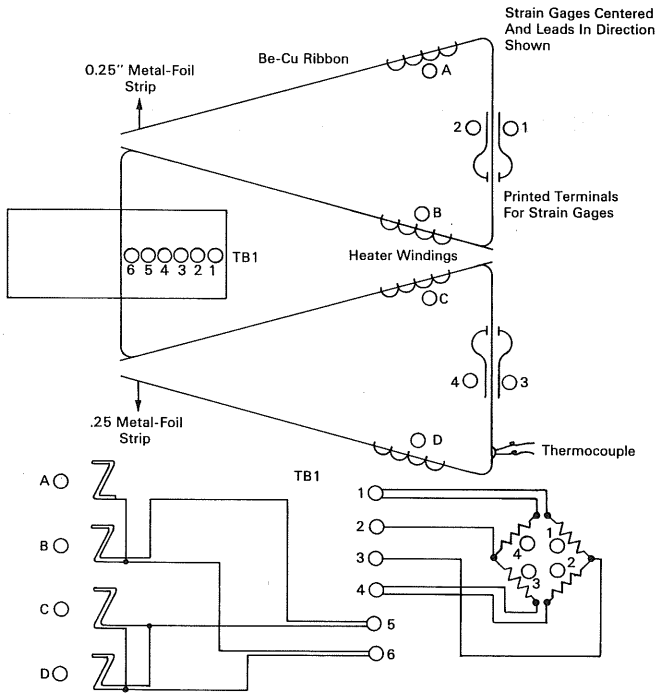

Figure 2

metal-foil strip is placed around the tank equator and secured to opposite ends of the beam. For longitudinal-deflection measurements, the metal-foil strips are affixed to tank bosses, and the cantilever-beam ends of the Bow Tie are connected to the ends of the foil strips at the midsection of the tank.

Heater wire is installed on the Bow Tie and a thermocouple is soldered to the beryllium–copper between the heater and the top strain gage.

Leads are connected from the strain gage terminals to a barrier strip which is clipped to the Bow Tie. The gages are so wired that they electrically add their output and are sensitive to a bending mode only.

The strain gages are connected to a signal conditioning unit which provides excitation voltages and transfers the output voltage to a strip chart millivolt recorder.

During operation, with the tank at cryogenic temperature, the heaters maintain the Bow Tie at a nominal 80°F and this temperature is controlled by using the output millivoltage of the thermocouple soldered to the Bow Tie. The thermocouple is connected to a recorder controller whose setting turns the heater voltage on and off, as required, to keep the Bow Tie at the nominal 80°F. In this way, the strain gages are operated at essentially room ambient temperature and no changes of gage factor occur.

Note:

Documentation for this innovation is available from:

Clearinghouse for Federal Scientific
and Technical Information
Springfield, Virginia 22151
Price $3.00
Reference: B68-10543

Technical questions may be directed to:

Technology Utilization Officer
NASA Lewis Research Center
21000 Brookpark Road
Cleveland, Ohio 44135
Reference: B68-10543

Patent status:

No patent action is contemplated by NASA.

Source: G. L. Ramos and S. Seplow
of Aerojet General
under contract to
Lewis Research Center
(LEW-10353)

NASA TECH BRIEF

NASA Tech Briefs are issued to summarize specific innovations derived from the U.S. space program, to encourage their commercial application. Copies are available to the public at 15 cents each from the Clearinghouse for Federal Scientific and Technical Information, Springfield, Virginia 22151.

Operational Integrator

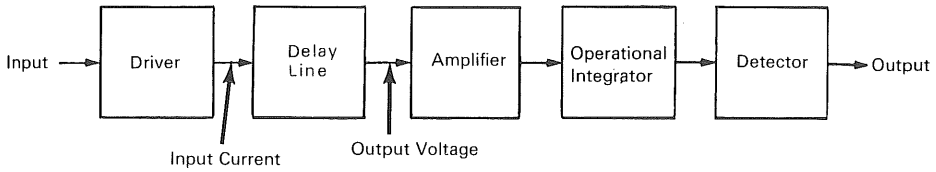

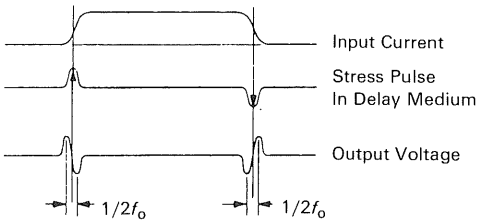

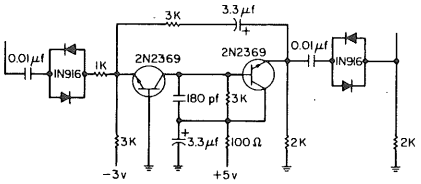

In the usual technique for storing digital information of an aperiodic nature, the information is applied to a delay medium and later retrieved in identical format. In many such techniques, transients (noise pulses) can interfere with input pulse sequence in a manner that destroys the integrity of the original information. Such unpredictable limiting conditions reduce accuracy of the retrieval of information presented to the delay line. In the past, designers chose to attenuate the problem by return-to-zero clocked pulse techniques.

The system described here operates in the nonreturn-to-zero mode, maintaining the increased bit density capability of this mode but with much higher noise immunity than conventional schemes offer. The complete system (shown in the upper figure) has a driver circuit converting input voltage pulses into current pulses of specific magnitude. These are fed into the delay line portion of the system.

Typical waveforms within ultrasonic delay lines, such as magnetorestrictive lines, glass lines or others, are shown in the lower left figure. This represents an idealized timing diagram where an input current step is applied to the launch coil, causing a mechanical stress pulse in the delay medium to propagate through the line at a certain velocity. It is to be noted that this stress pulse is proportional to the derivative of the input current step. The response of the output pickup coil to the stress pulse is a voltage waveform which is proportional to the second derivative of the input current step.

This output waveform is now (again referring to the upper figure) amplified several hundred times and fed to an operational integrator in order to present the

(continued overleaf)

This document was prepared under the sponsorship of the National Aeronautics and Space Administration. Neither the United States Government nor any person acting on behalf of the United States Government assumes any liability resulting from the use of the information contained in this document, or warrants that such use will be free from privately owned rights.

detector with a signal free of the limiting uncertainties (transient noise effects) discussed previously. The result is a more reliable and predictable system since sporadic noise transients of appreciable amplitude are largely attenuated. Additionally, a simpler detection technique can be used by feeding the positive pulses to the "set" side and the negative pulses to the "reset" side of a bistable device. In the present system, the signal is detected by a Schmitt trigger.

The operational integrator, which is the innovation in this system, is illustrated in the lower right figure and features a "dead space" generator at both input and output for the purpose of removing baseline noise. The baseline noise at the input is primarily caused by the delay line itself, while the output baseline noise is caused by dissymmetry of the input signal. This results in undesirable baseline offset and requires excessive filtering of the +5v supply in order to maintain purity of the integration process. Removal of baseline noise through the use of "dead space" generators relaxes this requirement.

Notes:

1. In tests, power supply variations in excess of ±10% resulted in no deterioration in performance.
2. The integrator described performs a mathematical integrating function on inputs from 100 Hz through 100 MHz.
3. Documentation for the innovation is available from:

   Clearinghouse for Federal Scientific
   and Technical Information
   Springfield, Virginia 22151
   Price $3.00
   Reference: B68-10547

Patent status:

This invention is owned by NASA and a patent application has been filed. Royalty-free, nonexclusive licenses for its commercial use will be granted by NASA. Inquiries concerning license rights should be made to NASA, Code GP, Washington, D.C. 20546.

Source: Erno B. Lutz
Jet Propulsion Laboratory
(NPO-10230)

NASA TECH BRIEF

NASA Tech Briefs are issued to summarize specific innovations derived from the U.S. space program, to encourage their commercial application. Copies are available to the public at 15 cents each from the Clearinghouse for Federal Scientific and Technical Information, Springfield, Virginia 22151.

Locating 'Sneak Paths" in Electrical Circuitry

EXAMPLE OF A UNIT

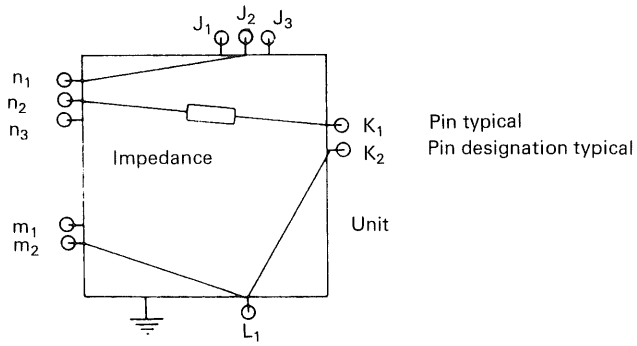

FIGURE A

EXAMPLE OF A MATRIX

	J_1	J_2	J_3	K_1	K_2	L_1	M_1	M_2	N_1	N_2	N_3
J_1	1	0	0	0	0	0	0	0	0	0	0
J_2	0	1	0	0	0	0	0	0	1	0	0
J_3	0	0	1	0	0	0	0	0	0	0	0
K_1	0	0	0	1	0	0	0	0	0	1	0
K_2	0	0	0	0	1	1	0	0	0	0	0
L_1	0	0	0	0	1	1	0	1	0	0	0
M_1	0	0	0	0	0	0	1	0	0	0	0
M_2	0	0	0	0	0	1	0	1	0	0	0
N_1	0	1	0	0	0	0	0	0	1	0	0
N_2	0	0	0	1	0	0	0	0	0	1	0
N_3	0	0	0	0	0	0	0	0	0	0	1

FIGURE B

A troublesome phenomenon in the operation of electrical circuitry is the existence of "sneak paths" that degrade performance and can, in "worst case" situations destroy circuitry. "Sneak paths" are defined as unplanned closed current paths which can be completely described by circuit diagrams within defined limits. These paths normally contain two undesirable characteristics: 1, the existence of unwanted electrical currents in these paths, and 2, the almost impossible task of locating these paths.

To attack the problem, all possible closed loops must be located. An exception to this is the technique for removing a majority of the normally designed power loops. Because it is predicted that the total number of these loops is low, the task of segregating the "sneak paths" from the normally designed power loops by direct examination of circuit diagrams is possible. Another simplification is to separate the task into two levels. The first level is the cable diagram, where each cable is considered as a single path; and the second level is the individual wire path. The first level is reduced to its lowest number of possible cable loops, while each closed wire path within these cables is recorded. Finally the "sneak paths" are separated from the designed closed loops.

One effective approach to accomplishment of the above outlined problem is the use of a matrix system wherein circuit pin connections are assigned arbitrary

(continued overleaf)

This document was prepared under the sponsorship of the National Aeronautics and Space Administration. Neither the United States Government nor any person acting on behalf of the United States Government assumes any liability resulting from the use of the information contained in this document, or warrants that such use will be free from privately owned rights.

designators and these used in formation of the matrix. Such a tool is illustrated in the figures A and B. A matrix is a format that shows the current paths passing through a "unit". This current path is defined as follows: (1) The conducting current is one mil-amp or more; (2) The impedance is 28K or less (from one end of a path to the other); (3) The frequency range is from D.C. to 1000 Hz. (4) This path is an actual part of the circuit design. It has no inductive or capacitive coupling characteristics as are often found in long cables containing many conductors.

The "unit" is the black box that normally describes electrical circuits. All the terminals in this unit are the pins of the cable attached to this unit. One possible exception to this would be the chassis ground connections.

The format (or matrix) is a rectangular representation of the possible current paths passing through a unit (Figure B). Example, to show the electrical path from pin N_2 to K_1, place the numerical "1" in the K_1 column and N_2 row. This "1" entry indicates a conducting path from N_2 to K_1 or from K_1 to N_2, according to the above definition of current paths. In noting the direction of current flow, N_2K_1 represents positive current flow (opposite electron flow) from N_2 to K_1. Various types of impedances can be listed in the matrix by replacing the 1 with the appropriate code number or letter.

The above discussion pertains to the normal matrix (or single wire paths). However, a special type of matrix is called the connector matrix. This matrix represents a cable with several conductors in one current path. If one or more current paths exist between any two cables (J and K respectively), "1" is placed in the J(th) row and K(th) column and a "1" is also placed in the K(th) row and J(th) column. In the event that a current path between cable J and cable K is nonexistent, a "0" is placed in the matrix instead of the "1". Although the present definition considers only designed current paths, this definition can be extended to include paths of all types. This is accomplished by adding code letters to represent these new energy paths, in addition to the present code letters representing impedance.

Note:

Documentation for the invention is available from:
Clearinghouse for Federal Scientific
and Technical Information
Springfield, Virginia 22151
Price $3.00
Reference: B68-10565

Patent status:

Inquiries about obtaining rights for the commercial use of this invention may be made to NASA, Code GP, Washington, D.C. 20546.

Source: Toivo M. Dannback
of The Boeing Company
under contract to
Marshall Space Flight Center
(MFS-15018)

NASA TECH BRIEF

NASA Tech Briefs are issued to summarize specific innovations derived from the U.S. space program, to encourage their commercial application. Copies are available to the public at 15 cents each from the Clearinghouse for Federal Scientific and Technical Information, Springfield, Virginia 22151.

Welding Skate with Computerized Controls

A prototype of a new welding skate concept for automatic TIG welding of contoured or double-contoured parts is being developed. It combines lightweight welding apparatus with electrical circuitry which computes the desired torch angle and positions a torch and cold-wire guide-angle manipulator. Control is maintained without contact of the work surface by mechanical, electromechanical, or photoelectric transducers. In addition, the computer circuit instantly computes the proper welding skate drive motor speed thereby correcting the skate velocity to maintain constant weld speed over contoured work surfaces. The system employs velocity and position transducers mounted remotely from the torch and work; thus, the torch and wire guide have maximum freedom to maneuver in restricted places. Of major importance is the fact that all controls for TIG welding are based on instantaneous conditions at the point of the arc rather than at a transducer mounted adjacent to the arc. The computer derives most of its input information as a result of the standard TIG welding process; so it does not interfere with, or attempt to regulate, the conventional TIG welding-process voltage and current controls.

The need for such a device arose from past attempts to automatically precision-weld contoured and double-contoured metal joints. Closed loop control transducers, whose purpose was to maintain the TIG torch and cold-wire feed at a fixed angle with respect to the work, either interfered with the process, were destroyed by heat, or were unreliable. In addition to the control problems, tooling costs were a factor in the skate development because the same equipment can be utilized to perform a multitude of welding operations with a minimum of down time. A lightweight carriage moves around the work with its associated weld manipulators, often reducing tooling costs for large weldments.

Speed control of the weld arc is vital and very difficult to achieve under conditions where the skate track and/or part is alternately curved and straight. This computer controlled skate concept compensates for large inherent mechanically induced velocity errors with a uniquely simple analog computer.

Control and computation for the torch angle and welding velocity are based on two distinct concepts. The torch angle computer solves for the instantaneous angle between tangents to the track and the work at the intersection point of the welding arc. These tangents form two sides of a right triangle. It is further demonstrated, through diagrams, that this angle is also the included angle between a line through the arc which parallels the torch voltage control manipulator actuator and a line normal to the work surface at the arc. The followup closed loop servo maintains the torch at some fixed relation to a normal erected at the point of intersection of the welding arc and the work surface. This control is accomplished by interrelating voltage analogs of the welding velocity and the torch velocity away or toward the welding skate carriage.

To compute the desired welding speed compensation, the circuit utilizes additional instantaneous voltage analogs of the radius of curvature of the skate track, the distance from the track to the work, and the cosine of the angle computed by the torch angle computer.

The advantages of computer control are numerous because of the independence of the control inputs

(continued overleaf)

This document was prepared under the sponsorship of the National Aeronautics and Space Administration. Neither the United States Government nor any person acting on behalf of the United States Government assumes any liability resulting from the use of the information contained in this document, or warrants that such use will be free from privately owned rights.

from the condition of the work surface. Large voltage analogs of the required computer inputs are easily obtained. This advantage makes the computer controls stable during welding and also economical to construct.

Note:

Documentation may be obtained from:

Clearinghouse for Federal Scientific
and Technical Information
Springfield, Virginia 22151
Price $3.00
Reference: B68-10566

Patent status:

This invention is owned by NASA and a patent application has been filed. Royalty-free, nonexclusive licenses for its commercial use will be granted by NASA. Inquiries concerning license rights should be made to NASA, Code GP, Washington, D.C. 20546.

Source: W. A. Wall, Jr. and Vaughn H. Yost
Marshall Space Flight Center
(MFS-20224)

NASA TECH BRIEF

NASA Tech Briefs are issued to summarize specific innovations derived from the U.S. space program, to encourage their commercial application. Copies are available to the public at 15 cents each from the Clearinghouse for Federal Scientific and Technical Information, Springfield, Virginia 22151.

Design of Dissipative Linear Phase Filters

The use of linear phase filters has become rather common over the past few years. Some of their applications include pulse shaping networks, amplifiers with good waveform response and low phase distortion, and amplifiers with Gaussian frequency response.

On the other hand, the design of linear phase filters is a tedious operation, especially when designing to optimize some particular characteristic of the filter, such as insertion loss.

A set of design curves has been constructed for the purpose of eliminating most of the work involved in designing linear phase filters. These curves are normalized in such a way as to apply to low-pass, band-pass, and high-pass filters of any bandwidth. While the curves are for filters with a maximum of four poles, it is possible to plot similar curves for any number "n" of poles by solving a system of "n" simultaneous equations.

The design is maximally flat delay only for low-pass filters. When the frequency variable is transformed from low-pass to band-pass or high-pass some delay distortion is introduced by the transformation. The amount of distortion may be determined from the curves. For narrow band-pass filters the distortion is negligible. For high-pass filters, it is considerable.

One disadvantage of this particular set of design curves is that they do not provide a minimum loss design for low-pass and high-pass filters. This comes about because all internal Q's are assumed to be equal. Therefore, branches which contain only a capacitor must be shunted by a resistance which introduces some loss. This loss, however, in most practical cases is insignificant.

The design of maximally flat and Chebishev type dissipative ladder filter networks by equating the coefficients of the Butterworth and Chebishev polynomials respectively to the coefficients of the transfer impedance polynomial of the network has been described by Dishal. This is accomplished by expressing the coefficients of the transfer impedance of the network in terms of the $(n-1)$ coefficients of coupling between poles and the "n" decrements of the poles. In the usual case, the internal decrements and the bandwidth are known; therefore, the net result is a system of "n" equations with $(n+1)$ unknowns; the $(n-1)$ coefficients of coupling and the first and last decrements. One of these unknowns may be specified arbitrarily, within certain limits, and the others determined from the "n" simultaneous equations that remain. For instance, it may be desirable to choose one of the elements to give a minimum (or any designated amount) of insertion loss. Taub and Bogner have published a similar set of curves for the design of 3-pole Butterworth filters for the condition of minimum insertion loss.

This paper deals primarily with a similar design for the case of 2-, 3-, and 4-pole maximally flat delay ladder networks. The Dishal network coefficients are equated to those of the nth order Bessel polynomial for maximally linear phase. This polynomial has an amplitude frequency characteristic that approaches Gaussian shape and a delay-frequency characteristic that approaches zero as "n" increases indefinitely. Of the $(n+1)$ coefficients required to specify the nth degree polynomial, one is used to adjust the gain and one is used to specify bandwidth, leaving $(n-1)$ coefficients to adjust flatness of delay.

After equating the Dishal coefficients to those of the Bessel polynomial, the resulting equations are normalized to the fractional 3 db bandwidth. Then the normalized end decrements and normalized coefficients

(continued overleaf)

This document was prepared under the sponsorship of the National Aeronautics and Space Administration. Neither the United States Government nor any person acting on behalf of the United States Government assumes any liability resulting from the use of the information contained in this document, or warrants that such use will be free from privately owned rights.

of coupling are plotted using the normalized internal decrements, all equal, as a parameter. The insertion loss curves plotted with the normalized unloaded decrement as a parameter assume, in addition, that all unloaded decrements, including the first and last are equal. The amplitude-frequency and delay-frequency curves are plotted as a function of normalized fractional bandwidth. This set of curves gives a complete solution to any valid design problem within the scope of this type of network.

Notes:

1. While the idea presented is not new, the set of curves employed is believed to be the only one of its kind in existence.
2. Documentation for the innovation is available from:

   Clearinghouse for Federal Scientific
   and Technical Information
   Springfield, Virginia 22151
   Price $3.00
   Reference: B68-10572

Patent status:

No patent action is contemplated by NASA.

Source: Richard L. Phares
of SPACO, Inc.
under contract to
Marshall Space Flight Center
(MFS-14698)